ADSP-21161N EZ-KIT Lite®
Evaluation System Manual

Revision 4.0, October 2006

Part Number
82-000530-01

Analog Devices, Inc.
One Technology Way
Norwood, Mass. 02062-9106

ANALOG DEVICES

Copyright Information

©2006 Analog Devices, Inc., ALL RIGHTS RESERVED. This document may not be reproduced in any form without prior, express written consent from Analog Devices, Inc.

Printed in the USA.

Limited Warranty

The EZ-KIT Lite evaluation system is warranted against defects in materials and workmanship for a period of one year from the date of purchase from Analog Devices or from an authorized dealer.

Disclaimer

Analog Devices, Inc. reserves the right to change this product without prior notice. Information furnished by Analog Devices is believed to be accurate and reliable. However, no responsibility is assumed by Analog Devices for its use; nor for any infringement of patents or other rights of third parties which may result from its use. No license is granted by implication or otherwise under the patent rights of Analog Devices, Inc.

Trademark and Service Mark Notice

The Analog Devices icon bar and logo, VisualDSP++, the VisualDSP++ logo, SHARC, CROSSCORE, the CROSSCORE logo, and EZ-KIT Lite are registered trademarks of Analog Devices, Inc.

All other brand and product names are trademarks or service marks of their respective owners.

Regulatory Compliance

The ADSP-21161N EZ-KIT Lite evaluation system has been certified to comply with the essential requirements of the European EMC directive 89/336/EEC (inclusive 93/68/EEC) and, therefore, carries the "**CE**" mark.

The ADSP-21161N EZ-KIT Lite evaluation system had been appended to Analog Devices Development Tools Technical Construction File referenced "DSPTOOLS1" dated December 21, 1997 and was awarded CE Certification by an appointed European Competent Body and is on file.

The EZ-KIT Lite evaluation system contains ESD (electrostatic discharge) sensitive devices. Electrostatic charges readily accumulate on the human body and equipment and can discharge without detection. Permanent damage may occur on devices subjected to high-energy discharges. Proper ESD precautions are recommended to avoid performance degradation or loss of functionality. Store unused EZ-KIT Lite boards in the protective shipping package.

CONTENTS

PREFACE

Purpose of This Manual xiv
Intended Audience xiv
Manual Contents xv
What's New in This Manual xv
Technical or Customer Support xvi
Supported Processors xvi
Product Information xvii
MyAnalog.com xvii
Processor Product Information xvii
Related Documents xviii
Online Technical Documentation xix
Accessing Documentation From VisualDSP++ xx
Accessing Documentation From Windows xx
Accessing Documentation From Web xxi
Printed Manuals xxi
VisualDSP++ Documentation Set xxi
Hardware Tools Manuals xxii
Processor Manuals xxii

Data Sheets xxii
Notation Conventions xxii

USING ADSP-21161N EZ-KIT LITE

Package Contents 1-2
Default Configuration 1-3
Installation and Session Startup 1-5
Evaluation License Restrictions 1-7
Memory Map 1-8
SDRAM Memory 1-9
Flag Pins 1-9
Interrupt Pins 1-10
Audio Interface 1-11
Example Programs 1-13
Flash Programmer Utility 1-13

ADSP-21161N EZ-KIT LITE HARDWARE REFERENCE

System Architecture 2-2
External Port 2-3
Host Processor Interface (HPI) 2-4
SPORT Audio Interface 2-4
SPI Audio Interface 2-4
JTAG Emulation Port 2-5
Switch and Jumper Settings 2-5
Clock Mode Selection Switch (SW10) 2-5

Boot Mode Selection Switch (SW11) 2-7
~BMS Enable Jumper (JP22) 2-7
SDRAM Disable Jumper (P17) 2-8
S/PDIF Selection Jumper (P2) 2-8
MCLK Selection Jumper (JP3) 2-8
FLAG0 Enable Jumper (JP1 and JP4) 2-9
FLAG1 Enable Jumper (JP5) 2-9
Sample Frequency Jumper (JP6) 2-9
ADC2 Input Mode Selection Jumpers (JP7 and JP8) 2-10
MIC Gain Selection Jumpers (JP9 and JP10) 2-10
ADC2 Input Selection Jumper (JP11) 2-10
AD1836 Control Selection Jumper (JP23) 2-11
SW1 Enable Jumper (JP26) 2-11
SW2 Enable Jumper (JP27) 2-12
Processor ID Settings 2-12
LEDs and Push Buttons 2-13
Reset LED (LED1) 2-13
FLAG LEDs (LED2–7) 2-14
VERF LED (LED12) 2-14
Power LED (LED11) 2-14
USB Monitor LED (ZLED3) 2-15
Programmable Flag Push Buttons (SW1–4) 2-15
Interrupt Push Buttons (SW5–7) 2-15
Board Reset Push Button (SW12) 2-16

Connectors 2-17
USB Connector (ZJ1) 2-17
Audio Connectors (J2–6, P4) 2-18
External Port Connector (P9) 2-18
Host Processor Interface Connector (P10) 2-19
Voltage Connector (P11) 2-19
SPORT1 and SPORT3 Connector (P12) 2-19
Link Port Connectors (P13 and P14) 2-20
Power Input Connector (P16) 2-20
SPI Connector (P18) 2-21
JTAG Connector (ZP4) 2-21
Specifications 2-22
Power Supply 2-22
Board Current Measurements 2-22

ADSP-21161N EZ-KIT LITE BILL OF MATERIALS

ADSP-21161N EZ-KIT LITE SCHEMATIC

Title Page B-1
ADSP-21161N Processor B-2
Memory B-3
S/PDIF Receiver B-4
Audio Codec B-5
Audio In 1 ..... B-6
Audio In 2 ..... B-7

Audio In MIC/LINE, Headphone Out B-8
Audio Out 1 ..... B-9
Audio Out 2 ..... B-10
Audio Out 3 ..... B-11
Audio Out 4 ..... B-12
Push Buttons B-13
LEDs, RESET, and Oscillators B-14
Connectors B-15
Power B-16

INDEX

PREFACE

Thank you for purchasing the ADSP-21161N EZ-KIT Lite®, Analog Devices, Inc. evaluation system for SHARC® digital signal processors (DSPs).

SHARC processors are based on a 32-bit super Harvard architecture that includes a unique memory architecture comprised of two large on-chip, dual-ported SRAM blocks coupled with a sophisticated IO processor, which gives a SHARC processor the bandwidth for sustained high-speed computations. SHARC processors represent today's de facto standard for floating-point processor targeted for premium audio applications.

The evaluation system is designed to be used in conjunction with the VisualDSP++® development environment to test the capabilities of ADSP-21161N SHARC processors. The VisualDSP++ development environment gives you the ability to perform advanced application code development and debug, such as:

- Create, compile, assemble, and link application programs written in C++, C, and ADSP-21161N assembly
- Load, run, step, halt, and set breakpoints in application programs
- Read and write data and program memory
- Read and write core and peripheral registers
- Plot memory

Access to the ADSP-21161N processor from a personal computer (PC) is achieved through a USB port or an optional JTAG emulator. The USB interface provides unrestricted access to the ADSP-21161N processor and the evaluation board peripherals. Analog Devices JTAG emulators offer faster communication between the host PC and target hardware. Analog Devices carries a wide range of in-circuit emulation products. To learn more about Analog Devices emulators and processor development tools, go to http://www.analog.com/dsp/tools/.

The ADSP-21161N EZ-KIT Lite provides example programs to demonstrate the capabilities of the evaluation board.

The ADSP-21161N EZ-KIT Lite installation is part of the VisualDSP++ installation. The EZ-KIT Lite is a licensed product that offers an unrestricted evaluation license for the first 90 days. For details about evaluation license restrictions after the 90 days, refer to "Evaluation License Restrictions" on page 1-7.

The board features:

- Analog Devices ADSP-21161N SHARC processor
  - 100 MHz core clock speed
  - Configurable core clock switch
- Analog Devices AD1836 96 kHz audio codec
  - Jumper selectable line-in or mic-in 3.5 mm stereo jack
  - Line-out 3.5 mm stereo jack
  - Four RCA jacks for audio input
  - Eight RCA jacks for audio output
- Analog Devices AD1852 192 kHz auxiliary digital-to-analog converter (DAC)

- Crystal Semiconductor CS8416 192 kHz Sony/Philips Digital Interface Format (SPDIF) receiver
  - Optical and coaxial connectors for SPDIF input
- Flash memory
  - 512K x 8-bits
- Synchronous dynamic random access memory (SDRAM)
  - 48 MB (8M x 48 bit)
- Interface connectors
  - 14-pin emulator connector for JTAG interface
  - SPORT connectors
  - Link port 0 and link port 1
  - External port connectors (not populated)
- General-purpose IO
  - Four push button flags
  - Three push button interrupts
  - Six LED outputs
- Analog Devices ADP1864, ADP3338 and ADP3339 voltage regulators

The EZ-KIT Lite board has a flash memory device that can be used to store user-specific boot code. By configuring the switch for EPROM boot, the board can run as a stand-alone unit. The ADSP-21161N EZ-KIT Lite package contains a flash programmer utility, which allows you to program the flash memory. The "Flash Programmer Utility" on page 1-13.

SPORT0 and SPORT2 connect to the audio codec, facilitating creation of audio-signal processing applications. SPORT1 and SPORT3 connect to off-board connectors of other serial devices.

Additionally, the EZ-KIT Lite board provides un-installed expansion connector footprints to connect to the processor's external port (EP) and host processor interface (HPI).

Purpose of This Manual

The *ADSP-21161N EZ-KIT Lite Evaluation System Manual* provides instructions for installing the product hardware (board) and describes the operation and configuration of the board components. The product software component is detailed in the *VisualDSP++ Installation Quick Reference Card*. The manual provides guidelines for running your own code on the ADSP-21161N EZ-KIT Lite. Finally, a schematic and a bill of materials are provided as a reference for future designs.

Intended Audience

The primary audience for this manual is a programmer who is familiar with Analog Devices processors. This manual assumes that the audience has a working knowledge of the appropriate processor architecture and instruction set. Programmers who are unfamiliar with Analog Devices processors can use this manual but should supplement it with other texts (such as the *ADSP-21161 SHARC Processor Hardware Reference* and *ADSP-21160 SHARC Processor Instruction Set Reference*) that describe your target architecture.

Programmers who are unfamiliar with VisualDSP++ should refer to the VisualDSP++ online Help and the VisualDSP++ user's or getting started guides. For the locations of these documents, see "Related Documents" on page -xviii.

Manual Contents

The manual consists of:

- Chapter 1, "Using ADSP-21161N EZ-KIT Lite" on page 1-1
  Provides information on the EZ-KIT Lite from a programmer's perspective and provides a simplified memory map.
- Chapter 2, "ADSP-21161N EZ-KIT Lite Hardware Reference" on page 2-1
  Provides information on the hardware aspects of the evaluation system.
- Appendix A, "ADSP-21161N EZ-KIT Lite Bill Of Materials" on page A-1
  Provides a list of components used to manufacture the EZ-KIT Lite board.
- Appendix B, "ADSP-21161N EZ-KIT Lite Schematic" on page B-1
  Provides the resources to allow EZ-KIT Lite board-level debugging or to use as a reference design.

Appendix B now is part of the online Help. The PDF version of the *ADSP-21161N EZ-KIT Lite Evaluation System Manual* is located in the `Docs\EZ-KIT Lite Manuals` folder on the installation CD. Alternatively, the book can be found on the Analog Devices Web site, `www.analog.com/processors`.

What's New in This Manual

This edition of the *ADSP-21161N EZ-KIT Lite Evaluation System Manual* documents the ADSP-21161N EZ-KIT Lite compliance with the RoHS and WEEE directives.

Technical or Customer Support

You can reach Analog Devices, Inc. Customer Support in the following ways:

- Visit the Embedded Processing and DSP products Web site at
  `http://www.analog.com/processors/technicalSupport`
- E-mail tools questions to
  `processor.tools.support@analog.com`
- E-mail processor questions to
  `processor.support@analog.com (World wide support)`
  `processor.europe@analog.com (Europe support)`
  `processor.china@analog.com (China support)`
- Phone questions to **1-800-ANALOGD**
- Contact your Analog Devices, Inc. local sales office or authorized distributor
- Send questions by mail to:
  `Analog Devices, Inc.`
  `One Technology Way`
  `P.O. Box 9106`
  `Norwood, MA 02062-9106`
  `USA`

Supported Processors

This EZ-KIT Lite evaluation system supports Analog Devices ADSP-21161N SHARC processors.

Product Information

You can obtain product information from the Analog Devices Web site, from the product CD-ROM, or from printed publications (manuals).

Analog Devices is online at www.analog.com. Our website provides information about a broad range of products—analog integrated circuits, amplifiers, converters, and digital signal processors.

MyAnalog.com

MyAnalog.com is a free feature of the Analog Devices Web site that allows customization of a Web page to display only the latest information on products you are interested in. You can also choose to receive weekly e-mail notifications containing updates to the Web pages that meet your interests. MyAnalog.com provides access to books, application notes, data sheets, code examples, and more.

Registration:

Visit www.analog.com to sign up. Click **Register** to use MyAnalog.com. Registration takes about five minutes and serves as means for you to select the information you want to receive.

If you are already a registered user, just log on. Your user name is your e-mail address.

Processor Product Information

For information on embedded processors and DSPs, visit our Web site at www.analog.com/processors, which provides access to technical publications, data sheets, application notes, product overviews, and product announcements.

You may also obtain additional information about Analog Devices and its products in any of the following ways.

- E-mail questions or requests for information to
  processor.support@analog.com (World wide support)
  processor.europe@analog.com (Europe support)
  processor.china@analog.com (China support)
- Fax questions or requests for information to
  1-781-461-3010 (North America)
  +49-89-76903-157 (Europe)

Related Documents

For information on product related development software, see the following publications.

Table 1. Related Processor Publications

Title	Description
ADSP-21161N DSP Data Sheet	General functional description, pinout, and timing
ADSP-21161 SHARC Processor Hardware Reference	Description of internal processor architecture, registers, and all peripheral functions
ADSP-21160 SHARC Processor Instruction Set Reference	Description of all allowed processor assembly instructions

Table 2. Related VisualDSP++ Publications

Title	Description
VisualDSP++ User's Guide	Description of VisualDSP++ features and usage
VisualDSP++ Assembler and Preprocessor Manual	Description of the assembler function and commands
VisualDSP++ C/C++ Complier and Library Manual for SHARC Processors	Description of the complier function and commands for SHARC processors

Table 2. Related VisualDSP++ Publications (Cont'd)

Title	Description
VisualDSP++ Linker and Utilities Manual	Description of the linker function and commands
VisualDSP++ Loader and Utilities Manual	Description of the loader function and commands

The listed documents can be found through online Help or in the `Docs` folder of your VisualDSP++ installation. Most documents are available in printed form.

If you plan to use the EZ-KIT Lite board in conjunction with a JTAG emulator, also refer to the documentation that accompanies the emulator.

All documentation is available online. Most documentation is available in printed form.

Visit the Technical Library Web site to access all processor and tools manuals and data sheets:
`http://www.analog.com/processors/technicalSupport/technicalLibrary/`.

Online Technical Documentation

Online documentation comprises the VisualDSP++ Help system, software tools manuals, hardware tools manuals, processor manuals, the Dinkum Abridged C++ library, and Flexible License Manager (FlexLM) network license manager software documentation. You can easily search across the entire VisualDSP++ documentation set for any topic of interest. For easy printing, supplementary `.pdf` files of most manuals are provided in the `Docs` folder on the VisualDSP++ installation CD.

Each documentation file type is described as follows.

File	Description
`.chm`	Help system files and manuals in Help format
`.htm` or `.html`	Dinkum Abridged C++ library and FlexLM network license manager software documentation. Viewing and printing the `.html` files requires a browser, such as Internet Explorer 5.01 (or higher).
`.pdf`	VisualDSP++ and processor manuals in Portable Documentation Format (PDF). Viewing and printing the `.pdf` files requires a PDF reader, such as Adobe Acrobat Reader (4.0 or higher).

If documentation is not installed on your system as part of the software installation, you can add it from the VisualDSP++ CD at any time by running the Tools installation. Access the online documentation from the VisualDSP++ environment, Windows® Explorer, or the Analog Devices Web site.

Accessing Documentation From VisualDSP++

To view VisualDSP++ Help, click on the **Help** menu item or go to the Windows task bar and navigate to the VisualDSP++ documentation via the **Start** menu.

To view ADSP-21161N EZ-KIT Lite Help, which is part of the VisualDSP++ Help system, use the **Contents** or **Search** tab of the Help window.

Accessing Documentation From Windows

In addition to any shortcuts you may have constructed, there are many ways to open VisualDSP++ online Help or the supplementary documentation from Windows.

Help system files (`.chm`) are located in the `Help` folder, and `.pdf` files are located in the `Docs` folder of your VisualDSP++ installation CD-ROM. The `Docs` folder also contains the Dinkum Abridged C++ library and the FlexLM network license manager software documentation.

Your software installation kit includes online Help as part of the Windows® interface. These help files provide information about VisualDSP++ and the ADSP-21161N EZ-KIT Lite evaluation system.

Accessing Documentation From Web

Download manuals at the following Web site: http://www.analog.com/processors/technicalSupport/technicalLibrary/.

Select a processor family and book title. Download archive (`.zip`) files, one for each manual. Use any archive management software, such as WinZip, to decompress downloaded files.

Printed Manuals

For general questions regarding literature ordering, call the Literature Center at **1-800-ANALOGD** (**1-800-262-5643**) and follow the prompts.

VisualDSP++ Documentation Set

To purchase VisualDSP++ manuals, call **1-603-883-2430**. The manuals may be purchased only as a kit.

If you do not have an account with Analog Devices, you are referred to Analog Devices distributors. For information on our distributors, log onto http://www.analog.com/salesdir/continent.asp.

Hardware Tools Manuals

To purchase EZ-KIT Lite and in-circuit emulator (ICE) manuals, call **1-603-883-2430**. The manuals may be ordered by title or by product number located on the back cover of each manual.

Processor Manuals

Hardware reference and instruction set reference manuals may be ordered through the Literature Center at **1-800-ANALOGD** (**1-800-262-5643**), or downloaded from the Analog Devices Web site. Manuals may be ordered by title or by product number located on the back cover of each manual.

Data Sheets

All data sheets (preliminary and production) may be downloaded from the Analog Devices Web site. Only production (final) data sheets (Rev. 0, A, B, C, and so on) can be obtained from the Literature Center at **1-800-ANALOGD** (**1-800-262-5643**); they also can be downloaded from the Web site.

To have a data sheet faxed to you, call the Analog Devices Faxback System at **1-800-446-6212**. Follow the prompts and a list of data sheet code numbers will be faxed to you. If the data sheet you want is not listed, check for it on the Web site.

Notation Conventions

Text conventions used in this manual are identified and described as follows.

Additional conventions, which apply only to specific chapters, may appear throughout this document.

Example	Description
Close command (**File** menu)	Titles in reference sections indicate the location of an item within the VisualDSP++ environment's menu system (for example, the **Close** command appears on the **File** menu).
`{this | that}`	Alternative required items in syntax descriptions appear within curly brackets and separated by vertical bars; read the example as `this` or `that`. One or the other is required.
`[this | that]`	Optional items in syntax descriptions appear within brackets and separated by vertical bars; read the example as an optional `this` or `that`.
`[this,…]`	Optional item lists in syntax descriptions appear within brackets delimited by commas and terminated with an ellipse; read the example as an optional comma-separated list of `this`.
`.SECTION`	Commands, directives, keywords, and feature names are in text with `letter gothic` font.
`filename`	Non-keyword placeholders appear in text with italic style format.
	Note: For correct operation, ... A Note provides supplementary information on a related topic. In the online version of this book, the word **Note** appears instead of this symbol.
	Caution: Incorrect device operation may result if ... **Caution:** Device damage may result if ... A Caution identifies conditions or inappropriate usage of the product that could lead to undesirable results or product damage. In the online version of this book, the word **Caution** appears instead of this symbol.
	Warning: Injury to device users may result if ... A Warning identifies conditions or inappropriate usage of the product that could lead to conditions that are potentially hazardous for the devices users. In the online version of this book, the word **Warning** appears instead of this symbol.

1 USING ADSP-21161N EZ-KIT LITE

This chapter provides specific information to assist you with development of programs for the ADSP-21161N EZ-KIT Lite evaluation system.

The information appears in the following sections.

- "Package Contents" on page 1-2
  Lists the items contained in the ADSP-21161N EZ-KIT Lite package.
- "Default Configuration" on page 1-3
  Shows the default configuration of the ADSP-21161N EZ-KIT Lite.
- "Installation and Session Startup" on page 1-5
  Instructs how to start a new or open an existing ADSP-21161N EZ-KIT Lite session using VisualDSP++.
- "Evaluation License Restrictions" on page 1-7
  Describes the restrictions of the VisualDSP++ license shipped with the EZ-KIT Lite.
- "Memory Map" on page 1-8
  Defines the memory map of the ADSP-21161N EZ-KIT Lite.
- "SDRAM Memory" on page 1-9·
  Describes the synchronous dynamic random access memory (SDRAM) settings.
- "Flag Pins" on page 1-9
  Describes the board's flag pins.

- "Interrupt Pins" on page 1-10
  Describes the board's interrupt pins.
- "Audio Interface" on page 1-11
  Describes the board's audio interface.
- "Example Programs" on page 1-13
  Provides information about example programs included in the ADSP-21161N EZ-KIT Lite.
- "Flash Programmer Utility" on page 1-13
  Provides information on the Flash Programmer utility included with the EZ-KIT Lite software.

For information on the graphical user interface, including the boot loading, target options, and other facilities of the EZ-KIT Lite system, refer to the online Help.

For detailed information on how to program the ADSP-21161N SHARC processor, refer to the documents referenced in "Related Documents".

Package Contents

Your ADSP-21161N EZ-KIT Lite evaluation system package contains the following items.

- ADSP-21161N EZ-KIT Lite board
- *VisualDSP++ Installation Quick Reference Card*

- CD containing:
  - VisualDSP++ software
  - ADSP-21161N EZ-KIT Lite debug software
  - USB driver files
  - Example programs
  - *ADSP-21161N EZ-KIT Lite Evaluation System Manual* (this document)
- Universal 7V DC power supply
- USB 2.0 cable
- Registration card (please fill out and return)

If any item is missing, contact the vendor where you purchased your EZ-KIT Lite or contact Analog Devices, Inc.

Default Configuration

The EZ-KIT Lite evaluation system contains ESD (electrostatic discharge) sensitive devices. Electrostatic charges readily accumulate on the human body and equipment and can discharge without detection. Permanent damage may occur on devices subjected to high-energy discharges. Proper ESD precautions are recommended to avoid performance degradation or loss of functionality. Store unused EZ-KIT Lite boards in the protective shipping package.

The ADSP-21161N EZ-KIT Lite board is designed to run outside your personal computer as a stand-alone unit. You do not have to open your computer case.

To connect the EZ-KIT Lite board:

1. Remove the EZ-KIT Lite board from the package. Be careful when handling the board to avoid the discharge of static electricity, which may damage some components.

2. Figure 1-1 shows the default jumper settings, switches, connector locations, and LEDs used in installation. Confirm that your board is set up in the default configuration before continuing.

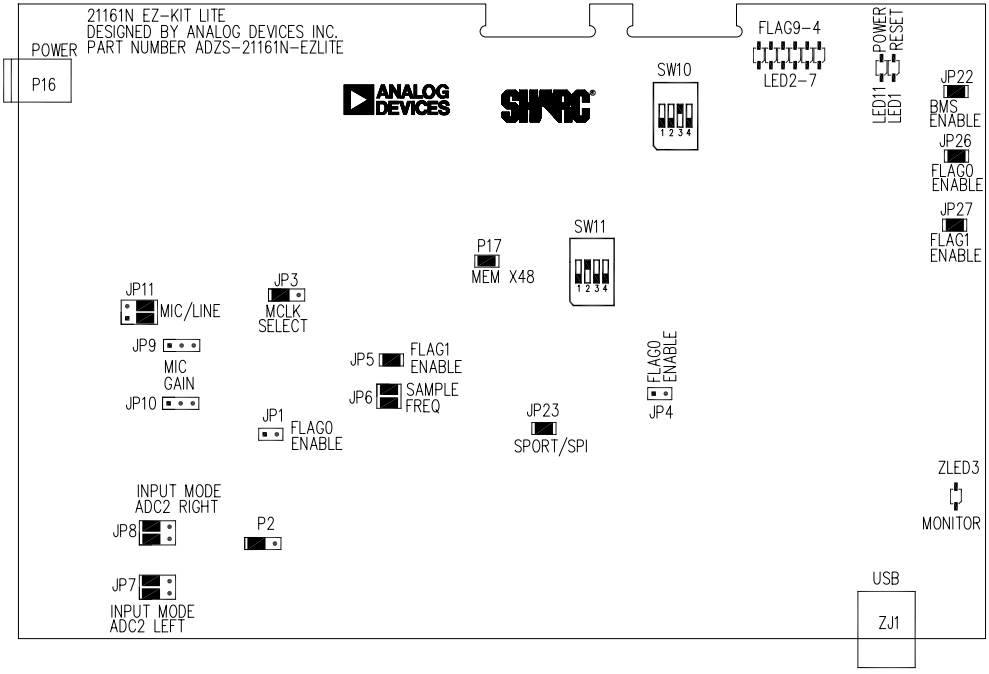

Figure 1-1. EZ-KIT Lite Hardware Setup

3. Plug the provided power supply into P16 on the EZ-KIT Lite board. Visually verify that the green power LED (LED11) is on. Also verify that the red reset LED (LED1) goes on for a moment and then goes off, and, finally, LED2 through LED8 are sequentially blinking.
4. Connect one end of the USB cable to an available full speed USB port on your PC and the other end to ZJ1 on the ADSP-21161N EZ-KIT Lite board.

Installation and Session Startup

For correct operation, install the software and hardware in the order presented in the *VisualDSP++ Installation Quick Reference Card*.

1. Verify that the yellow USB monitor LED (ZLED3, located near the USB connector) is lit. This signifies that the board is communicating properly with the host PC and is ready to run VisualDSP++.
2. If you are running VisualDSP++ for the first time, navigate to the VisualDSP++ environment via the **Start** –> **Programs** menu. The main window appears. Note that VisualDSP++ does not connect to any session. Skip the rest of this step to step 3.

   If you have run VisualDSP++ previously, the last opened session appears on the screen. You can override the default behavior and force VisualDSP++ to start a new session by pressing and holding down the **Ctrl** key while starting VisualDSP++. Do not release the **Ctrl** key until the **Session Wizard** appears on the screen. Go to step 4.

3. To connect to a new EZ-KIT Lite session, start **Session Wizard** by selecting one of the following.
   - From the **Session** menu, **New Session**.
   - From the **Session** menu, **Session List**. Then click **New Session** from the **Session List** dialog box.
   - From the **Session** menu, **Connect to Target**. Then click **New Session** from the **Session List** dialog box.
4. The **Select Processor** page of the wizard appears on the screen. Ensure **SHARC** is selected in **Processor family**. In **Choose a target processor**, select **ADSP-21161N**. Click **Next**.
5. The **Select Connection Type** page of the wizard appears on the screen. Select **EZ-KIT Lite** and click **Next**.
6. The **Select Platform** page of the wizard appears on the screen. In the **Select your platform** list, select **ADSP-21161N EZ-KIT Lite via Debug Agent**. In **Session name**, highlight or specify the session name.

   The session name can be a string of any length; although, the box displays approximately 32 characters. The session name can include space characters. If you do not specify a session name, VisualDSP++ creates a session name by combining the name of the selected platform with the selected processor. The only way to change a session name later is to delete the session and to open a new session.

   Click **Next**.

7. The **Finish** page of the wizard appears on the screen. The page displays your selections. If you are satisfied, click **Finish**. If not, click **Back** to make changes.

To disconnect from a session, click the disconnect button or select **Session –> Disconnect from Target**.

To delete a session, select **Session –> Session List**. Select the session name from the list and click **Delete**. Click **OK**.

Evaluation License Restrictions

The ADSP-21161N EZ-KIT Lite installation is part of the VisualDSP++ installation. The EZ-KIT Lite is a licensed product that offers an unrestricted evaluation license for the first 90 days. Once the initial unrestricted 90-day evaluation license expires:

- VisualDSP++ allows a connection to the ADSP-21161N EZ-KIT Lite via the USB Debug Agent interface only. Connections to simulators and emulation products are no longer allowed.
- The linker restricts a users program to 5K words of internal memory for code space with no restrictions for data space.

Refer to the *VisualDSP++ Installation Quick Reference Card* for details.

Memory Map

The ADSP-21161N processor includes 1 MB of internal SRAM for program storage or data storage. The configuration of internal SRAM is detailed in the *ADSP-21161 SHARC Processor Hardware Reference*.

The ADSP-21161N EZ-KIT Lite board contains 512K x 8-bits of external flash memory. The flash memory connects to the processors's ~MS1 and ~BMS memory select pins. The flash memory can be accessed in either the boot memory space or the external memory space. The external memory interface also connects to three 8M x 16-bit synchronous dynamic random access memory (SDRAM). The SDRAM memory connects to the ~MS0 memory select pin.

Table 1-1. EZ-KIT Lite Evaluation Board Memory Map

	Start Address	End Address	Content
Internal Memory	0x0000 0000	0x0001 FFFF	IOP registers (internal)
	0x0002 0000	0x0002 1FFF	Block 0 long word addressing
	0x0002 8000	0x0002 9FFF	Block 1 long word addressing
	0x0004 0000	0x0004 3FFF	Block 0 normal word addressing
	0x0005 0000	0x0005 3FFF	Block 1 normal word addressing
	0x0008 0000	0x0008 7FFF	Block 0 short word addressing
	0x000A 0000	0x000A 7FFF	Block 1 short word addressing
	0x0010 0000	0x001F FFFF	Multiprocessor memory space
External Memory	0x0020 0000	0x009F FFFF	External memory space bank 0 (SDRAM)
	0x0400 0000	0x0407 FFFF	External memory space bank 1 (flash)
	0x0800 0000	0x0BFF FFFF	External memory space bank 2
	0x0C00 0000	0x0FFF FFFF	External memory space bank 3

SDRAM Memory

The SDRAM memory connects to the SDRAM controller of the processor. A set of programmable timing parameters is available to configure the SDRAM banks to support slower memory accesses. Care must be taken when configuring the SDRAM control registers. For more information regarding the setup of the SDRAM controller, please refer to the *ADSP-21161 SHARC Processor Hardware Reference*. An example program is included in the EZ-KIT Lite installation directory to demonstrate the SDRAM setup.

When you are in a VisualDSP++ session connected to the ADSP-21161N EZ-KIT Lite board, the SDRAM registers are configured automatically through the debugger each time the processor is reset. Clearing the **Auto configure external memory** check box on the **Target Options** dialog box, which is accessible through the **Settings** pull-down menu, disables this feature. For more information see the online Help.

Flag Pins

The ADSP-21161N processor holds twelve asynchronous flag IO pins. Ten of these pins (`FLAG0-9`) are available for interaction with the running program.

After the processor is reset, the flags are configured as inputs. The directions of the flags are configured though the `MODE2` register and are set and read though the `FLAGS` registers. The `FLAGS` registers are summarized in Table 1-2. For more information on flags, refer to the *ADSP-21161 SHARC Processor Hardware Reference.*

Table 1-2. FLAG Pin Summary

FLAG[1]	Connects To	Description
FLAG0	SW1/AD1836_SPI_SELECT	FLAG0 connects to push button SW1 for user input and to the SPI select pins of the AD1836 audio codec and CS8416 S/PDIF receiver
FLAG1	SW2/AD1852_SPI_SELECT	FLAG1 connects to push button SW2 for user input and to the SPI select pin of the AD1852 auxiliary DAC.
FLAG2	SW3	FLAG2 connects to push button SW3 for user input.
FLAG3	SW4	FLAG3 connects to push button SW4 for user input.
FLAG4-9	LED2-7	FLAG4-9 connect to LEDs of the EZ-KIT Lite board and are for user output.
FLAG10 and FLAG11	Not connected	Not available

1 FLAG0-3 are available on connector P10.

Interrupt Pins

The ADSP-21161N processor holds three interrupt pins (IRQ0-2) that let you interact with the running program. Each of the three external interrupts is accessible directly through the push button switches SW5-7 of the EZ-KIT Lite board. Interrupt pins are summarized in Table 1-3. For more information, refer to the *ADSP-21161 SHARC Processor Hardware Reference*.

Table 1-3. Interrupt Pin Summary

Interrupt[1]	Connects To	Description
IRQ0	SW5	IRQ0-2 connect to the push buttons and supply feedback for program execution. For instance, you can write your code to trigger a flag when a routine is complete.
IRQ1	SW6	
IRQ2	SW7	

1 IRQ0-3 are available on connector P10.

Audio Interface

The audio interface consists of the AD1836 audio codec, the AD1852 auxiliary digital-to-analog converters (DACs) and the CS8416 Sony/Philips Digital Interface Format (S/PDIF) receiver. SPORT0 and SPORT2 connect to the audio devices and provide three channels of stereo input (one channel digital, two channels analog) and four channels of stereo output.

Analog audio input is facilitated by a 3.5 mm stereo jack (J3) and four RCA mono jacks (J2). One of the AD1836 stereo input channels is dedicated to two of the RCA mono jacks. The other stereo input channels can either be supplied by the 3.5 mm stereo jack or the other two RCA mono jacks. JP11 determines which jack is used for audio input. Digital audio input can be provided on either a single RCA mono jack (J6) or an optical input connector (P4). P2 determines the source. Three of the stereo output channels come from the AD1836, while the final channel is from the AD1852. See "Audio Connectors (J2–6, P4)" on page 2-18 for more information about the connectors.

The AD1836 multi-channel codec features six digital-to-analog converters and four analog-to-digital converters (ADCs) and supports multiple digital stereo channels with 24-bit conversion resolution and a 96 kHz sample rate. The AD1836 features a 108 dB dynamic range for each of its six DACs and a 104 dB dynamic range for its four ADCs. The AD1836 is

configured through an SPI port. The ADSP-21161N processor is capable of accessing the AD1836's SPI port through the SPI port as well as through SPORT1. For more information, see "AD1836 Control Selection Jumper (JP23)" on page 2-11.

The AD1852 is a complete 18/20/24-bit single-chip stereo digital audio playback system. It is comprised of a multibit sigma-delta modulator, digital interpolation filters, and analog output drive circuitry. Other features include an on-chip stereo attenuator and mute, programmed through an SPI-compatible serial control port. The AD1852 is fully compatible with all known DVD formats, including 192 kHz and 96 kHz sample frequencies and 24 bits. It also is backwards compatible by supporting 50/15µs digital de-emphasis intended for "redbook" compact discs, as well as de-emphasis at 32 kHz and 48 kHz sample rate.

The CS8416 is a monolithic CMOS device that receives and decodes audio data up to 192 kHz, according to the AES3, IEC60958, S/PDIF, and EIAJ CP1201 interface standards. The CS8416 receives data from a transmission line, recovers the clock and synchronization signals, and de-multiplexes the audio and digital data. The CS8416 is setup to operate in SPI interface compatible mode.

The MICROPHONE and LINE-IN jacks connect to the left and right ADC2 channels on the AD1836, depending on the jumper settings. See "MIC Gain Selection Jumpers (JP9 and JP10)" on page 2-10 and "ADC2 Input Selection Jumper (JP11)" on page 2-10 for more information. Two RCA jacks connect to ADC2 on the AD1836. This input is configured though the input mode selection jumpers (see "ADC2 Input Mode Selection Jumpers (JP7 and JP8)" on page 2-10 for more information).

The LINE-OUT jacks connect to the left and right DAC outputs of the AD1836 and AD1852.

The CS8416 includes an error flag (VERF) to indicate that the audio output may not be valid. This signal connects to a LED (LED12) on the board and also can be used by interpolation filters to provide error correction.

Example Programs

Example programs are provided with the ADSP-21161N EZ-KIT Lite to demonstrate various capabilities of the evaluation board. These programs are installed with the EZ-KIT Lite software and can be found in the `…\211xx\Examples\ADSP-21161 EZ-KIT Lite` subdirectory of the VisualDSP++ installation directory. Please refer to the readme file provided with each example for more information.

Flash Programmer Utility

The ADSP-21161N EZ-KIT Lite evaluation system includes a Flash Programmer utility. The utility allows you to program the flash memory on the EZ-KIT Lite. The Flash Programmer is installed with VisualDSP++. Once the utility is installed, it is accessible from the **Tools** pull-down menu.

For more information on the Flash Programmer utility, go to online Help.

2 ADSP-21161N EZ-KIT LITE HARDWARE REFERENCE

This chapter describes the hardware design of the ADSP-21161N EZ-KIT Lite board. The following topics are covered.

- "System Architecture" on page 2-2
  Describes the configuration of the ADSP-21161N EZ-KIT Lite board and explains how the board components interface with the processor.
- "Switch and Jumper Settings" on page 2-5
  Shows the location and describes the function of the on-board switches and jumpers.
- "LEDs and Push Buttons" on page 2-13
  Shows the location and describes the function of the LEDs and push buttons.
- "Connectors" on page 2-17
  Shows the location and provides the part number for the on-board connectors. Also, the manufacturer and part number information is given for the mating parts.
- "Specifications" on page 2-22
  Provides the requirements for powering the board.

System Architecture

This section describes the processor's configuration on the EZ-KIT Lite board.

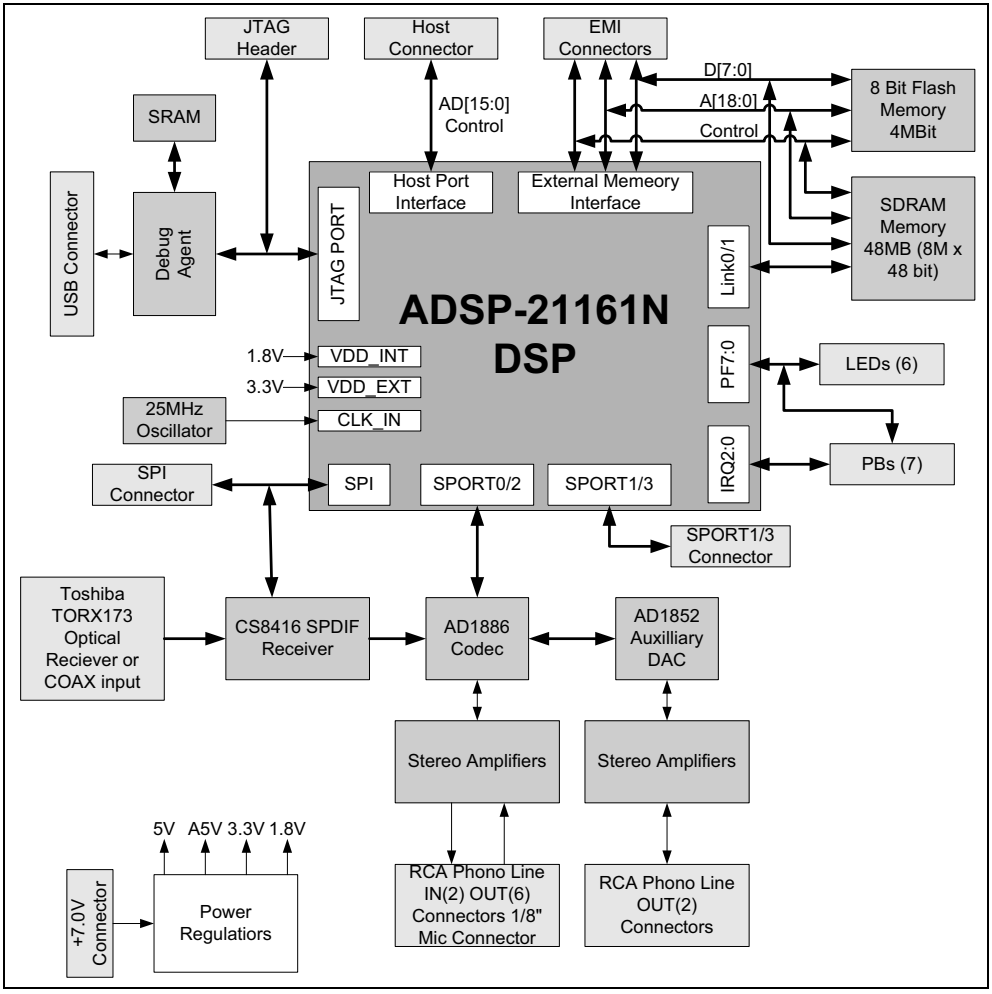

Figure 2-1. System Architecture Block Diagram

The ADSP-21161N processor's core voltage is 1.8V, the external (IO) interface voltage is 3.3V.

A 25 MHz through-hole oscillator supplies the input clock to the processor. Footprints are provided on the board for a surface-mount oscillator and a through-hole crystal for alternate user-installed clocks. The speed at which the core operates is determined by the location of the clock mode switch (SW10) as described in "Clock Mode Selection Switch (SW10)" on page 2-5 and Table 2-1. By default, the processor core runs at 100 MHz.

Table 2-1. ADSP-21161N EZ-KIT Lite Clock Modes

CLKDBL	CLK_CFG1	CLK_CFG0	Core Clock Ratio	EP Clock Ratio
OFF	ON	ON	2:1	1X
OFF	ON	OFF	3:1	1X
OFF	**OFF**	**ON**	**4:1**	**1X (default)**
ON	ON	ON	4:1	2X
ON	ON	OFF	6:1	2X
ON	OFF	ON	8:1	2X

External Port

The external port (EP) of the processor connects to a 512K x 8-bit flash memory. The flash memory connects to the boot memory select (~BMS) pin and the memory select 1 (~MS1) pin. The connection allows the flash memory to be used to boot the processor as well as to store information during normal operation.

The external memory interface also connects to 48 MB (8M x 48 bit) SDRAM memory. The SDRAM memory connects to the memory select 0 (~MS0) pin. Refer to "SDRAM Disable Jumper (P17)" on page 2-8 for

information on how to configure the width of the SDRAM. Refer to "SDRAM Memory" on page 1-9 for a summary of the processor's memory map.

Some of the address, data, and control signals are available externally via two off-board connectors. The EP connector pinout (P9 and P10) can be found in "ADSP-21161N EZ-KIT Lite Schematic" on page B-1.

Host Processor Interface (HPI)

The host port interface (HPI) signals are brought to an unpopulated off-board connector (P10). This allows the HPI to interface with a user application. The pinout of the host port connector can be found in "ADSP-21161N EZ-KIT Lite Schematic" on page B-1.

SPORT Audio Interface

SPORT0 and SPORT2 connect to the AD1836 codec (U10). A 3.5 mm stereo jack and four RCA mono jacks facilitate an audio input, while a 3.5 mm stereo jack and eight RCA mono jacks facilitate an audio output.

The codec contains two input channels. One channel connects to a 3.5 mm stereo jack and two RCA jacks. The 3.5 mm stereo jack connects to a microphone. The two RCA jacks can connect to a LINE_OUT from an audio device. You can supply an audio input to the codec microphone input channel (MIC1) or to the LINE-IN input channel. The JP11 jumper settings determine whether the LINE-IN channel of the codec is driven by connector J2 or J3.

SPI Audio Interface

The serial port connector (SPI) connects to the AD1836, AD1852, and the S/PDIF receiver (CS8416). The SPI port is used for writing and reading the control registers of the audio devices.

JTAG Emulation Port

The JTAG emulation port allows an emulator to access the processor's internal and external memory, as well as the special function registers, through a 14-pin header.

For a detailed description of the interface connectors, see *EE-68* published on the Analog Devices Web site (go to `http://www.analog.com` and search for *EE-68*). For more information about the JTAG connection, see "JTAG Connector (ZP4)" on page 2-21. For more information about available emulators, contact Analog Devices as discussed in "Product Information".

Switch and Jumper Settings

This section describes the function of the on-board switches and jumpers; Figure 2-2 shows the locations of the switches and jumpers.

Clock Mode Selection Switch (SW10)

The `SW10` switch controls the speed of the core and external port of the ADSP-21161N processor. The frequency supplied to the `CLKIN` signal of the processor can be changed. To change the frequency, remove the 25 MHz oscillator (`U24`) that is shipped with the board and replace the oscillator with a different oscillator or crystal (`Y2`). A clock mode and frequency must be selected so that the minimum and maximum specifications of the ADSP-21161N processor are not exceeded.

For more information about the clock modes, see the *ADSP-21161 SHARC Processor Hardware Reference*. Table 2-2 shows the `SW10` switch settings.

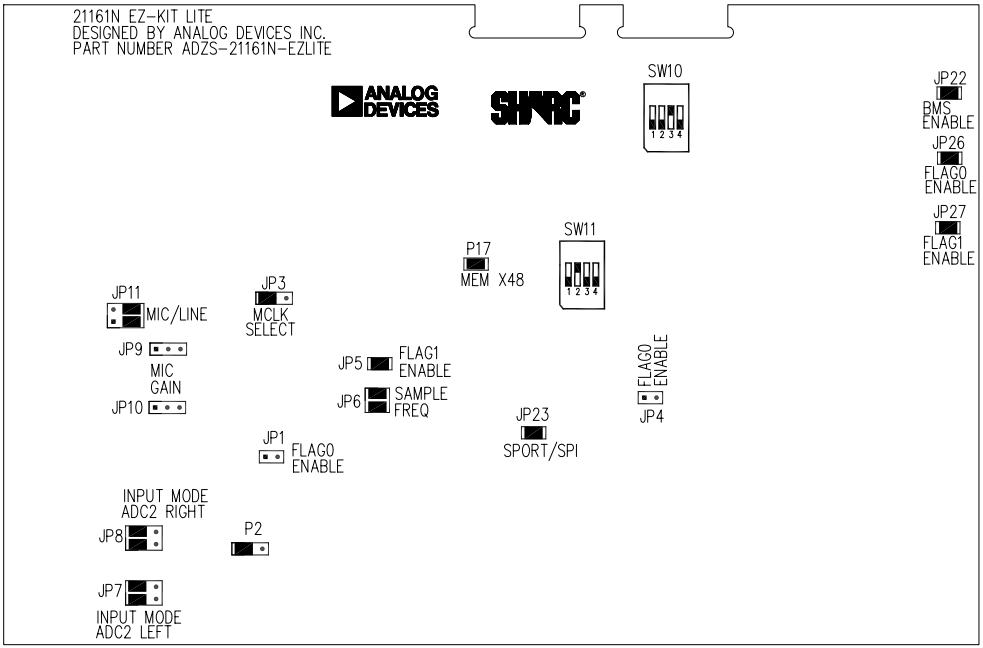

Figure 2-2. Switch and Jumper Locations

Table 2-2. Clock Mode Select Switch (SW10)

CLKDBL Pins 1 & 2	CLK_CFG1 Pins 3 & 4	CLK_CFG0 Pins 5 & 6	Core Clock Ratio	External Port Clock Ratio
Not installed	Installed	Installed	2:1	1x
Not installed	Installed	Not installed	3:1	1x
Not installed	**Not installed**	**Installed**	**4:1**	**1x (default)**
Installed	Installed	Installed	4:1	2x
Installed	Installed	Not installed	6:1	2x
Installed	Not installed	Installed	8:1	2x

Boot Mode Selection Switch (SW11)

The SW11 switch determines how the ADSP-21161N processor boots. Table 2-3 shows the switch settings. For more information on boot modes, see "~BMS Enable Jumper (JP22)" on page 2-7.

Table 2-3. Boot Mode Select Switch (SW11)

EBOOT Position 1	LBOOT Position 2	BMS Position 3	Processor Boot Mode
OFF	**ON**	**OFF (output)**	**EPROM boot (default)**
ON	ON	OFF (input)	Host processor boot
ON	OFF	ON (input)	Serial boot via SPI
ON	OFF	OFF (input)	Link port boot
ON	ON	ON (input)	No boot
OFF	OFF	ON (input)	Reserved

~BMS Enable Jumper (JP22)

The JP22 jumper controls the routing of the boot memory select (~BMS) signal. When the jumper is installed, the ~BMS signal is routed to the flash memory interface and can be used for reading, writing, and booting.

Install the jumper must be installed when booting in EPROM mode. The jumper must be removed when using serial boot or no-boot mode. If the jumper remains ON in serial boot or no-boot modes, the ~BMS signal is grounded, and the flash memory is selected. For more information on boot modes, see "Boot Mode Selection Switch (SW11)" on page 2-7.

SDRAM Disable Jumper (P17)

The P17 jumper is used to enable or disable the third SDRAM device. When the jumper is installed, the ADSP-21161N processor can access the SDRAM as 48-bit-wide external memory.

The upper 16 bits of data are multiplexed with the link ports and the external data bus; therefore, when the jumper is installed, the link ports are not available. To use the link ports, remove P17.

S/PDIF Selection Jumper (P2)

The P2 jumper is used to select Sony/Philips Digital Interface Format (S/PDIF) input to the CS8416 digital audio receiver. When the jumper is configured for an optical connection, the TOSLINK optical input connector (P4) must be used. When the jumper is configured for a coax connection, the RCA input connector (J6) must be used.

Table 2-4. S/PDIF Modes (P2)

Jumper Location	Mode
1 and 2	**Optical (default)**
2 and 3	Coax

MCLK Selection Jumper (JP3)

The JP3 jumper selects the source of the master clock (MCLK) for the AD1836 and AD1852 audio devices.

Table 2-5. MCLK Selection (JP3)

Jumper Location	MCLK Source
1 and 2	**Audio oscillator (12.288 MHz) (default)**
2 and 3	Derived clock from S/PDIF stream

FLAG0 Enable Jumper (JP1 and JP4)

In standard configuration, FLAG0 connects only to the SW1 user input switch. FLAG0 can be connected to the AD1836 audio codec by inserting JP4. FLAG0 can be connected to the CS8416 S/PDIF receiver by inserting JP1. See "AD1836 Control Selection Jumper (JP23)" on page 2-11 for more information.

FLAG1 Enable Jumper (JP5)

In standard configuration, FLAG1 connects to the AD1852 device and acts as a select for the SPI port. The JP5 jumper must be removed to use the push button switch or the signal on the expansion connector (P10). Once the jumper is removed, the SPI can no longer communicate with the AD1852 device.

Sample Frequency Jumper (JP6)

The JP6 jumper selects the sample frequency for the AD1852 device. Table 2-6 shows the valid frequency modes.

Table 2-6. Sample Frequencies

Jumper Location	Sample Frequency
None installed	Not allowed
3 and 4	192 kHz (2x interpolator)
1 and 2	96 kHz (4x interpolator)
1 and 2, 3 and 4	**48 kHz (8x interpolator) (default)**

ADC2 Input Mode Selection Jumpers (JP7 and JP8)

The JP7 and JP8 jumpers control the input mode to ADC2 of the AD1836 device (see Table 2-7). In high-performance mode, the signal is routed straight to the ADC. In PGA mode, the signal goes through a multiplexer and a programmable gain amplifier inside of the codec.

Table 2-7. ADC2 Input Mode

Jumper Location	Input Mode
3 and 5, 4 and 6	PGA
1 and 3, 2 and 4	**High performance (default)**

MIC Gain Selection Jumpers (JP9 and JP10)

The JP9 and JP10 jumpers select the pre-amp gain for the microphone circuit (see Table 2-8). The gain for the left and right channel must be configured identically.

Table 2-8. MIC Pre Amp Gain

Jumper Position	Gain
Not installed	**0 dB (default)**
1 and 2	20 dB
2 and 3	40 dB

ADC2 Input Selection Jumper (JP11)

The JP11 jumper selects the input source for ADC2. If the input source for ADC2 is LINE-IN, then the RCA connector J2 must be used. If the input source for ADC2 is a microphone, then the mini stereo plug J3 must be used. If a microphone is used, the gain of the circuit can be increased as described in "MIC Gain Selection Jumpers (JP9 and JP10)" on page 2-10.

When the JP11 jumpers are between pins 1 and 3 and between pins 2 and 4, the connection is to J3. When the jumpers are between pins 3 and 5 and between pins 4 and 6, the connection is to J2. The jumper settings are illustrated in Table 2-9). (The words MIC and LINE are on the board as a reference.)

Table 2-9. Audio Input Jumper Settings

Microphone Input	Stereo LINE_IN (Default)
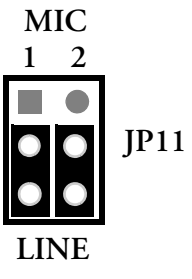	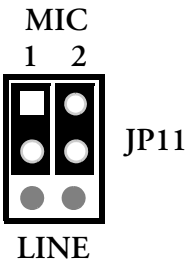

AD1836 Control Selection Jumper (JP23)

The AD1836 control registers are programmed through an SPI port. The SPI port can be configured to connect to the processor's SPI port or SPORT1. When the jumper is installed at JP23, the SPI port of the AD1836 device connects to SPORT1 of the processor. When the jumper is removed, the SPI port of AD1836 device connects to the SPI port of the processor. The jumper is installed by default.

SW1 Enable Jumper (JP26)

The SW1 push button is attached though a driver to FLAG0 of the processor. To disconnect the driver from FLAG0 (for example, to use FLAG0 as an output), remove JP26.

SW2 Enable Jumper (JP27)

The SW2 push button is attached though a driver to FLAG1 of the processor. To disconnect the driver from FLAG1 (for example, to use FLAG1 as an output), remove JP27.

Processor ID Settings

Resistors R155–157 and R144–146 set a different ID for the processor. During typical operation of the EZ-KIT Lite, there is only a single processor in the system; the resistors must be set to the single processor setting. When a second processor is attached to the board through the link port, the resistors must be changed to configure one board for processor 1 and the other board for processor 2. System configuration options are shown in Table 2-10.

Table 2-10. Processor ID Modes

Resistors Installed	Resistors Uninstalled	Description
R144, R145, R146	**R155, R156, R157**	**Single processor (default)**
R144, R145, R157	R146, R155, R156	Processor 1
R144, R146, R156	R145, R155, R157	Processor 2
Other		Invalid

LEDs and Push Buttons

This section describes the functionality of the LEDs and push buttons. Figure 2-3 shows the locations of the LEDs and push buttons.

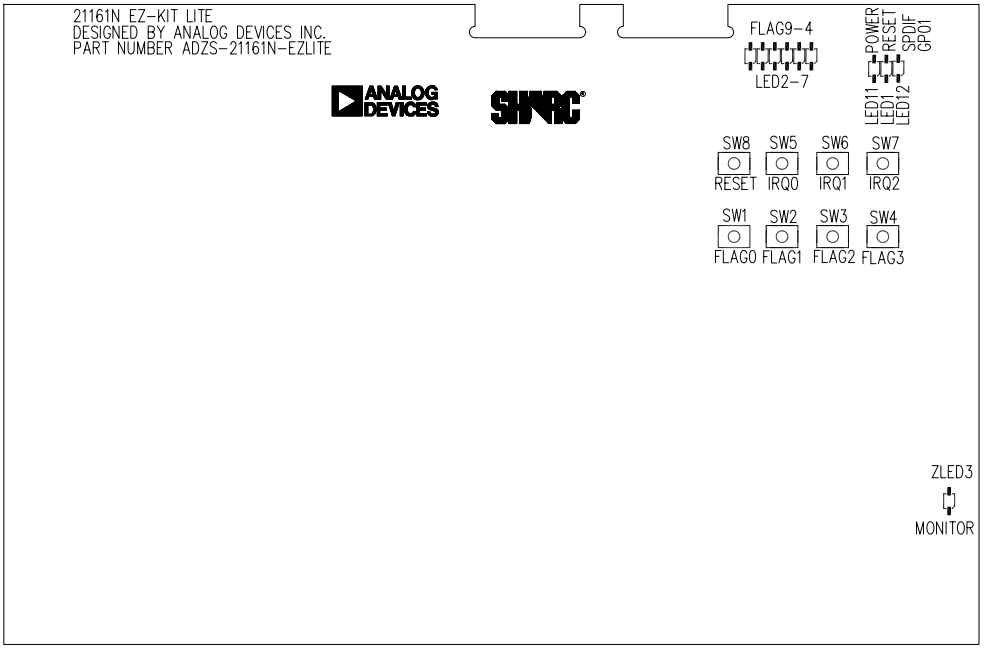

Figure 2-3. LED and Push Button Locations

Reset LED (LED1)

When LED1 is lit, the master reset of all the major ICs is active.

FLAG LEDs (LED2–7)

The flag LEDs connect to the processor's flag pins FLAG4-9. The LEDs are active high and are lit by an output of "1" from the processor. Refer to "LEDs and Push Buttons" on page 2-13 for more information on how to use the programmable flags to program the processor. Table 2-11 shows the flag signals and corresponding LEDs.

Table 2-11. FLAG LEDs

Flag Pin	LED Reference Designator
FLAG4	LED7
FLAG5	LED6
FLAG6	LED5
FLAG7	LED4
FLAG8	LED3
FLAG9	LED2

VERF LED (LED12)

The VERF LED indicates that there is a possible error in the audio stream of the CS8416 digital receiver. The error can occur when digital audio cables disconnect from the optical or coaxial SPDIF connectors.

Power LED (LED11)

When LED11 is lit (green), it indicates that power is being properly supplied to the board.

USB Monitor LED (ZLED3)

The USB monitor LED (ZLED3) indicates that USB communication has been initialized successfully, and you can connect to the processor using a VisualDSP++ EZ-KIT Lite session. Once the USB cable is plugged into the board, it takes approximately 15 seconds for the USB monitor LED to light. If the LED does not light, try cycling power on the board and/or reinstalling the USB driver (see the *VisualDSP++ Installation Quick Reference Card*).

When VisualDSP++ is actively communicating with the EZ-KIT Lite target board, the LED can flicker, indicating communications handshake.

Programmable Flag Push Buttons (SW1–4)

Four push buttons (SW1–4) are provided for general-purpose user input. The push buttons connect to the processor's FLAG pins. The push buttons are active high and, when pressed, send a high (1) to the processor. Refer to "Flag Pins" on page 1-9 for more information. The push button reference designators and corresponding flags are summarized in Table 2-12.

Table 2-12. Flag Switches

Flag Pin	Push Button Reference Designator	FLag Pin	Push Button Reference Designator
FLAG0	SW1	FLAG2	SW3
FLAG1	SW2	FLAG3	SW4

Interrupt Push Buttons (SW5–7)

Three push buttons (SW5–7) are provided for general-purpose user interrupts. The push buttons connect to the processor's programmable flag pins. The push buttons are active high and, when pressed, send a high (1)

to the processor. Refer to "Flag Pins" on page 1-9 for more information. The push button reference designators and corresponding interrupt signals are summarized in Table 2-13.

Table 2-13. Interrupt Switches

Interrupt Signal	Push Button Reference Designator
IRQ0	SW5
IRQ1	SW6
IRQ2	SW7

Board Reset Push Button (SW12)

The RESET push button (SW12) resets all of the ICs on the board. The only exception is the USB interface chips. These chips are not being reset when the push button is pressed after the USB cable has been plugged in and communication correctly initialized with the PC. After USB communication has been initialized, the only way to reset the USB is by powering down the board.

Pressing the RESET push button (SW12) while VisualDSP++ is running disrupts communication and causes errors in the current debug session. VisualDSP++ must be closed and re-opened.

Connectors

This section describes the connector functionality and provides information about mating connectors. Figure 2-4 shows the connector locations.

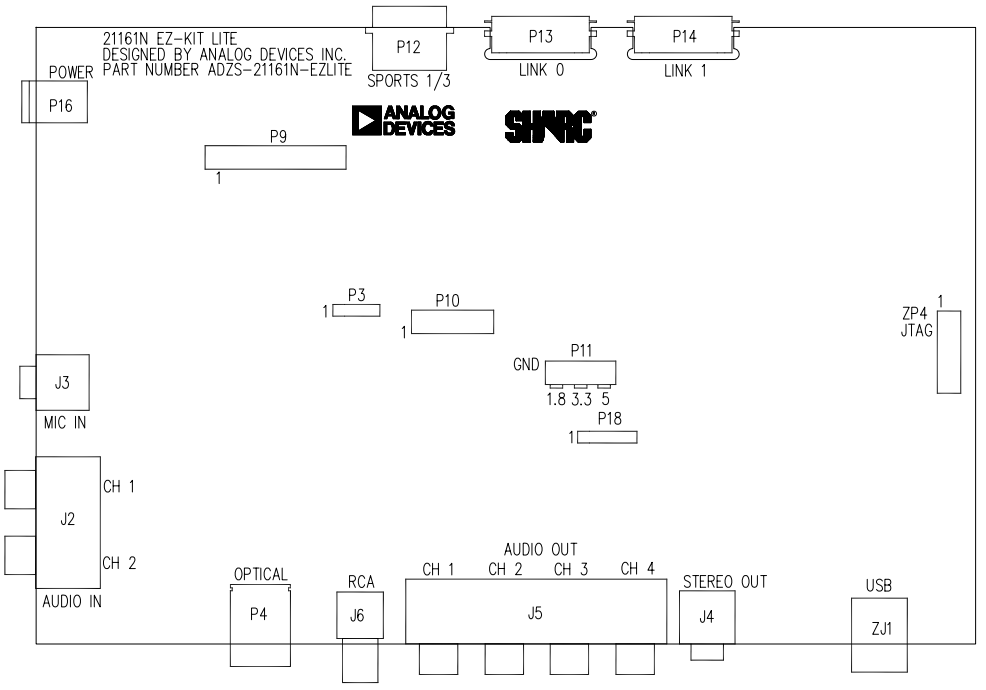

Figure 2-4. Connector Locations

USB Connector (ZJ1)

The USB connector (ZJ1) is a standard Type B USB receptacle.

Part Description	Manufacturer	Part Number
Type B USB receptacle	MILL-MAX	897-43-004-90-000000
	DIGI-KEY	ED900064-ND
Mating Connector (provided with the EZ-KIT Lite)		
USB cable	ASSMANN	AK672-5
	DIGI-KEY	AK672-5ND

Audio Connectors (J2–6, P4)

There are two 3.5 mm stereo audio jacks, 13 RCA jacks, and one optical connector.

Part Description	Manufacturer	Part Number
3.5 mm stereo jack (J3 and J4)	A/D ELECTRONICS	ST-323-5
RCA jacks (J2)	SWITCHCRAFT	PJRAS2X2S01X
RCA jacks (J5)	SWITCHCRAFT	PJRAS4X2U01X
Coaxial (J6)	SWITCHCRAFT	PJRAN1X1U01X
TORX (P4)	TOSHIBA	TORX173F
Mating Connectors		
3.5 mm stereo plug to 3.5mm stereo cable (J3 and J4)	RADIO SHACK	L12-2397A
2- channel RCA interconnect cable (J2 and J5)	MONSTER CABLE	BI100-1M
Digital coaxial cable (J6)	MONSTER CABLE	IDL100-1M
Digital fiber-optic cable (P4)	MONSTER CABLE	ILS100-1M

External Port Connector (P9)

A 40-pin 0.05’ spacing connector provides access to some of the processor’s external port signals. By default, P9 is not populated.

Part Description	Manufacturer	Part Number
40-pin 0.05' (male)	FCI	68737-440HLF
Mating Connector		
Female-to-female cable	SAMTEC	FFSD-20-D-5.000-01-N

Host Processor Interface Connector (P10)

A 20-pin 0.05' spacing connector provides access to some of the processor's external port signals. By default, P10 is not populated.

Part Description	Manufacturer	Part Number
20-pin 0.05' (male)	FCI	68737-420HLF
Mating Connector		
Female-to-female cable	SAMTEC	FFSD-10-D-5.000-01-N

Voltage Connector (P11)

The voltage connector (P11) allows you to measure the 1.8V, 3.3V, and 5.0V rails. There are two pins associated with each voltage and the even numbered pins are ground. By default, P11 is not populated.

SPORT1 and SPORT3 Connector (P12)

SPORT1 and SPORT3 connect to a 20-pin connector P12.

Part Description	Manufacturer	Part Number
20-position AMPMODU system 50 receptacle	TYCO	5-104069-1
Mating Connectors		
20-position AMPMODU system 20 connector	AMP	2-487937-0

Part Description	Manufacturer	Part Number
20-position AMPMODU system 20 connector (w/o lock)	AMP	2-487938-0
Flexible film contacts (20 per connector)	AMP	487547-1

Link Port Connectors (P13 and P14)

Each link port connects to a 26-pin connector. Refer to *EE-106* found on the ADI Web site at http://www.analog.com for more information about the link port connectors.

Part Description	Manufacturer	Part Number
26-position connector	HONDA	RMCA-EA26LMY-0M03-A+
Mating Connectors		
Cable connector	HONDA	RMCA-E26F1S-A
Shroud	HONDA	RMCA-E26L1A
Coaxial cable	GORE	DXN2132

Power Input Connector (P16)

The power input connector (P16) provides all of the power necessary to operate the EZ-KIT Lite board.

Part Description	Manufacturer	Part Number
2.5 mm power jack (P16)	SWITCHCRAFT	RAPC712X
	DIGI-KEY	RAPC712X-ND
Mating Power Supply (shipped with EZ-KIT Lite)		
7V power supply	CUI STACK	DTS070175SUDC-P6-SZ

SPI Connector (P18)

The 5-pin header is the connecting point for an external SPI device. By default, P18 is not populated.

Part Description	Manufacturer	Part Number
IDC 5X1 IDC5X1	SAMTEC	TSW-105-26-T-S

JTAG Connector (ZP4)

The JTAG header (ZP4) is the connecting point for a JTAG in-circuit emulator pod. When an emulator connects to the JTAG header, the USB debug interface is disabled.

Pin 3 is missing to provide keying. Pin 3 in the mating connector should have a plug.

When using an emulator with the EZ-KIT Lite board, follow the connection instructions provided with the emulator.

Part Description	Manufacturer	Part Number
14-pin IDC header (ZP4)	FCI	68737-414HLF

Specifications

This section provides the requirements for powering the board.

Power Supply

The power connector supplies DC power to the EZ-KIT Lite board. Table 2-14 shows the power supply specifications.

Table 2-14. Power Supply Specifications

Terminal	Connection
Center pin	+7V@2 amps
Outer ring	GND

Board Current Measurements

The ADSP-21161N EZ-KIT Lite board provides two zero-ohm resistors that can be removed to measure current draw. Table 2-15 shows the resistor number, the voltage plane, and a short description of the plane components.

Table 2-15. Current Measurement Resistors

Resistor	Voltage Plane	Description
R168	VDDINT	Core voltage of the processor
R169	VDDEXT	IO (external) voltage of the processor

A ADSP-21161N EZ-KIT LITE BILL OF MATERIALS

The bill of materials corresponds to "ADSP-21161N EZ-KIT Lite Schematic" on page B-1. Please check the latest schematic on the Analog Devices Web site:
http://www.analog.com/processors/sharc/technicalLibrary/manuals/index.html#Evaluation%20Kit%20Manuals.

Ref.	Qty.	Description	Reference Designator	Manufacturer	Part Number
1	3	74LVC14A SOIC14	U21-22,U35	TI	74LVC14AD
2	1	MMBT4124 SOT-23	Q2	FAIRCHILD	MMBT4124
3	1	74LVC00AD SOIC14	U32	PHILIPS	74LVC00AD
4	1	12.288MHZ OSC001	U25	DIGI-KEY	SGR-8002DC-PCC-ND 12.288M
5	1	25MHZ OSC001	U24	DIGI-KEY	SGR-8002DC-PCC-ND
6	1	CS8416-CS SOIC28	U7	CIRRUS LOGIC	CS8416-CSZ
7	10	LMV722M SOIC8	U12-20,U28	NATIONAL SEMI	LMV722MNOPB
8	3	MT48LC8M16A 2P-6A TSOP54	U2-4	MICRON	MT48LC8M16A2P-6A
9	1	74FCT244AT QSOP20	U23	IDT	IDT74FCT244CTQG

Ref.	Qty.	Description	Reference Designator	Manufacturer	Part Number
10	1	FDC658P SOT23-6	U6	FAIRCHILD	FDC658P
11	1	21161 M29W040“U5”	U5	ST MICRO	M29W040B120K6E
12	1	ADM708SARZ SOIC8	U26	ANALOG DEVICES	ADM708SARZ
13	1	AD1852JRSZ SSOP28	U11	ANALOG DEVICES	AD1852JRSZ
14	1	ADP3339AKCZ-5 SOT-223	VR1	ANALOG DEVICES	ADP3339AKCZ-5-R7
15	1	ADP3338AKCZ-18 SOT-223	VR3	ANALOG DEVICES	ADP3338AKCZ-1.8-R7
16	1	AD8532ARZ SOIC8	U29	ANALOG DEVICES	AD8532ARZ
17	1	ADSP-21161NKCAZ PBGA225	U1	ANALOG DEVICES	ADSP-21161NKCAZ100
18	1	AD1836AASZ MQFP52	U10	ANALOG DEVICES	AD1836AASZ
19	1	ADG774ABRQZ QSOP16	U31	ANALOG DEVICES	ADG774ABRQZ
20	1	ADP1864 SOT23-6	VR6	ANALOG DEVICES	ADP1864AUJZ-R7
21	5	RUBBERFOOT	M1-5	MOUSER	517-SJ-5018BK
22	1	PWR 2.5MM_JACK CON005	P16	SWITCH-CRAFT	RAPC712X
23	1	TORX173 6PIN CON008	P4	TOSHIBA	TORX173(F)
24	1	RCA 4X2 CON011	J5	SWITCH-CRAFT	PJRAS4X2U01X

Ref.	Qty.	Description	Reference Designator	Manufacturer	Part Number
25	1	RCA 1X1 CON012	J6	SWITCH-CRAFT	PJRAN1X1U01X
26	1	RCA 2X2 CON013	J2	SWITCH-CRAFT	PJRAS2X2S01X
27	2	LNKPRT 12X2 CON010	P13-14	HONDA(TSUSHINK)	RMCA-EA26LMY-0M03-A+
28	1	.05 10X2 CON014	P12	TYCO	5-104069-1
29	8	MOMENTARY SWT013	SW1-8	PANASONIC	EVQ-PAD04M
30	1	DIP8SWT016	SW9	C&K	TDA08H0SB1
31	2	DIP4SWT018	SW10-11	ITT	TDA04HOSB1
32	8	IDC 2X1 IDC2X1	JP1,JP4-5,JP22-23,JP26-27,P17	FCI	90726-402HLF
33	4	IDC 3X1 IDC3X1	JP3,JP9-10,P2	FCI	90726-403HLF
34	1	IDC 7X2 IDC7X2	ZP4	FCI	68737-414HLF
35	1	2.5A RESETABLE FUS001	F1	RAYCHEM	SMD250F-2
36	19	IDC 2PIN_JUMPER_SHORT	SJ1-18,SJ32	DIGI-KEY	S9001-ND
37	1	IDC 2X2 IDC2X2	JP6	FCI	68737-404HLF
38	2	3.5MM STEREO_JACK CON001	J3-4	A/D ELECTRONICS	ST-323-5
39	3	IDC 3X2 IDC3X2	JP7-8,JP11	SULLINS	GEC03DAAN

Ref.	Qty.	Description	Reference Designator	Manufacturer	Part Number
40	1	IDC 4X1 IDC4X1	P3	BERG-FCI	54101-T08-04LF
41	1	10 1/8W 5% 1206	R2	KOA	P10ECTRk7372BTTDD100
42	6	01/4W5%1206	R153-154,R168-169,R217-218	KOA	0.0ECTRk7372BTTED
43	7	YELLOW LED001	LED2-7,LED12	PANASONIC	LN1461C
44	8	330PF 50V 5% 0805	C36,C42,C48, C54,C60,C66, C72,C78	AVX	08055A331JAT
45	64	0.01UF 100V 10% 0805	C2,C4,C89, C91-136,C138, C149,C165-171, C174,C184, C193,C200-201, C204	AVX	08051C103KAT2A
46	11	0.22UF 25V 10% 0805	C156-164,C172, C183	AVX	08053C224FAT
47	17	0.1UF 50V 10% 0805	C1,C7,C9-11, C33,C87-88, C90,C137,C139, C150-151,C173, C182,C191-192	AVX	08055C104KAT
48	10	1000PF 50V 5% 0805	C3,C14-15,C19-20,C24-25,C29-30,C181	AVX	08055A102JAT2A
49	4	10UF 16V 10% C	CT19-20,CT22, CT36	AVX	TAJC106K016R

Ref.	Qty.	Description	Reference Designator	Manufacturer	Part Number
50	32	10K 1/10W 5% 0805	R3,R5,R7,R13, R18-20,R124, R126,R128, R130,R132, R134,R136, R144-146,R148-149,R151,R158-164,R172,R175, R190,R219-220	VISHAY	CRCW080510K0JNEA
51	4	33 1/10W 5% 0805	R1,R8,R150, R152	VISHAY	CRCW080533R0JNEA
52	8	680 1/10W 5% 0805	R137-143,R147	VISHAY	CRCW0805680RJNEA
53	2	2.0K 1/8W 1% 1206	R49-50	VISHAY	CRCW12062K00FKEA
54	10	49.9K 1/8W 1% 1206	R66,R74,R82, R90,R98,R106, R114,R122, R192,R206	VISHAY	CRCW120649K9FKEA
55	24	100PF 100V 5% 1206	C12,C16-17, C21-22,C26-27, C31,C35,C38, C41,C44,C47, C50,C53,C56, C59,C62,C65, C68,C71,C74, C77,C80	AVX	12061A101JAT2A
56	5	10UF 16V 10% B	CT1-4,CT11	AVX	TAJB106K016R
57	7	100 1/10W 5% 0805	R123,R125, R127,R129, R131,R133, R135	VISHAY	CRCW0805100RJNEA

Ref.	Qty.	Description	Reference Designator	Manufacturer	Part Number
58	8	220PF 50V 10% 1206	C39,C45,C51, C57,C63,C69, C75,C81	AVX	12061A221JAT2A
59	2	2A S2A DO-214AA	D1-2	MICROCOMM	S2A-TP
60	12	600 100MHZ 500MA 1206	FER1-11,FER14	STEWARD	HZ1206B601R-10
61	8	237.0 1/8W 1% 1206	R23,R27,R30, R34,R40-41, R47-48	VISHAY	CRCW1206237RFKEA
62	4	750.0K 1/8W 1% 1206	R25,R32,R38, R45	VISHAY	CRCW1206750KFKEA
63	16	5.76K 1/8W 1% 1206	R21-22,R24, R26,R28-29, R31,R33, R35-37,R39, R42-44,R46	VISHAY	CRCW12065K76FKEA
64	1	3.01K 1/8W 1% 1206	R9	KOA	RK73H2BTTD3011F
65	8	11.0K 1/8W 1% 1206	R59,R67,R75, R83,R91,R99, R107,R115	VISHAY	CRCW120611K0FKEA
66	8	120PF 50V 5% 1206	C13,C18,C23, C28,C187-190	AVX	12065A121JAT2A
67	1	75 1/8W 5% 1206	R10	VISHAY	CRCW120675R0JNEA
68	2	820PF 100V 10% 1206	C32,C34	AVX	12061A821KAT2A
69	1	47.0K 1/10W 1% 0805	R6	VISHAY	CRCW080547K0FKEA
70	8	680PF 50V 1% 0805	C37,C43,C49, C55,C61,C67, C73,C79	AVX	08055A681FAT2A

Ref.	Qty.	Description	Reference Designator	Manufacturer	Part Number
71	1	10UF 25V +80-20% 1210	C8	PANASONIC	ECJ4YF1E106Z
72	8	2.74K 1/8W 1% 1206	R63,R71,R79, R87,R95,R103, R111,R119	VISHAY	CRCW12062K74FKEA
73	16	5.49K 1/8W 1% 1206	R60-61,R68-69, R76-77,R84-85, R92-93, R100-101,R108-109,R116-117	VISHAY	CRCW12065K49FKEA
74	8	3.32K 1/8W 1% 1206	R62,R70,R78, R86,R94,R102, R110,R118	VISHAY	CRCW12063K32FKEA
75	2	100.0 1/8W 1% 1206	R54,R57	PANASONIC	ERJ-8ENF1000V
76	8	1.65K 1/8W 1% 1206	R64,R72,R80, R88,R96,R104, R112,R120	VISHAY	CRCW12061K65FKEA
77	6	10UF 16V 20% CAP002	CT5-10	PANASONIC	EEE1CA100SR
78	10	68UF 25V 20% CAP003	CT26-35	PANASONIC	EEE-FC1E680P
79	1	2A SL22 DO-214AA	D3	DIGI-KEY	SL22-E3/1GI-ND
80	1	270 1/10W 5% 0805	R12	VISHAY	CRCW0805270RJNEA
81	4	0 1/10W 5% 0805	R4,R11,R15, R174	VISHAY	CRCW08050000Z0EA
82	1	190 100MHZ 5A FER002	FER13	MURATA	DLW5BSN191SQ2
83	2	1.0K 1/8W 1% 1206	R53,R56	KOA	RK73H2BTTDD1001F

Ref.	Qty.	Description	Reference Designator	Manufacturer	Part Number
84	1	0.022UF 50V 5% 0805	C5	AVX	08055C223JAT2A
85	1	68PF 50V 5% 0603	C196	AVX	06035A680JAT2A
86	1	470PF 50V 5% 0603	C195	AVX	06033A471JAT2A
87	2	0 1/10W 5% 0603	R14,R17	PHYCOMP	232270296001L
88	1	24.9K 1/10W 1% 0603	R16	DIGI-KEY	311-24.9KHTR-ND
89	1	47UF 6.3V 10% B	CT37	NIC COMPONENTS	NTC-T476K6.3TRBF
90	1	0.05 1/2W 1% 1206	R165	SUSUMA	RL16326-R050-F-N
91	1	10UF 16V 10% 1210	C197	AVX	1210YD106KAT2A
92	4	10.0K 1/8W 1% 1206	R51-52,R55,R58	DALE	CRCW120610K0FKEA
93	1	GREENLED001	LED11	PANASONIC	LN1361CTR
94	1	REDLED001	LED1	PANASONIC	LN1261CTR
95	2	1000PF 50V 5% 1206	C85-86	AVX	12065A102JAT2A
96	8	2200PF 50V 5% 1206	C40,C46,C52, C58,C64,C70, C76,C82	AVX	12065A222JAT050
97	1	100K 1/8W 5% 1206	R167	VISHAY	CRCW1206100KFKEA
98	8	604.0 1/8W 1% 1206	R65,R73,R81, R89,R97,R105, R113,R121	PANASONIC	ERJ-8ENF6040V
99	7	1UF20V20%A	CT12-18	AVX	TAJA105K020R

Ref.	Qty.	Description	Reference Designator	Manufacturer	Part Number
100	3	4.7UF 25V 10% C	CT23-25	AVX	TAJC475K025R
101	2	20.0K 1/8W 1% 1206	R170,R173	VISHAY	CRCW120620K0FKEA
102	1	255.0K 1/10W 1% 0603	R171	VISHAY	CRCW06032553FK
103	1	80.6K 1/10W 1% 0603	R166	DIGI-KEY	311-80.6KHRCT-ND
104	1	6.8UH 25% IND009	L1	DIGI-KEY	308-1328-1-ND
105	1	4A SSB43L DO-214AA	D5	VISHAY	SSB43L
106	2	10K 100MW 2% RNET16	RN1-2	CTS	767161103GP

ADSP-21161 EZ-KIT LITE Schematic

ANALOG DEVICES
20 Cotton Road
Nashua, NH 03063
PH: 1-800-ANALOGD

Title	ADSP-21161 EZ-KIT LITE TITLE		
Size C	**Board No.** A0157-2000		**Rev** 3.0
Date 11-8-2006_10:31		**Sheet** 1 **of** 16	

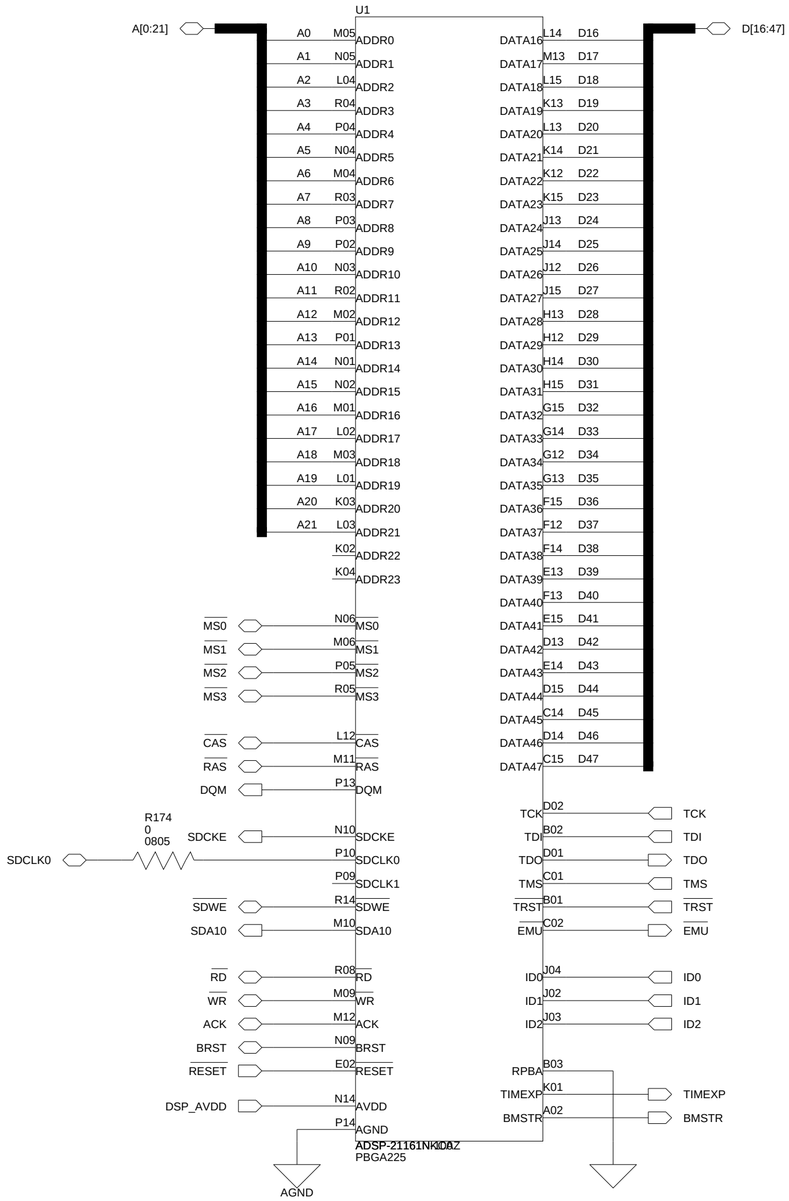

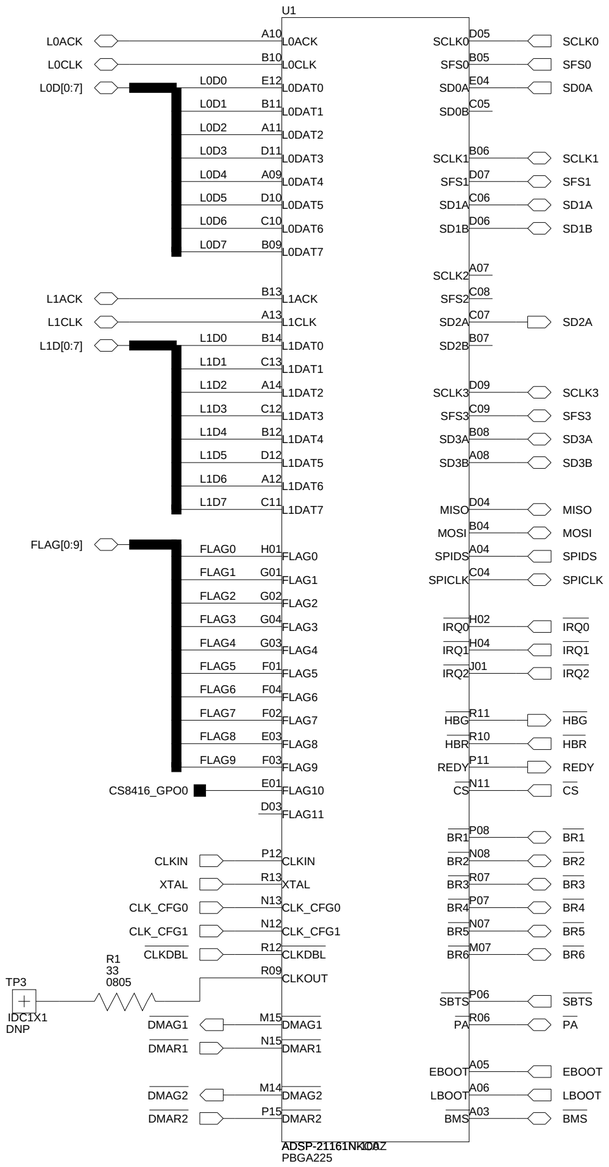

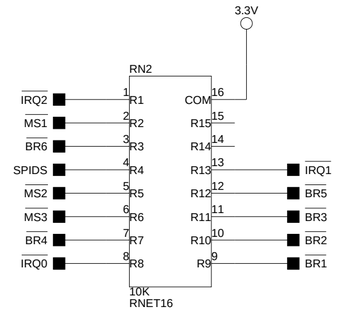

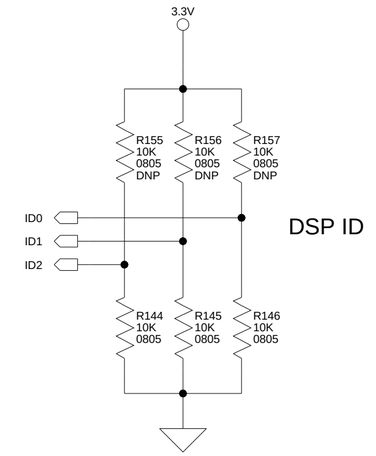

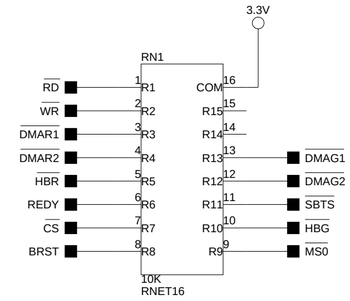

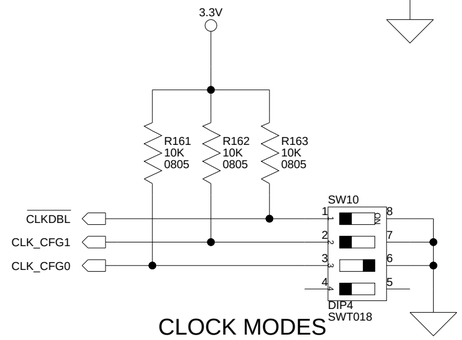

CLKDBL	CLK_CFG1	CLK_CFG0	Core Clock Ratio	EP Clock Ratio
OFF	ON	ON	2:1	1X
OFF	ON	OFF	3:1	1X
* OFF	OFF	ON	4:1	1X
ON	ON	ON	4:1	2X
ON	ON	OFF	6:1	2X
ON	OFF	ON	8:1	2X

* DEFAULT

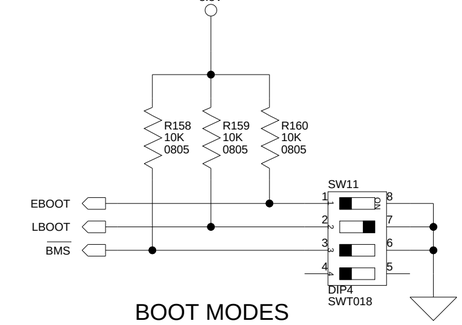

EBOOT	LBOOT	BMS	Booting Mode
* OFF	ON	OFF Output	EPROM
ON	ON	OFF (Input)	Host Processor
ON	OFF	ON (Input)	Serial Boot via SPI
ON	OFF	OFF (Input)	Link Port
ON	ON	ON (Input)	No Booting
OFF	OFF	ON (Input)	Reserved

* DEFAULT

REMOVE JP22 WHEN USING SPI OR NO BOOT MODES (REFER TO SHEET 4)

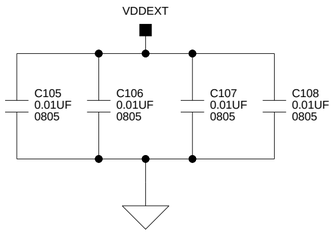

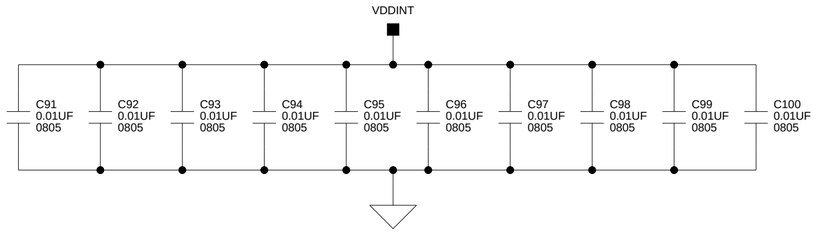

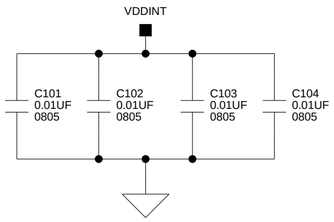

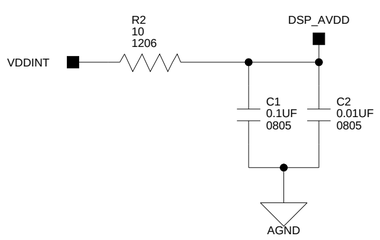

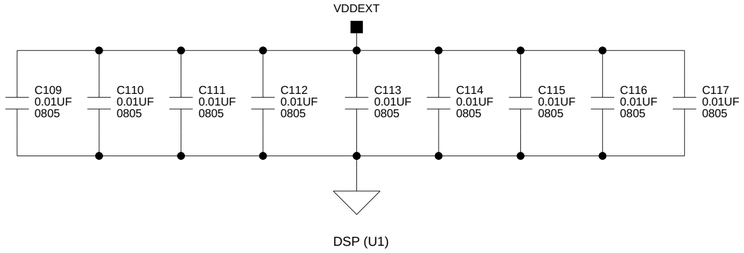

ANALOG DEVICES
20 Cotton Road
Nashua, NH 03063
PH: 1-800-ANALOGD

Title	ADSP-21161 EZ-KIT LITE DSP		
Size C	Board No. A0157-2000		Rev 3.0
Date 11-8-2006_10:31		Sheet 2 of 16	

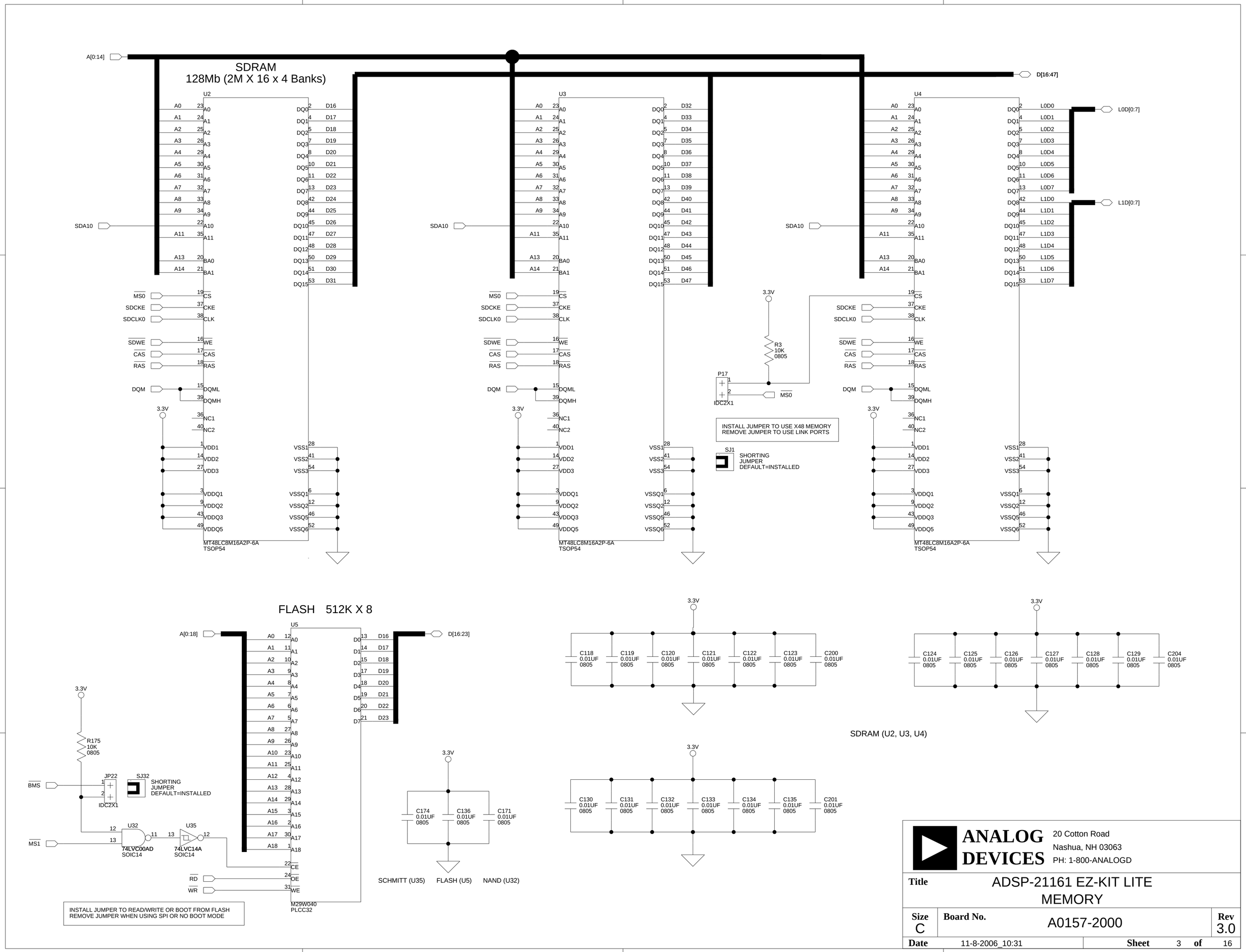
SDRAM
128Mb (2M X 16 x 4 Banks)
A[0:14]
D[16:47]
L0D[0:7]
L1D[0:7]
U2
U3
U4
SDA10
MS0
SDCKE
SDCLK0
SDWE
CAS
RAS
DQM
3.3V
MT48LC8M16A2P-6A
TSOP54
R3
10K
0805
P17
IDC2X1
INSTALL JUMPER TO USE X48 MEMORY
REMOVE JUMPER TO USE LINK PORTS
SJ1
SHORTING
JUMPER
DEFAULT=INSTALLED
FLASH 512K X 8
A[0:18]
D[16:23]
U5
M29W040
PLCC32
R175
10K
0805
BMS
JP22
IDC2X1
SJ32
SHORTING
JUMPER
DEFAULT=INSTALLED
MS1
U32
74LVC00AD
SOIC14
U35
74LVC14A
SOIC14
RD
WR
INSTALL JUMPER TO READ/WRITE OR BOOT FROM FLASH
REMOVE JUMPER WHEN USING SPI OR NO BOOT MODE
C174
0.01UF
0805
C136
0.01UF
0805
C171
0.01UF
0805
SCHMITT (U35)
FLASH (U5)
NAND (U32)
C118
C119
C120
C121
C122
C123
C200
C124
C125
C126
C127
C128
C129
C204
SDRAM (U2, U3, U4)
C130
C131
C132
C133
C134
C135
C201
ANALOG
DEVICES
20 Cotton Road
Nashua, NH 03063
PH: 1-800-ANALOGD
Title
ADSP-21161 EZ-KIT LITE
MEMORY
Size
C
Board No.
A0157-2000
Rev
3.0
Date
11-8-2006_10:31
Sheet
3
of
16

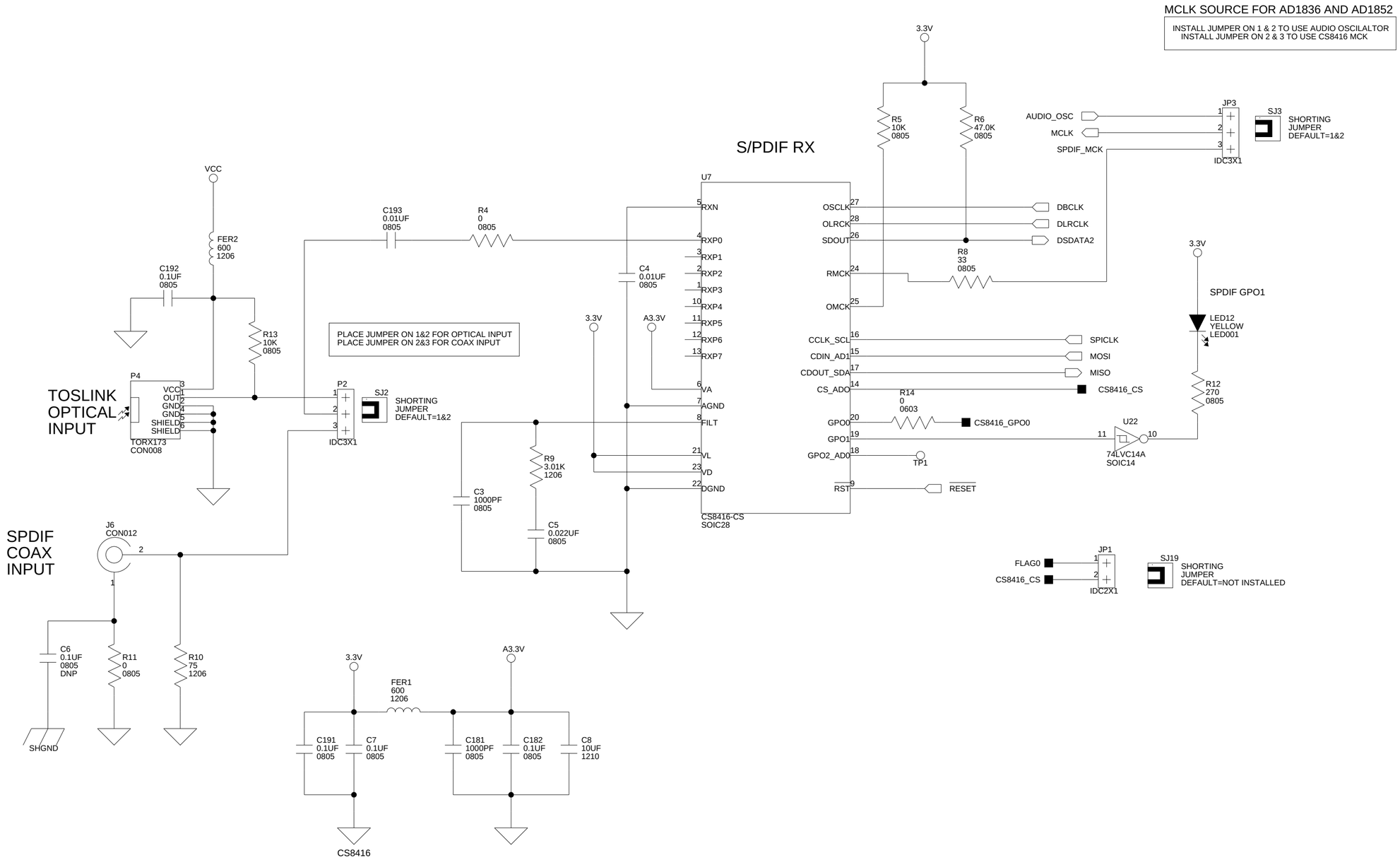

ANALOG DEVICES
20 Cotton Road
Nashua, NH 03063
PH: 1-800-ANALOGD

Title	ADSP-21161 EZ-KIT LITE SPDIF RECEIVER		
Size C	**Board No.** A0157-2000		**Rev** 3.0
Date 11-9-2006_13:34		**Sheet** 4 **of** 16	

INSTALL JUMPER JP4, REMOVE JP1, JP23 AND JP26 TO CONNECT CODEC TO SPI PORT
REMOVE JUMPER JP1, JP4 AND JP26 TO USE FLAG0 FOR PUSH BUTTON OR EXPANSION HEADER

ODVDD IS CONNECTED TO 3.3V

SAMPLE FREQUENCY	1&2	3&4
NOT ALLOWED	NOT SHORTED	NOT SHORTED
192kHz (2X INTERPOLATOR)	NOT SHORTED	SHORTED
96kHz (4X INTERPOLATOR)	SHORTED	NOT SHORTED
48kHz (8X INTERPOLATOR)	SHORTED	SHORTED

ADC1 LEFT
ADC1 RIGHT
ADC2 LEFT
ADC2 RIGHT
DAC1 LEFT
DAC1 RIGHT
DAC2 LEFT
DAC2 RIGHT
DAC3 LEFT
DAC3 RIGHT
DAC4 LEFT
DAC4 RIGHT

CODEC

AUX DAC

INSTALL JUMPER JP4, REMOVE JP1, JP23 AND JP26 TO CONNECT CODEC TO SPI PORT
REMOVE JUMPER JP1, JP4 AND JP26 TO USE FLAG0 FOR PUSH BUTTON OR EXPANSION HEADER

MUX (U31)

TURNING THE SWITCHES ON PUTS THE BOARD IN LOOPBACK MODE

CODEC (U10)

OPAMP (U28)

CODEC (U10)

AUX DAC (U11)

ANALOG DEVICES	20 Cotton Road Nashua, NH 03063 PH: 1-800-ANALOGD		
Title	ADSP-21161 EZ-KIT LITE AUDIO CODEC		
Size: C	Board No.: A0157-2000		Rev: 3.0
Date: 11-9-2006_13:34		Sheet: 5 of 16	

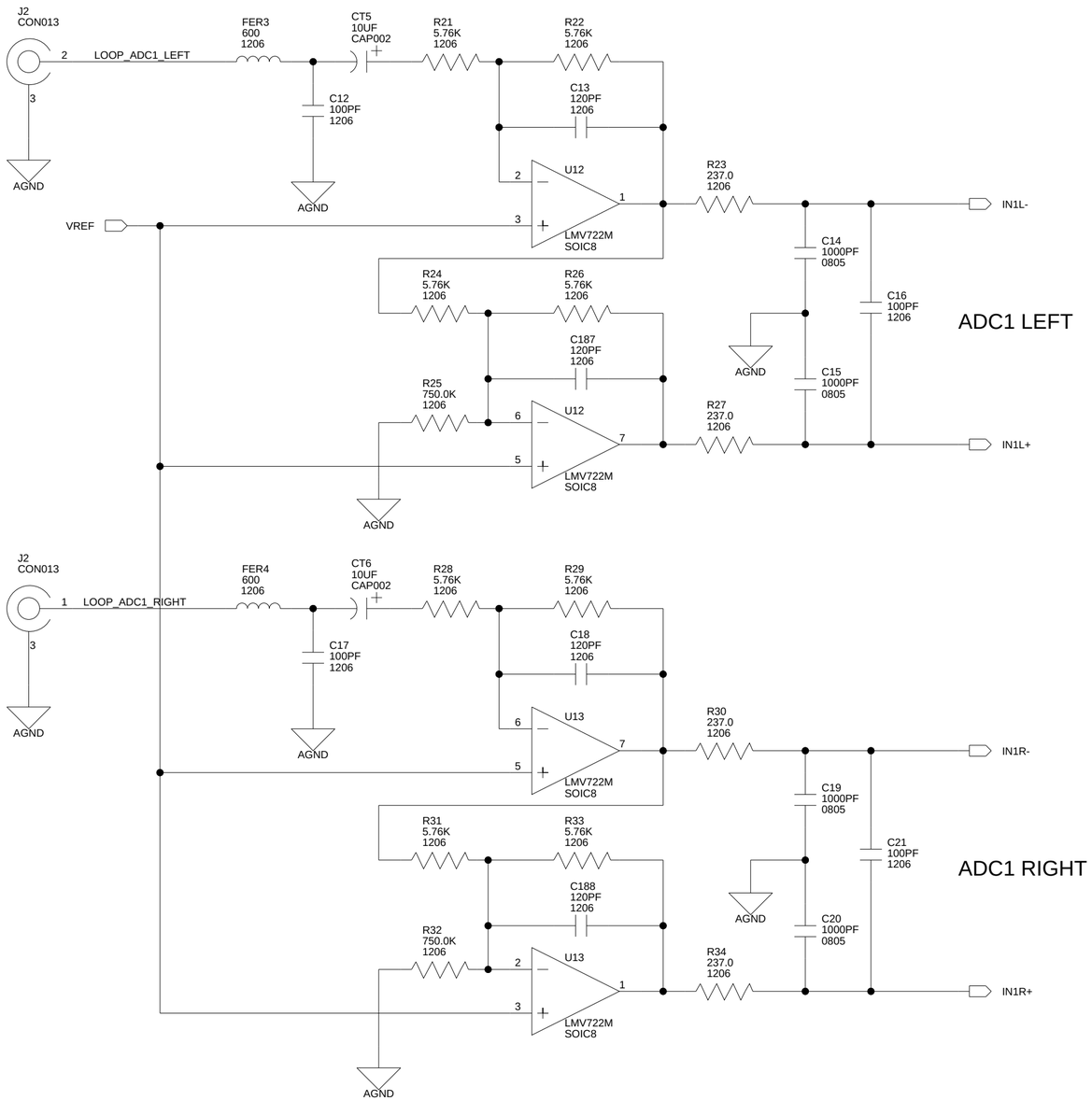

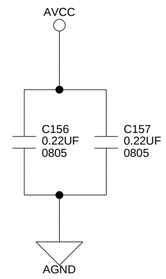

OPAMPS (U12, U13)

ANALOG DEVICES	20 Cotton Road Nashua, NH 03063 PH: 1-800-ANALOGD		
Title	ADSP-21161 EZ-KIT LITE AUDIO IN 1		
Size C	**Board No.** A0157-2000		**Rev** 3.0
Date 11-8-2006_10:31		**Sheet** 6 **of** 18	

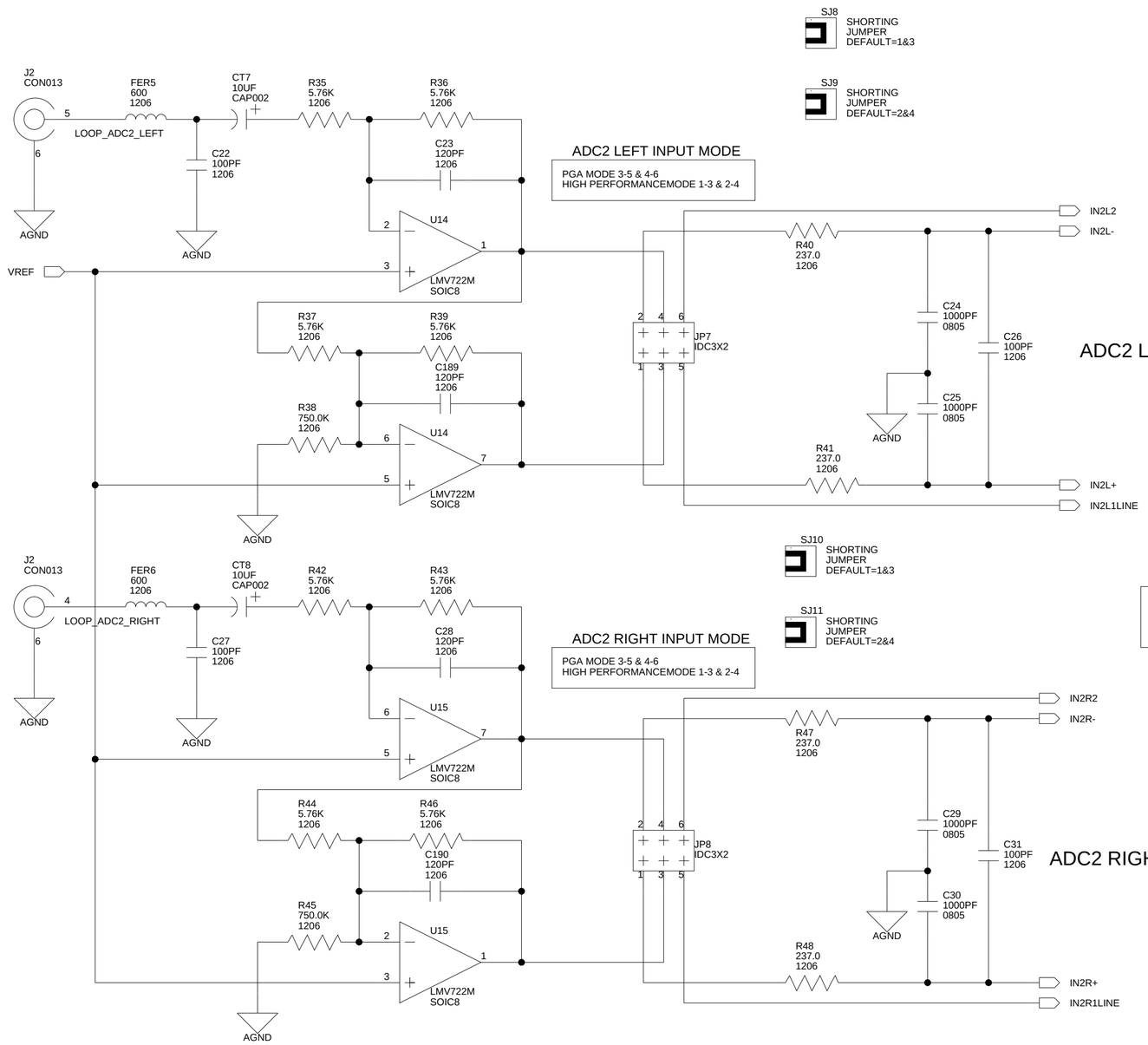

ANALOG DEVICES	20 Cotton Road Nashua, NH 03063 PH: 1-800-ANALOGD	
Title	ADSP-21161 EZ-KIT LITE AUDIO IN 2	
Size C	**Board No.** A0157-2000	**Rev** 3.0
Date 11-8-2006_10:30	**Sheet** 7 **of** 16	

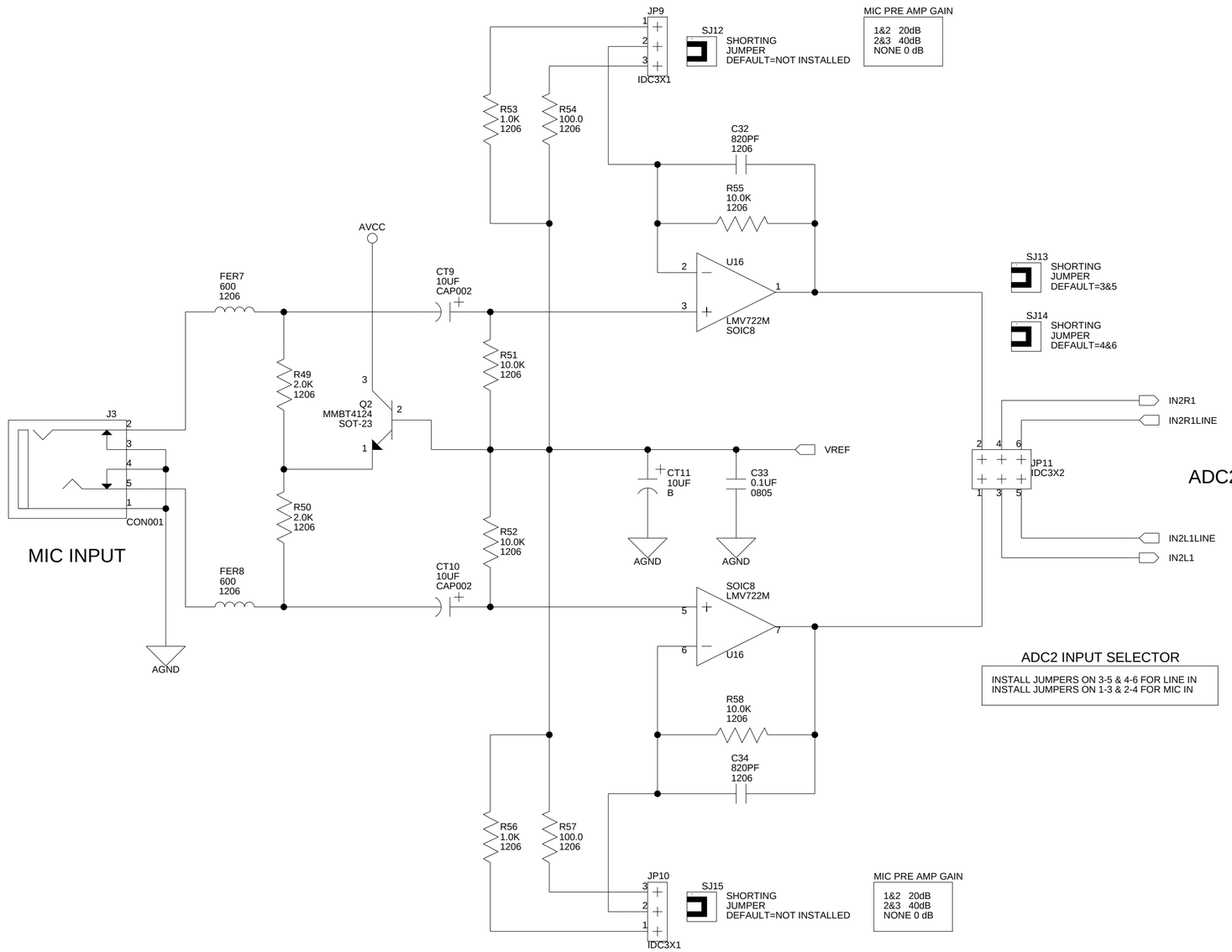

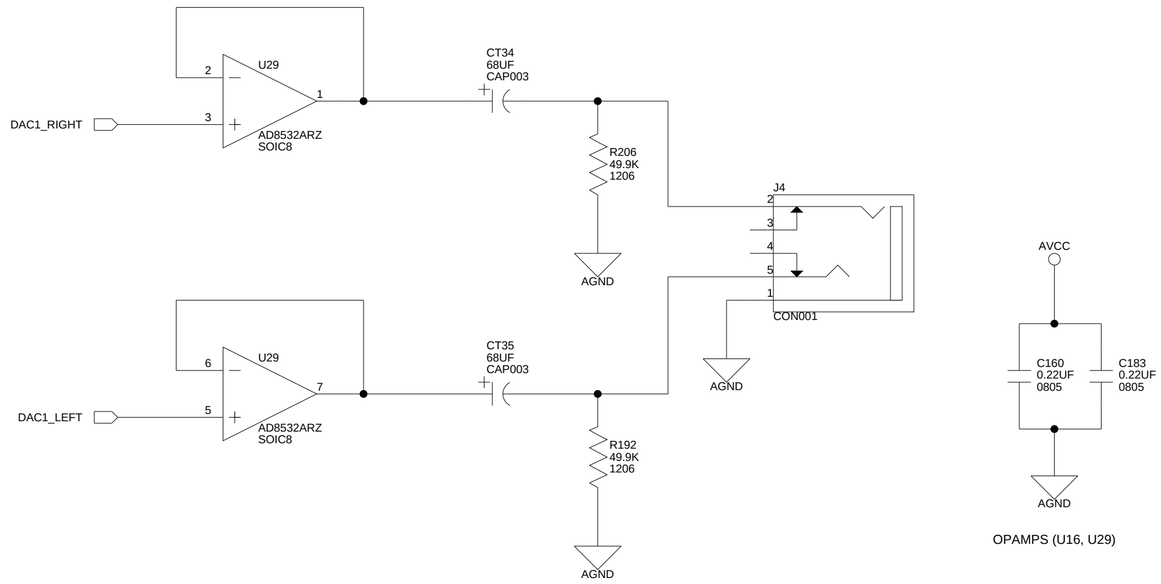

ANALOG DEVICES	20 Cotton Road Nashua, NH 03063 PH: 1-800-ANALOGD	
Title	ADSP-21161 EZ-KIT LITE AUDIO IN MIC/LINE, HEADPHONE OUT	
Size C	**Board No.** A0157-2000	**Rev** 3.0
Date 11-8-2006_10:30	**Sheet** 8 **of** 16	

DAC1 LEFT

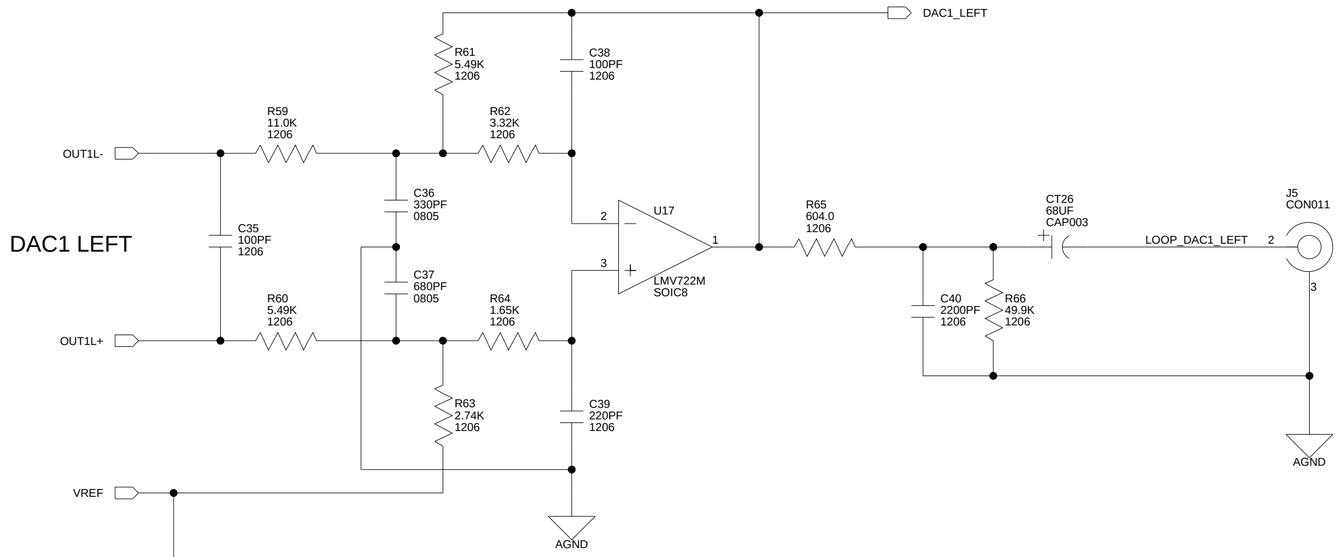

DAC1 RIGHT

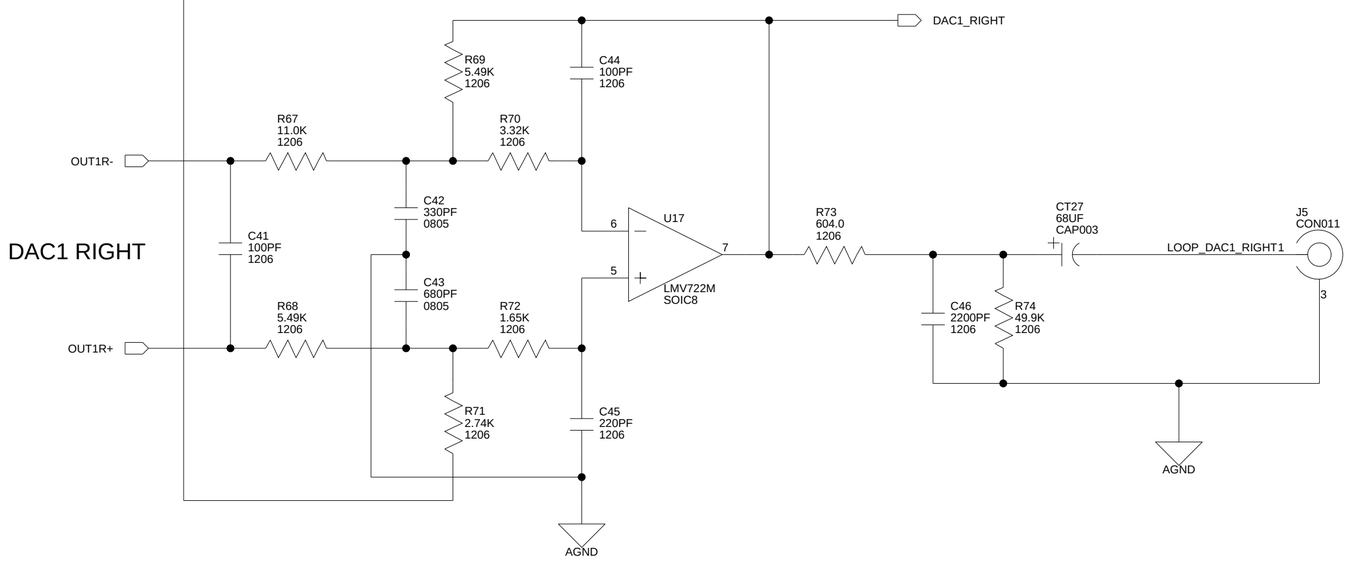

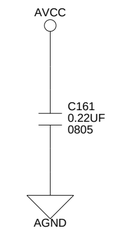

OPAMP (U17)

ANALOG DEVICES	20 Cotton Road Nashua, NH 03063 PH: 1-800-ANALOGD	
Title	ADSP-21161 EZ-KIT LITE AUDIO OUT 1	
Size C	**Board No.** A0157-2000	**Rev** 3.0
Date 11-8-2006_10:30	**Sheet** 9 **of** 18	

DAC2 LEFT

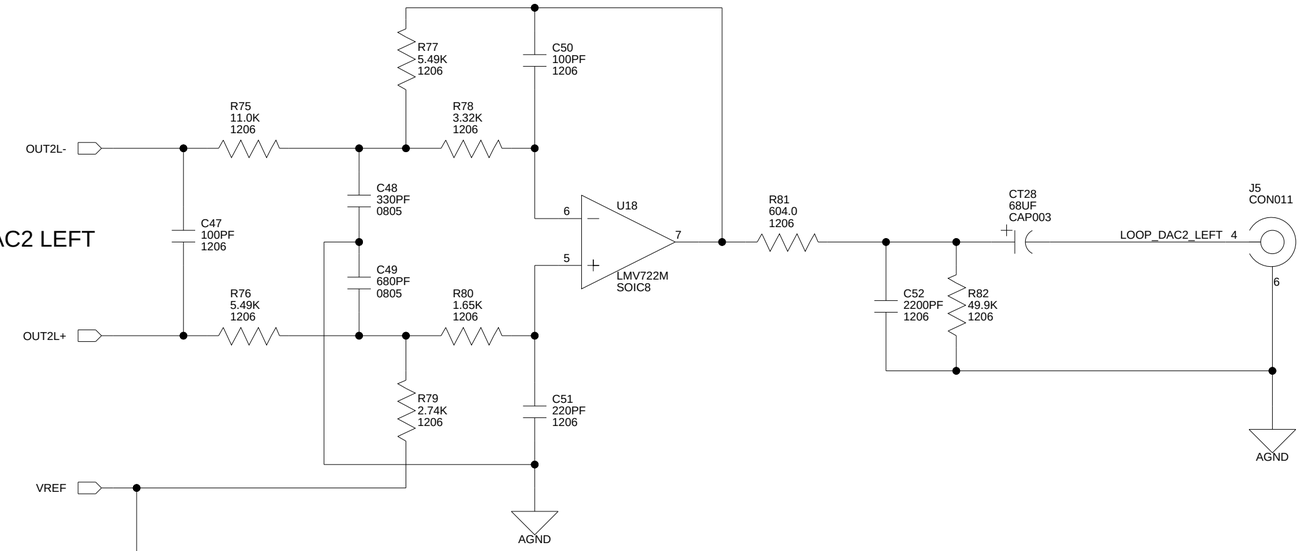

DAC2 RIGHT

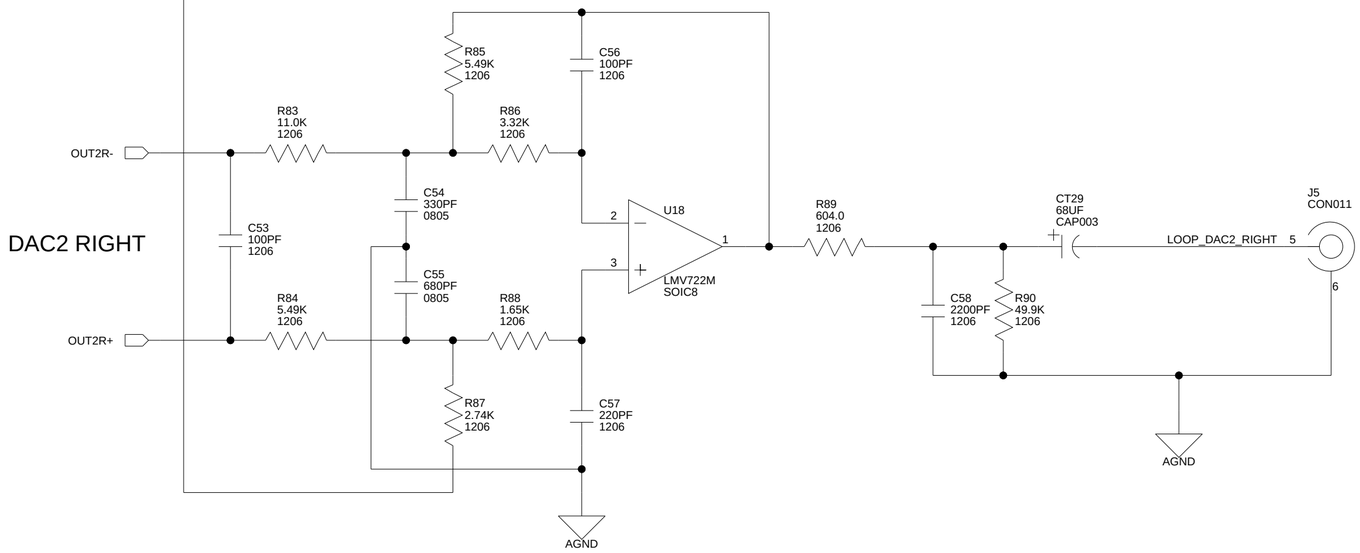

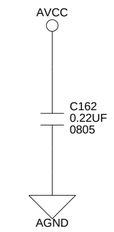

OPAMP (U18)

ANALOG DEVICES	20 Cotton Road Nashua, NH 03063 PH: 1-800-ANALOGD	
Title	ADSP-21161 EZ-KIT LITE AUDIO OUT 2	
Size C	**Board No.** A0157-2000	**Rev** 3.0
Date 11-8-2006_10:30	**Sheet** 10 **of** 18	

DAC3 LEFT

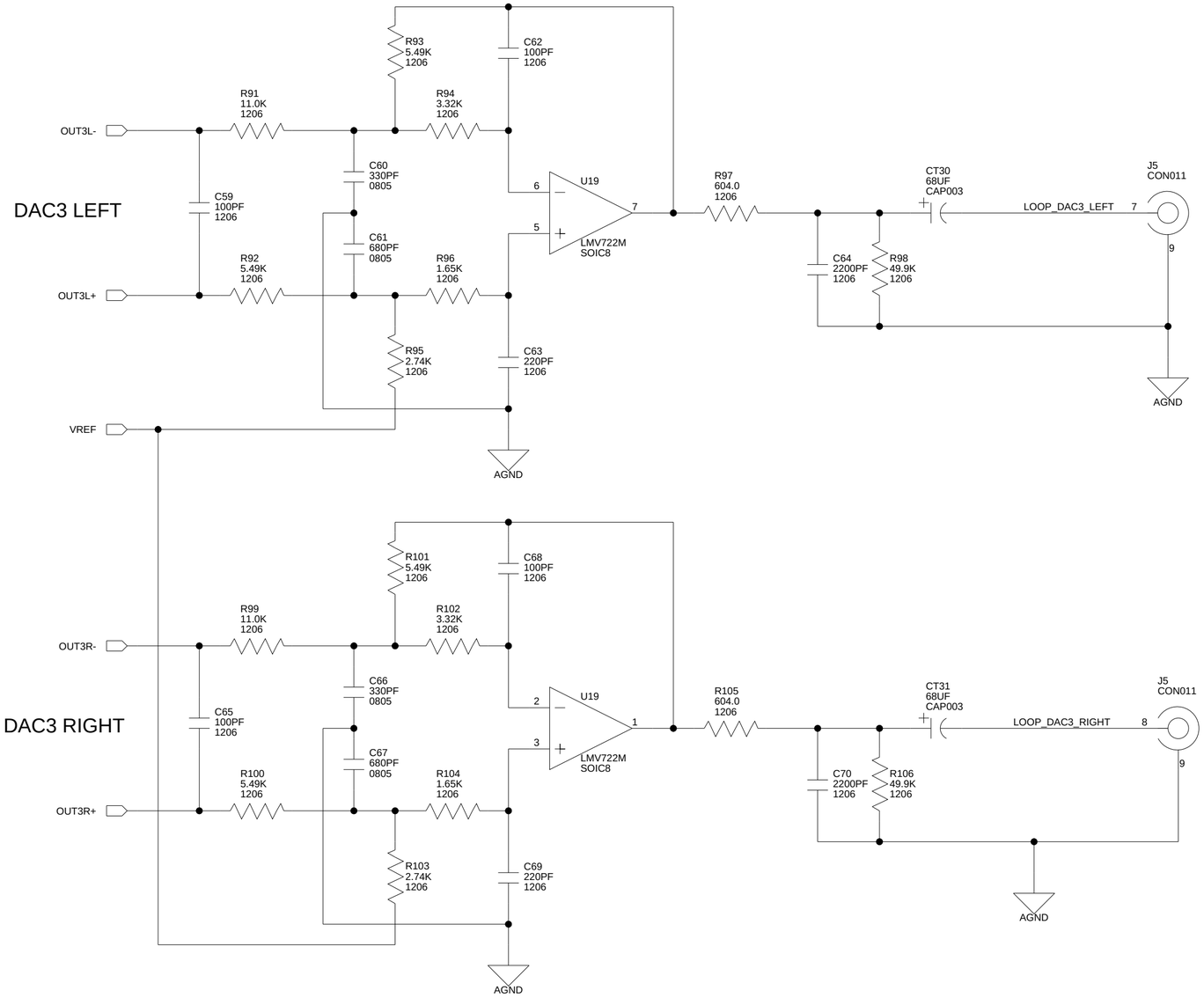

DAC3 RIGHT

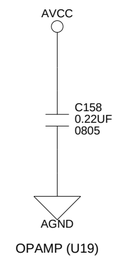

OPAMP (U19)

ANALOG DEVICES
20 Cotton Road
Nashua, NH 03063
PH: 1-800-ANALOGD

Title	ADSP-21161 EZ-KIT LITE AUDIO OUT 3	
Size C	**Board No.** A0157-2000	**Rev** 3.0
Date 11-8-2006_10:30	**Sheet** 11 **of** 18	

DAC4 LEFT

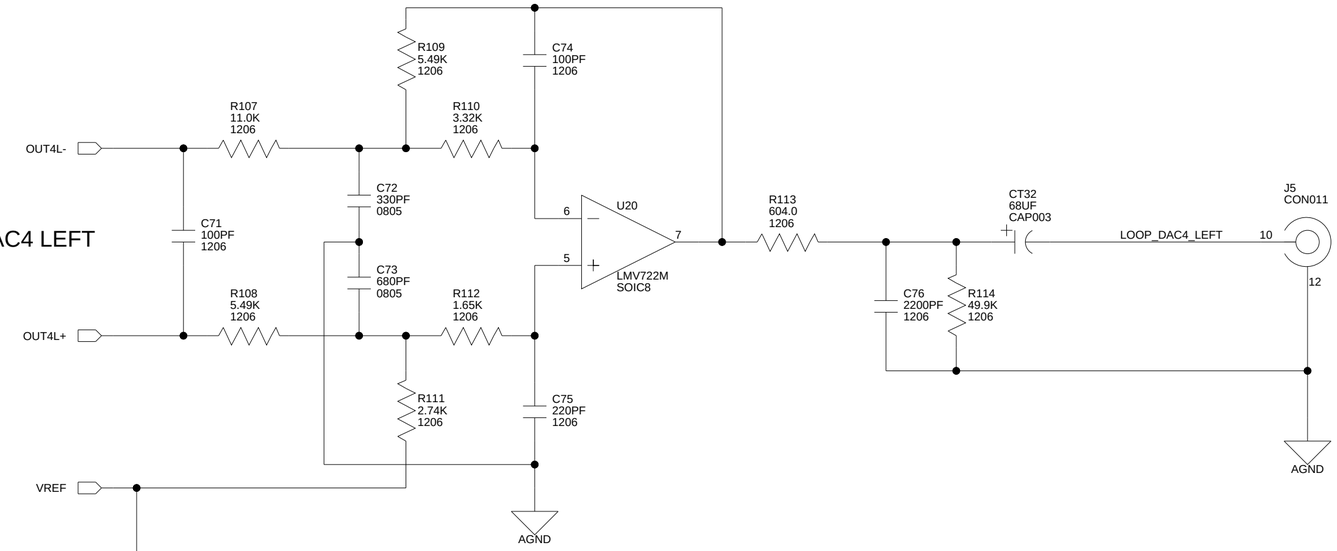

DAC4 RIGHT

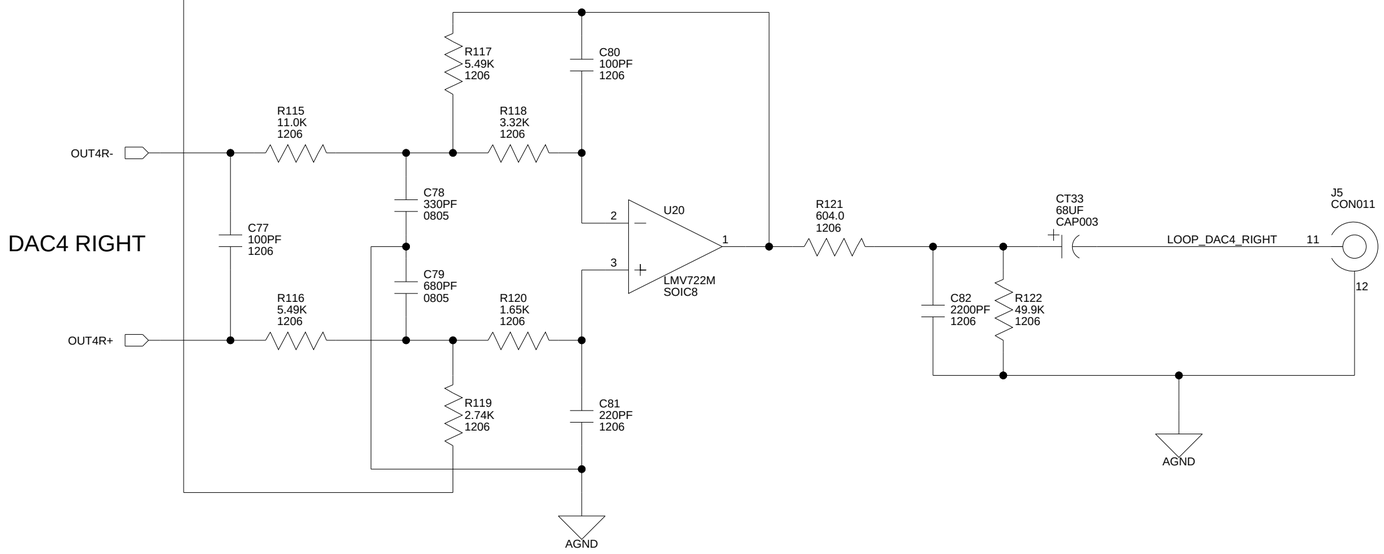

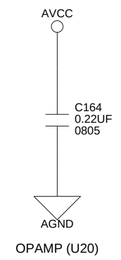

OPAMP (U20)

ANALOG DEVICES	20 Cotton Road Nashua, NH 03063 PH: 1-800-ANALOGD	
Title	ADSP-21161 EZ-KIT LITE AUDIO OUT 4	
Size C	**Board No.** A0157-2000	**Rev** 3.0
Date 11-8-2006_10:30	**Sheet** 12 **of** 18	

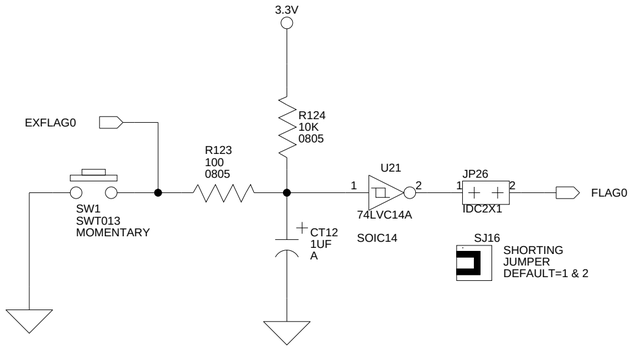

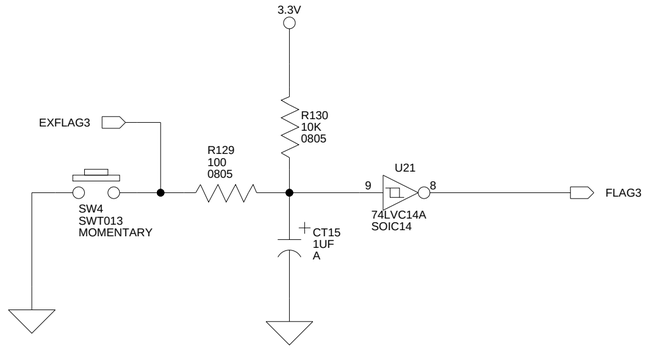

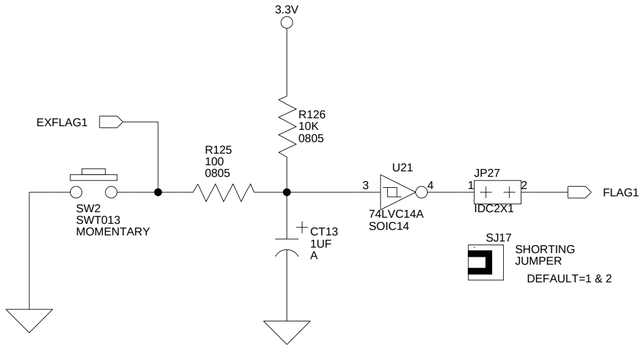

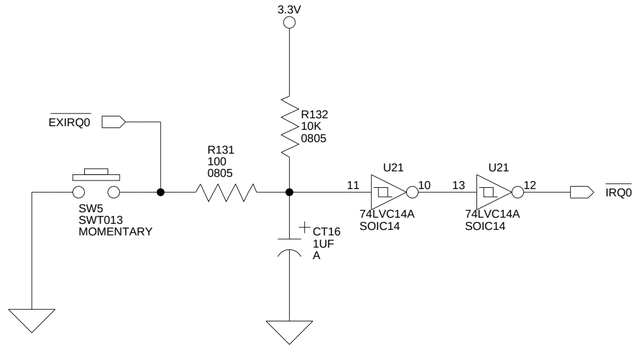

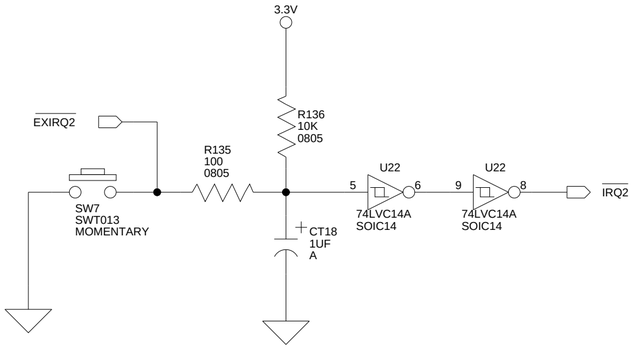

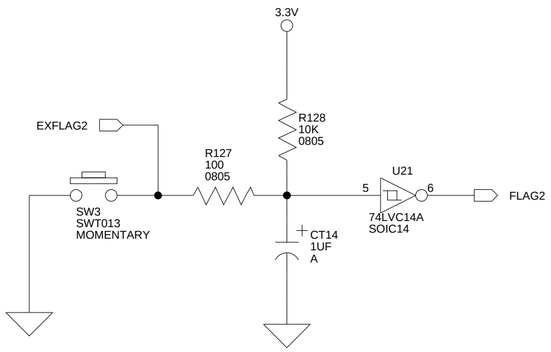

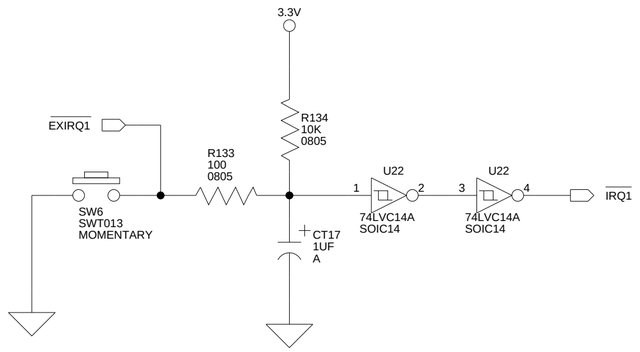

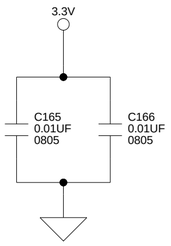

SCHMITT TRIGGERS (U21 & U22)

ANALOG DEVICES	20 Cotton Road Nashua, NH 03063 PH: 1-800-ANALOGD	
Title	ADSP-21161 EZ-KIT LITE PUSHBUTTONS	
Size C	**Board No.** A0157-2000	**Rev** 3.0
Date 11-8-2006_10:30	**Sheet** 13 **of** 16	

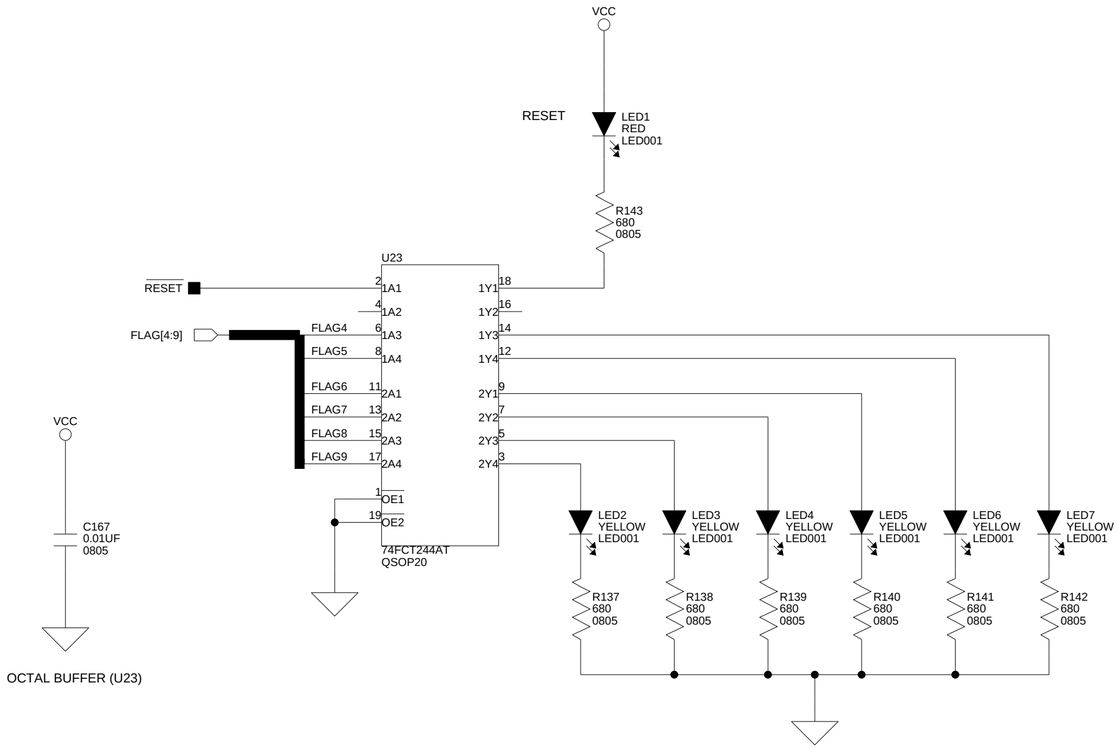

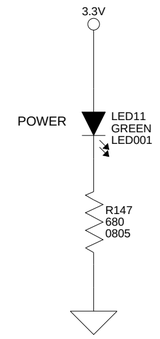

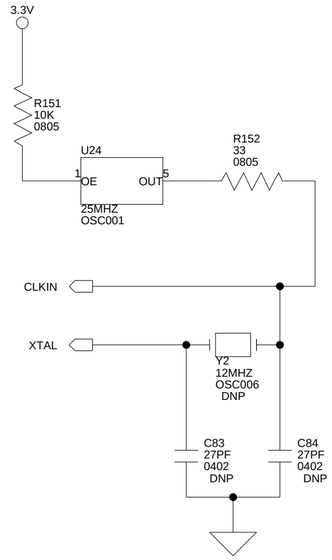

OSCILLATOR OR CRYSTAL CAN BE USED FOR THE 21161N

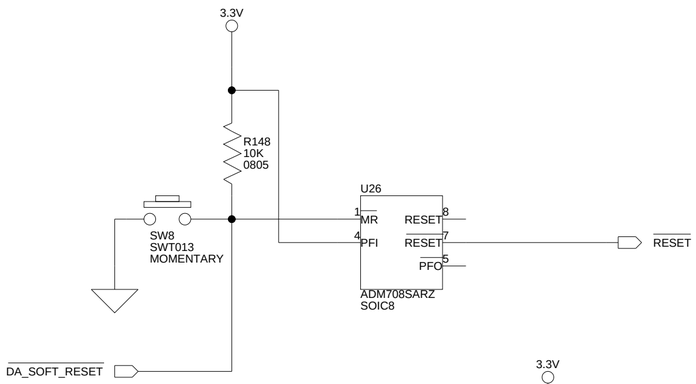

RESET MON (U26)

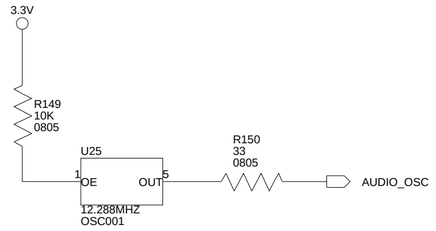

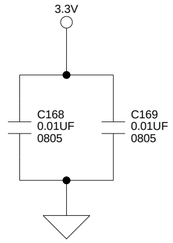

OSCILLATORS (U24 & U25)

ANALOG DEVICES	20 Cotton Road Nashua, NH 03063 PH: 1-800-ANALOGD	
Title	ADSP-21161 EZ-KIT LITE LEDS, RESET & OSCILLATORS	
Size C	**Board No.** A0157-2000	**Rev** 3.0
Date 11-8-2006_10:30	**Sheet** 14 **of** 16	

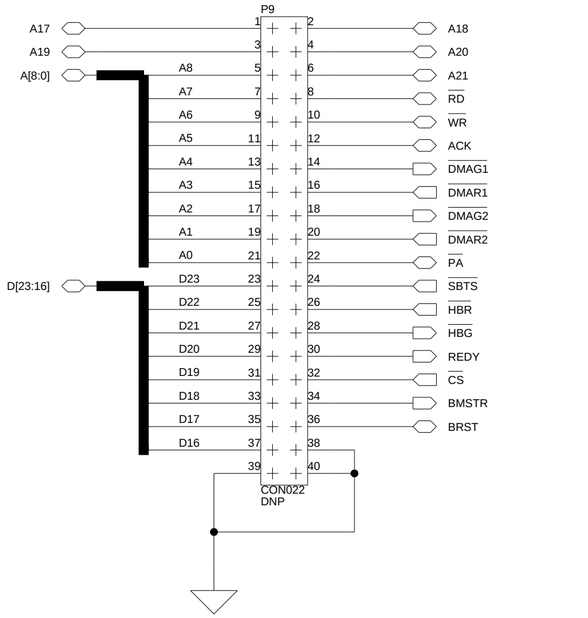

LINK PORT CONNECTORS

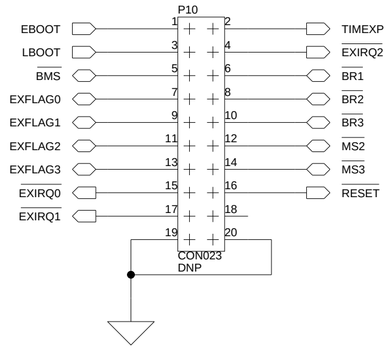

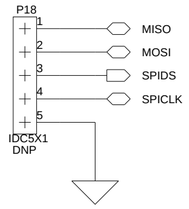

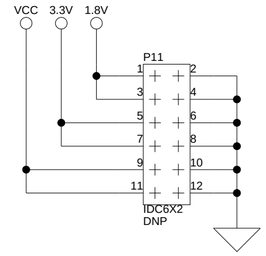

All USB interface circuitry is considered proprietary and has been omitted from this schematic.

When designing your JTAG interface please refer to the Engineer to Engineer Note EE-68 which can be found at http://www.analog.com

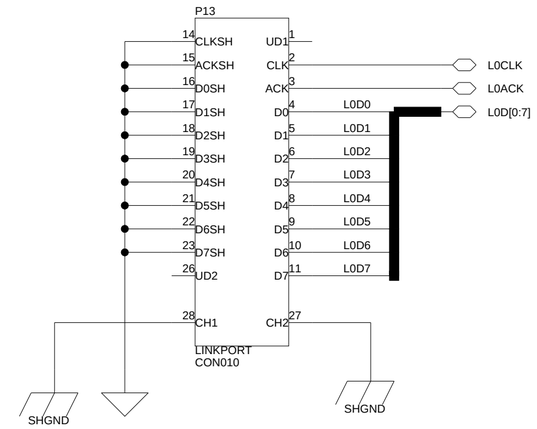

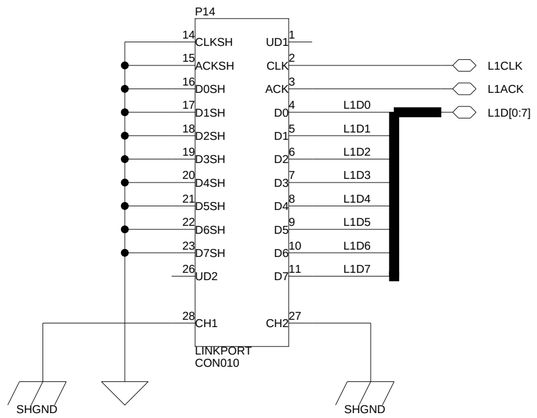

JP1 SHOULD NOT BE INSTALLED WHEN USING THE LINK PORT

SERIAL PORT CONNECTOR

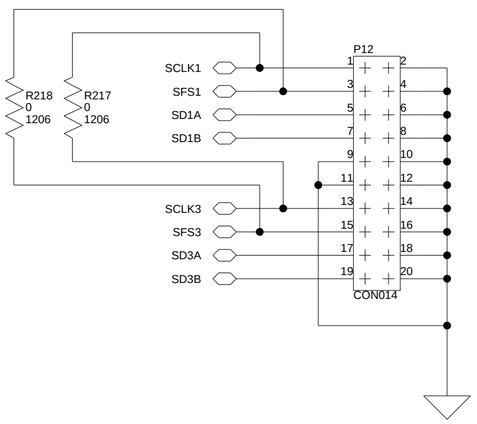

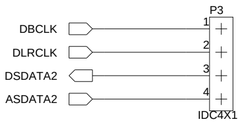

ANALOG DEVICES	20 Cotton Road Nashua, NH 03063 PH: 1-800-ANALOGD	
Title	ADSP-21161 EZ-KIT LITE CONNECTORS	
Size C	**Board No.** A0157-2000	**Rev** 3.0
Date 11-9-2006_13:34	**Sheet** 15 **of** 16	

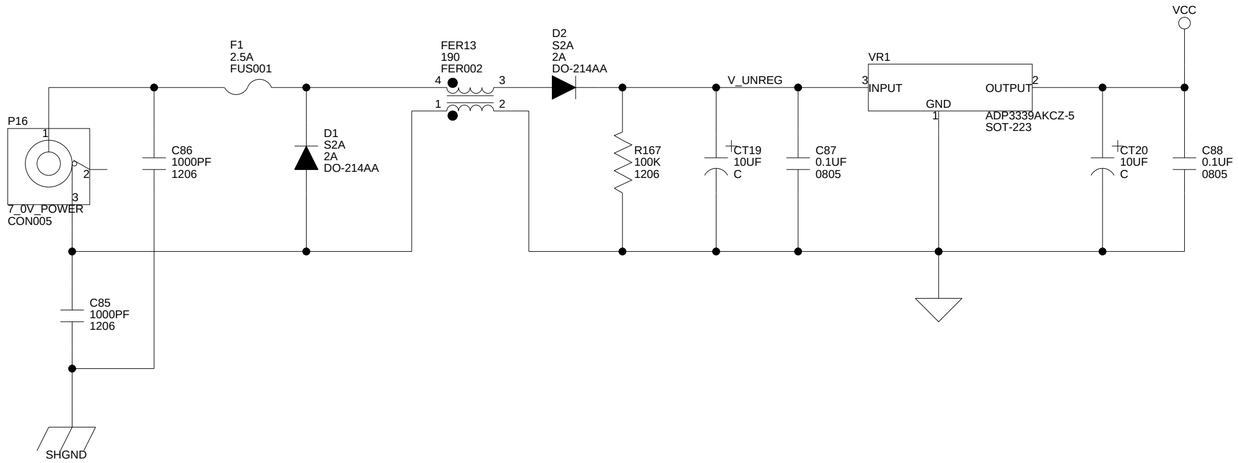

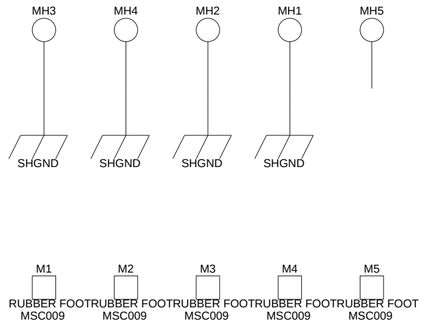

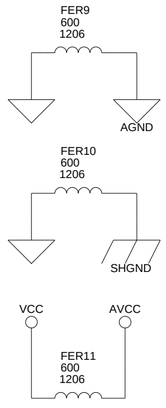

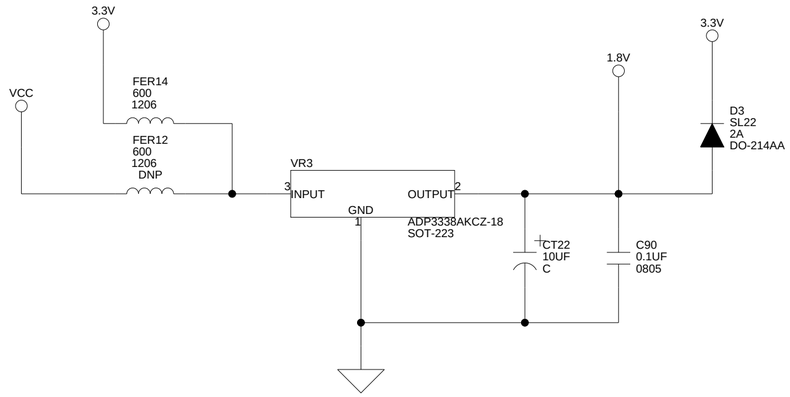

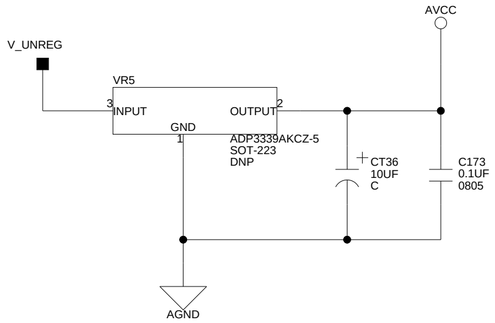

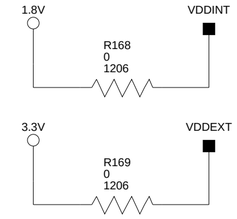

R168 & R169 ARE USED TO MEASURE CURRENT DRAW OF THE DSP

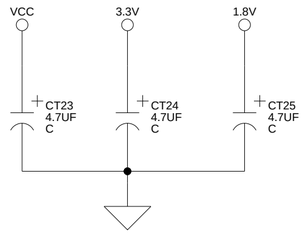

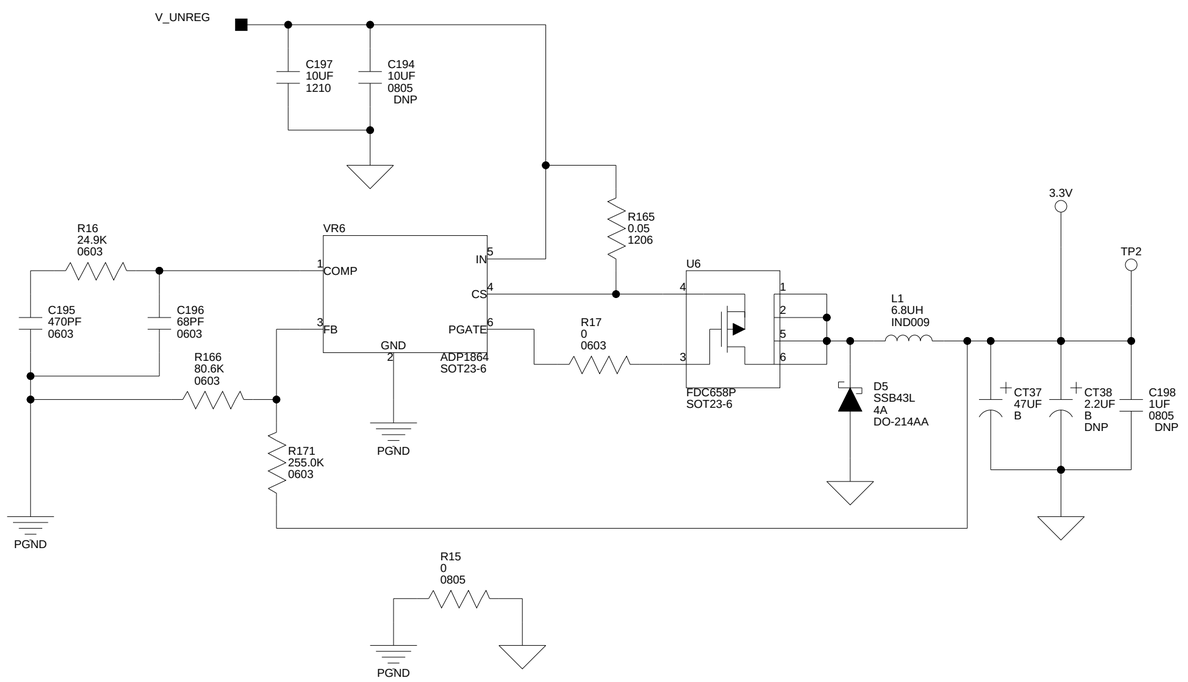

ANALOG DEVICES	20 Cotton Road Nashua, NH 03063 PH: 1-800-ANALOGD		
Title	ADSP-21161 EZ-KIT LITE POWER		
Size C	**Board No.** A0157-2000		**Rev** 3.0
Date 11-8-2006_10:30		**Sheet** 16 **of** 16	

I INDEX

A

AD1836, CAD and DAC
  control selection jumper (JP23), 2-11
  input channels, 1-11, 2-4
  interface, xii
  MCLK source select jumper (JP3), 2-8
  SPI port, 1-10, 1-11, 2-4
AD1852 digital-to-analog converters (DACs)
  MCLK source select jumper (JP3), 2-8
  sample frequency jumper (JP6), 2-9
  SPI port, 1-10, 1-12, 2-4
ADC2
  JP11 (MIC/LINE source select), 2-10
  mode select jumpers (JP7-8), 2-10
ADSP-21161N processors
  boot modes, 2-7
  clock mode select switch (SW10), 2-5
  core speed, 2-3
  core voltage, 2-3, 2-22
  ID settings, 2-12
  interrupt pins, 1-10
  memory map, 1-8
  memory select pins *See* ~BMS, ~MS1-0
analog audio, *See* audio
architecture, of this EZ-KIT Lite, 2-2
audio
  connectors (J2-6, P4), 2-18
  input channels, 1-11, 2-4
  interface, 1-11, 2-4
  output jacks, 1-12, 2-4

B

bill of materials, A-1
~BMS memory select pin, 1-8, 2-3, 2-7
board
  measurements, 2-22
  schematic, B-1
boot
  memory select pin, *See* ~BMS
  mode select switch (SW11), 2-7

C

CLK_CFG0-1 pins, 2-6
CLKDBL pin, 2-6
CLKIN pin, 2-5
clock mode select switch (SW10), 2-3, 2-5
codecs, *See* AD1836, AD1852
configuration, of this EZ-KIT Lite, 1-3
connectors
  diagram of locations, 1-4, 2-17
  J2 (RCA mono jack), 1-11, 2-4, 2-10, 2-18
  J3 (stereo jack), 1-11, 2-4, 2-10, 2-18
  J4 (stereo jack), 2-18
  J5 (RCA jack), 2-18
  J6 (RCA mono jack), 1-11, 2-8, 2-18
  P10 (host processor), 1-10, 1-11, 2-4, 2-19
  P11 (voltage), 2-19
  P12 (SPORT1, SPORT3), 2-19
  P13-14 (link port), 2-20
  P16 (power), 1-5, 2-20

P16 (power), 1-5, 2-20
P18 (SPI), 2-21
P4 (optical input), 1-11, 2-8, 2-18, 2-19
P9 (external port), 2-18
ZJ1 (USB), 1-5, 2-17
ZP4 (JTAG header), 2-21
contents, of this EZ-KIT Lite, 1-2
converters, *See* AD1836, AD1852
core
clock ratio, 2-6
voltage, 2-3, 2-22
CS8416 digital receivers
clock/sync signals, 1-12
data formats, 1-12
S/PDIF select jumper (P2), 2-8
SPI compatible mode, 1-12
VERF LED (LED12), 2-14
customer support, xvi

D

default configuration, of this EZ-KIT Lite, 1-3
digital
audio interface, *See also* AD1852
audio playback, 1-12
stereo channels, 1-11

E

EBOOT pin, 2-7
EPROM boot mode, 2-7
example programs, 1-13
expansion connectors (un-installed), xiv
external
data bus, 2-8
interrupts, 1-10
memory, 1-8, 1-9
external ports
clock ratios, 2-6
connector (P9), 2-18

F

features, of this EZ-KIT Lite, xii
FLAG0
enable jumper (JP1, JP4), 2-9
SW1/AD1836 SPI pin, 1-10, 2-11, 2-15
FLAG1
enable jumper (JP5), 2-9
SW2/AD1852 SPI pin, 1-10, 2-12, 2-15
FLAG10-11 (not connected) pins, 1-10
FLAG2-3 (SW3-4) pins, 1-10, 2-15
FLAG4-9 (LED2-7) pins, 1-10, 2-14
FLAG system registers, 1-9
flash memory, 1-8, 2-3, 2-7
frequency, 2-5, 2-9

G

general-purpose IO pins, xiii, 1-9, 2-15

H

host processor
boot mode, 2-7
interface connector (P10), 1-10, 1-11, 2-4, 2-19

I

input clock, 2-3
installation, of this EZ-KIT Lite, 1-5
internal memory, 1-8
interrupts
push buttons (SW5-7), 1-11
request pins (IRQ0-2), 1-11, 2-16

J

JTAG
connector (ZP4), 2-21
emulation port, 2-5

jumpers
  diagram of locations, 1-4
  JP11 (MIC/LINE source select), 1-11, 2-4, 2-10
  JP1 (FLAG0 enable), 2-9
  JP22 (~BMS enable), 2-7
  JP26 (SW1 enable), 2-11
  JP27 (SW2 enable), 2-12
  JP3 (MCLK source), 2-8
  JP4 (FLAG0 enable), 2-9
  JP5 (FLAG1 enable), 2-9
  JP6 (AD1852 frequency), 2-9
  JP7-8 (1836 input modes), 2-10
  JP9-10 (microphone gain), 2-10
  P17 (SDRAM disable), 2-8
  P2 (S/PDIF select), 1-11, 2-8

L

LBOOT pins, 2-7
LEDs
  diagram of locations, 1-4, 2-13
  LED11 (power), 1-5, 2-14
  LED12 (VERF), 1-12, 2-14
  LED1 (reset), 1-5, 2-13
  LED2-7 (FLAG4-9), 1-10, 2-14
  ZLED3 (USB monitor), 1-5, 2-15
license restrictions, 1-7
LINE IN
  jacks, 1-12
  stereo input channel, 2-4
LINE OUT jacks, 1-12, 2-4
link port
  boot mode, 2-7
  connectors (P13-14), 2-20
link ports
  disable jumper (P17), 2-8
  processor ID settings, 2-12

M

MCLK select jumper (JP3), 2-8
measurements, of this EZ-KIT Lite, 2-22
memory
  map, of this EZ-KIT Lite, 1-8
  select pins, *See* ~BMS, ~MS0-1
microphone
  circuit, 2-10
  input channel (MIC1), 2-4
  jacks, 1-12
MODE2 register, 1-9
~MS0-1 memory select pins, 1-8, 2-3
multiprocessor memory space, 1-8

N

no-boot mode, 2-7
notation conventions, xxii

O

oscillators
  CLKIN mode select switch (SW10), 2-5
  MCLK source select jumper (JP3), 2-8
  shipped with this EZ-KIT Lite, 2-3

P

package contents, 1-2
power
  input connector (P16), 1-5, 2-20
  LED (LED11), 1-5, 2-14
  specifications, 2-22
programmable flags, *See* FLAGx, SWx
push buttons
  See also switches by name (SWx), 2-13
  diagram of locations, 2-13

R

RCA jacks, 1-12, 2-4, 2-18

registration, of this EZ-KIT Lite, 1-3
reset
  LED (LED1), 2-13
  push button (SW12), 2-16
resistors
  R144-146, 2-12
  R155-157, 2-12
restrictions, of evaluation license, 1-7

S

sample frequency
  jumper (JP6), 2-9
  of audio interface, 1-12
schematic, of this EZ-KIT Lite, B-1
SDRAM
  connections, 2-3
  disable jumper (JP1), 2-8
  memory map, 1-8
serial boot mode (via SPI), 2-7
serial peripheral interconnect (SPI)
  audio interface, 2-4
  ports, 2-4
  select pins, 1-10
  SPORT1 connection, 2-11
Sony/Philips Digital Interface Format, *See* S/PDIF
S/PDIF
  connectors, 2-14
  select jumper (P2), 2-8
  stream as MCLK source, 2-8
specifications, of this EZ-KIT Lite, 2-22
SPORT0, 2-4
SPORT1
  connections, 2-11
  connector (P12), 2-19
SPORT2, 2-4
SPORT3
  connections, xiv
  connector (P12), 2-19
SRAM memory, 1-8
startup, of this EZ-KIT Lite, 1-5
stereo
  input/output channels, 1-11
  jack (J3), 1-11, 2-4
SW10 (clock mode select) switch, 2-5
SW11 (boot mode select) switch, 2-7
SW12 (reset) push button, 2-16
SW1 (FLAG0) enable push button, 1-10, 2-11, 2-15
SW2-4 (FLAG1-3) push buttons, 1-10, 2-15
SW5-7 (IRQ0-2) push buttons, 1-11, 2-15
switches
  See also switches by name (SWx)
  diagram of locations, 2-5
synchronous dynamic random access memory, *See* SDRAM
system architecture, of this EZ-KIT Lite, 2-2

T

Target Options dialog box, 1-9

U

USB
  cable, 1-3
  connector (ZJ1), 2-17
  interface, 2-16, 2-21
  monitor LED (ZLED3), 2-15

V

VERF flag (LED9), 1-12, 2-14
VisualDSP++
  documentation, xxi
  environment, 1-5
voltage regulators, xiii, 2-22