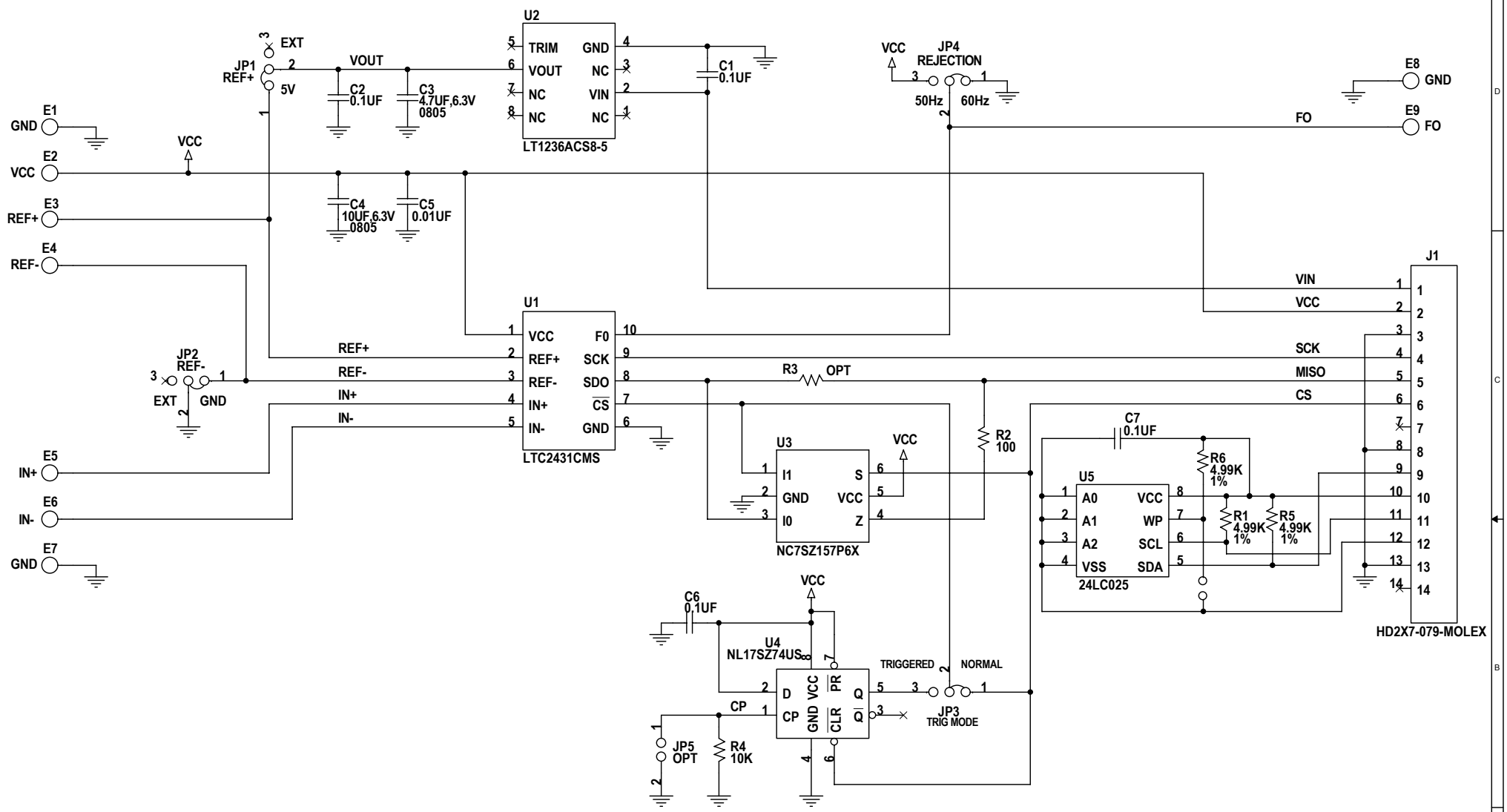

NOTES: UNLESS OTHERWISE SPECIFIED

1. ALL RESISTORS ARE IN OHMS, 0603.
   ALL CAPACITORS ARE IN MICROFARADS, 0603.
2. INSTALL SHUNT ON JP1-JP4 PIN 1 AND 2.

CONTRACT NO.	LINEAR TECHNOLOGY 1630 McCarthy Blvd. Milpitas, CA 95035 Phone: (408)432-1900 Fax: (408)434-0507 LTC Confidential-For Customer Use Only
APPROVALS	
DRAWN: KIM T.	
CHECKED:	TITLE: SCHEMATIC
APPROVED:	20-BIT DIFFERENTIAL ADC IN MS10 PACKAGE
ENGINEER: MARK T.	SIZE A — DWG NO. DC586A-1 * LTC2431CMS — REV A
DESIGNER:	DATE: Tuesday, March 04, 2003 — SHEET 1 OF 1