REVISION HISTORY				
ECO	REV	DESCRIPTION	APPROVED	DATE
—	2	PRODUCTION	JIM N.	01-12-12

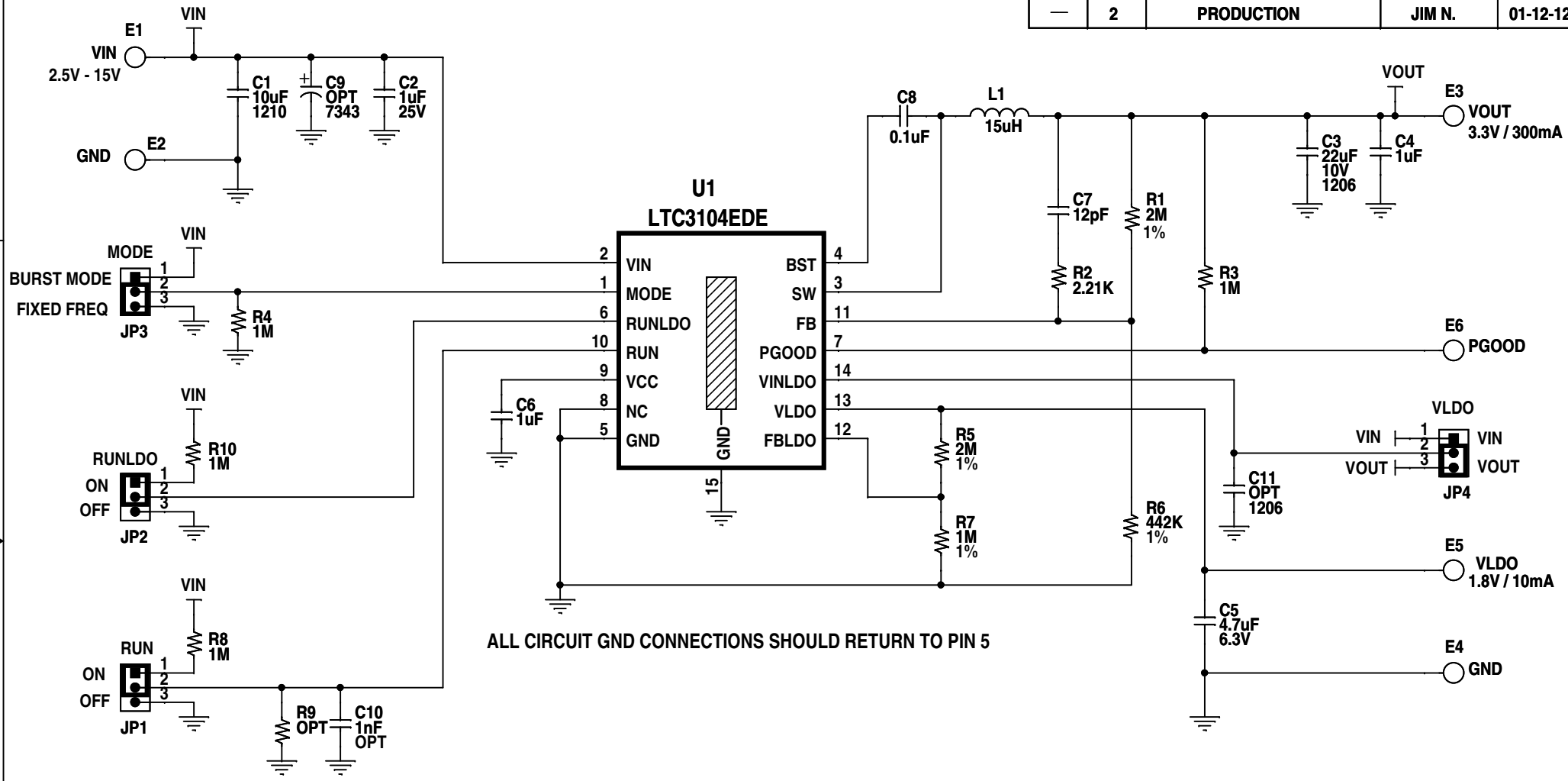

NOTE: UNLESS OTHERWISE SPECIFIED

1. ALL RESISTORS ARE 0402 AND CAPACITORS ARE 0603.
2. INSTALL SHUNTS AS SHOWN.

CUSTOMER NOTICE

LINEAR TECHNOLOGY HAS MADE A BEST EFFORT TO DESIGN A CIRCUIT THAT MEETS CUSTOMER-SUPPLIED SPECIFICATIONS; HOWEVER, IT REMAINS THE CUSTOMER'S RESPONSIBILITY TO VERIFY PROPER AND RELIABLE OPERATION IN THE ACTUAL APPLICATION. COMPONENT SUBSTITUTION AND PRINTED CIRCUIT BOARD LAYOUT MAY SIGNIFICANTLY AFFECT CIRCUIT PERFORMANCE OR RELIABILITY. CONTACT LINEAR TECHNOLOGY APPLICATIONS ENGINEERING FOR ASSISTANCE.

THIS CIRCUIT IS PROPRIETARY TO LINEAR TECHNOLOGY AND SUPPLIED FOR USE WITH LINEAR TECHNOLOGY PARTS.

APPROVALS	
PCB DES.	LT
APP ENG.	JIM N.

SCALE = NONE

LINEAR TECHNOLOGY
1630 McCarthy Blvd.
Milpitas, CA 95035
Phone: (408)432-1900 www.linear.com
Fax: (408)434-0507
LTC Confidential-For Customer Use Only

TITLE: SCHEMATIC

15V, 300mA, SYNCHRONOUS STEP-DOWN DC/DC CONVERTER WITH 2.8uA QUIESCENT CURRENT AND 10mA LDO

SIZE	IC NO.	REV.
N/A	LTC3104EDE DEMO CIRCUIT 1754A	2

DATE: Thursday, January 12, 2012

SHEET 1 OF 1