REVISION HISTORY				
ECO	REV	DESCRIPTION	APPROVED	DATE
-	03	PRODUCTION FABRICATION	W. Li	01-02-18

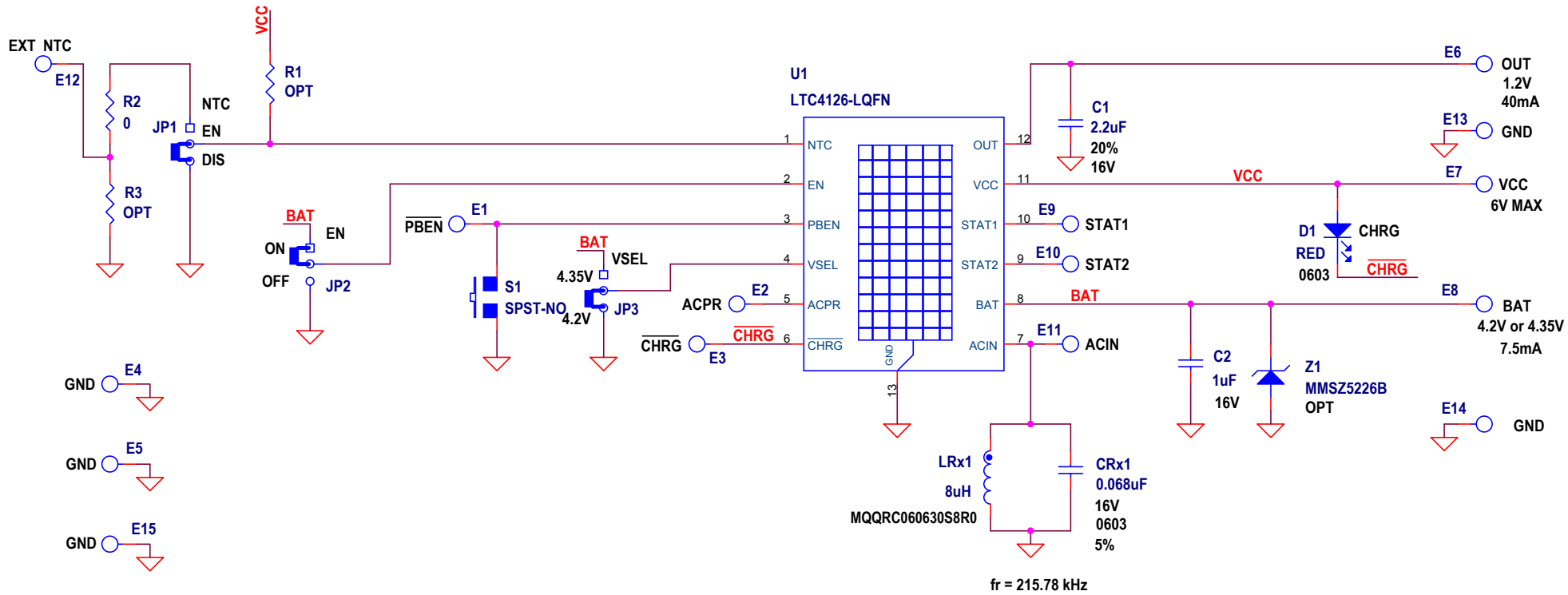

PCA ADDITIONAL PARTS

PCB1	PCB, DC2662A REV03
STNCL1	TOOL, STENCIL, 700-DC2662A REV03
LB1	LABEL
MP1	TAPE,1/8" x 36yds,DOUBLE SIDED POLYIMIDE

UNLESS NOTED:
RESISTORS: OHMS, 0402, 1%, 1/16W
CAPACITORS: uF, 0402, 10%, 50V

CUSTOMER NOTICE

LINEAR TECHNOLOGY HAS MADE A BEST EFFORT TO DESIGN A CIRCUIT THAT MEETS CUSTOMER-SUPPLIED SPECIFICATIONS; HOWEVER, IT REMAINS THE CUSTOMER'S RESPONSIBILITY TO VERIFY PROPER AND RELIABLE OPERATION IN THE ACTUAL APPLICATION. COMPONENT SUBSTITUTION AND PRINTED CIRCUIT BOARD LAYOUT MAY SIGNIFICANTLY AFFECT CIRCUIT PERFORMANCE OR RELIABILITY. CONTACT LINEAR TECHNOLOGY APPLICATIONS ENGINEERING FOR ASSISTANCE.

THIS CIRCUIT IS PROPRIETARY TO LINEAR TECHNOLOGY AND SUPPLIED FOR USE WITH LINEAR TECHNOLOGY PARTS.

APPROVALS	
PCB DES.	NC
APP ENG.	W. Li

SCALE = NONE

ANALOG DEVICES | POWER BY LINEAR™
www.analog.com

TITLE: SCHEMATIC
7.5mA WIRELESS Li-ION CHARGER WITH 1.2V STEP-DOWN DC/DC CONVERTER, fr = 215.78 kHz

SIZE	IC NO.	REV.
	LTC4126 DEMO CIRTCUIT 2662A	03

DATE: 01-02-18 SHEET 1 OF 1