DESCRIPTION

Demonstration circuits 981A and 981B features the LTC4263 in single port Power Over Ethernet (PoE) Power Sourcing Equipment (PSE) Midspan and Endpoint solutions. The LTC4263 is an autonomous single-channel PSE controller for use in IEEE802.3af compliant PoE systems. It includes an on-board planar power MOSFET, internal inrush, current limit, and short circuit control, Powered Device (PD) detection and classification circuitry, and selectable AC or DC disconnect sensing. On-board control algorithms provide complete PSE Control operation without the need of a microcontroller. The LTC4263 simplifies PSE implementation, needing only a single 48V supply and a small number of passive support components. Other options shown on the DC981A include Legacy PD detection enable, Midspan back off timer enable, power class enforce mode, power management enable. An LED for each port is driven by the respective LTC4263 to indicate the state of the port.

Design files for this circuit board are available. Call the LTC factory.

LTC is a trademark of Linear Technology Corporation

Table 1. Typical DC981 Performance Summary (T_A = 25°C)

PARAMETER	CONDITION	VALUE
Supply Voltage	Voltage for IEEE802.3af Compliance at Port Output	46V to 57V
Midspan Mode Detection Backoff	Midspan Enabled, Failed Detection	3.2 seconds
Detection Range	Valid IEEE802.3af PD Detection	17k to 29.7k
Set Maximum Allocated Power	Power Management Enabled	17W
Ethernet Powered Pairs Pinout	Endpoint PSE, Alternative A (MDI) Midspan PSE, Alternative B	1/2(+), 3/6(-) 4/5(+) , 7/8 (-)

QUICK START PROCEDURE

Demonstration circuit 981 is easy to set up to evaluate the performance of the LTC4263. Refer to Figure 2 for proper measurement equipment setup and follow the procedure below.

1. Place jumpers in the following positions:

   JP1 EN

   JP2 EN

   JP3 DIS

   JP4 AC

   JP5 AC

   JP6 EN

2. Insert daughter card (DC981B) to main board (DC981A) at polarized connector J3.
3. Apply 48V across VDD48 and VSS.
4. Connect a scope probe at VOUT_MD and VOUT_EP both referenced to positive rail VDD48.
5. Connect a valid PD to either Midspan PSE or Endpoint PSE.
6. Connect a second PD to the open port.

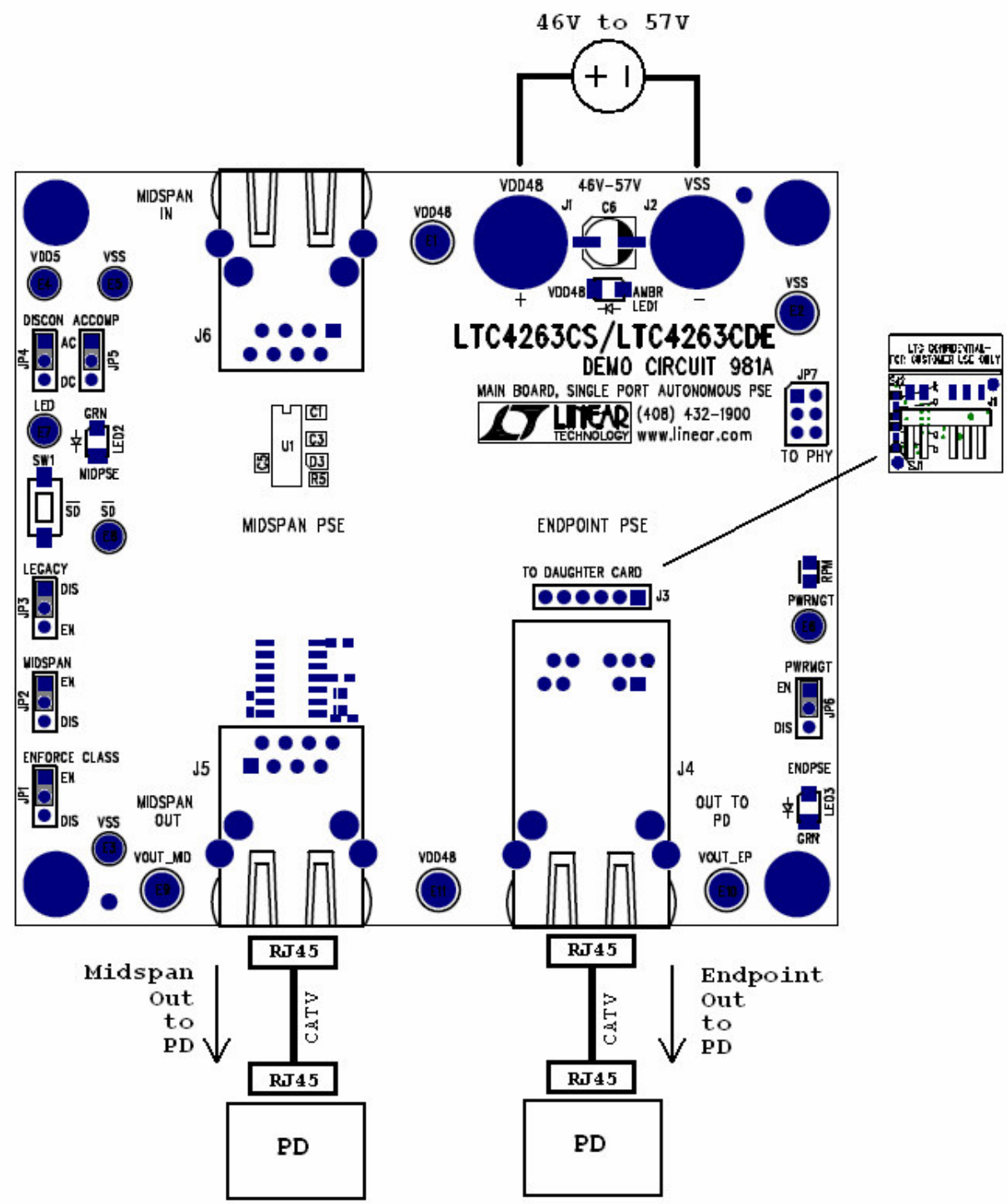

Figure 1. Basic DC981A/B Equipment Setup

OPERATING PRINCIPLES

DC981 provides two implementations of a PSE controlled by the LTC4263, a Midspan PSE and an Endpoint PSE. A single 48V supply is all that is required to power the board. This in turn provides power to the Midspan PSE and Endpoint PSE outputs. On each solution, an LTC4263 provides detection of a PD, classification, power management, safe power on of the PD, port current limit, and disconnect detection.

Midspan PSE and Midspan Mode

In the Midspan solution, a device (router, switch, etc.) that does not have PoE is connected to MIDSPAN IN. Data is passed through to MIDSPAN OUT along with PoE which goes out to a PD. Power is applied directly to Ethernet pairs 4/5 and 7/8. The LTC4263 circuitry sits in a small layout area behind the RJ45 connector and switches power on the negative rail. To show the different functions of the LTC4263, jumpers allow for the user to select the options of AC or DC disconnect, legacy detection, Midspan backoff timing, and class enforcement. An LED that shows the status of the port is driven by a switcher in the LTC4263 to improve efficiency when VDD5 is provided internally. Push button switch SW1 ties the shutdown pin to ground to disable the LTC4263 in the Midspan solution.

A PSE implementing Alternative B pin out must back off from detection for at least 2 seconds after a failed attempt. This is to avoid conflict of Detection, for example, should a potential Endpoint PSE and Midspan PSE be connected to the same PD. To enable this feature, set JP2 to DIS. JP2 ties the MIDSPAN pin to VDD5 to enable the LTC4263 backoff timer or to VSS to disable. A 3.2 second delay occurs after every failed detect cycle unless the result is open circuit. If held at VSS, no delay occurs after failed detect cycles.

Endpoint PSE

The Endpoint solution is primarily shown on a small daughter card (DC981B). This card is the same height and width as the integrated RJ45 connector that it slides behind on the main board (DC981A). The RJ45 includes Ethernet magnetics and common mode termination. A layout option shows the same components can be placed under the same RJ45 connector. The minimum connections to the daughter card are VSS, VDD48 and VOUT. Power is switched over from the daughter card out to the Ethernet data pairs (1/2 and 7/8). A PHY can be connected to the “TO PHY” to pass data through to the data pairs along with PoE. LED drive and power management pins are also brought out for additional board functions. The board is set up for AC disconnect, but can be reworked for DC disconnect by removing components and replacing with shorts in certain locations. Two solder jumpers also provide selectable options for legacy detection and class enforce.

Power Management

The Midspan and Endpoint PSE, although separate solutions on the DC981, are tied together at the PWRMGT pin for demonstration of the LTC4263 power management capability. Programmable onboard power management circuitry allows multiple LTC4263s to allocate and share power in multi-port systems, allowing maximum utilization of the 48V power supply – all without the intervention of a host processor.

The LTC4263 sources current at the PWRMGT pin proportional to the class of the PD that it is powering. The voltage of this pin is checked before powering the port. The port will not turn on if this pin is more than 1V above VSS. The PWRMGT pins of the LTC4263s are tied together and connect to a resistor (RPM) and capacitor (CPM) in parallel to VSS to implement power management among multiple ports. This resistor is selected with the following equation:

$$R_{PM} = 213k * W / P_{FULL_LOAD}$$

On the DC981A, the default R_{PM} is 12.4k for a full load power of 17W.

Table 2. Power Management Voltage

PD CLASS	POWER REQUEST	IPM (TYP)	VPM*
Class 1	4W	19µA	236mV
Class 2	7W	33µA	409mV
Class 0, 3, or 4	15.4W	73µA	905mV

*R_{PM} = 12.4k

Table 3. Powered Device Combinations

PD COMBINATION	1ST PD	2ND PD
Class 1 / Class 1	Powered	Powered
Class 1 / Class 2	Powered	Powered
Class 1 / Class 3**	Powered	Power Denied
Class 2 / Class 2	Powered	Powered
Class 2 / Class 3**	Powered	Power Denied
Class 3 **/ Class 3**	Powered	Power Denied

**Class 3 substitutable with Class 0 or 4.

If power management is not used, move JP6 to DIS to tie the PWRMGT pins to VSS and disable this feature.

Class Enforce Mode

ENFORCE CLASS jumper JP1 ties the ENFCLS pin of the LTC4263 to either VDD5 or VSS to respectively enable or disable class enforce current limits. If held at VDD5, the LTC4263 will reduce the ICUT threshold for Class 1 or Class 2 PDs. If ENFCLS is held at VSS, ICUT remains at 375mA (typical) for all classes.

Table 4. Port Current Limit According to Class

PD CLASS	CURRENT THRESHOLD (TYPICAL)
Class 1	100mA
Class 2	175mA
Class 0, 3, 4, or Class Enforce Disabled	375mA

LED Drive

An LED pin indicates the state of the port controlled by the LTC4263. When the port is powered, the LED is on; when disconnected or detecting, the LED is off. If an invalid signature is detected or a fault occurs, the LED will flash a pattern that the user or host system can read to indicate the nature of the problem. When run from a single 48V supply, the LED pin can operate as a simple switching current source to reduce power dissipation in the LED drive circuitry.

VDD5 Option

The logic 5V power supply can be supplied from the internal LTC4263 5V supply or an external 5V supply when above the internal supply. If the internal regulator is used, this pin should only be connected to the bypass capacitor and to any logic pins of the LTC4263 that are being held at VDD5.

AC and DC Disconnect

AC and DC disconnect are two different methods of detecting whether a valid PD is present and requires power. AC disconnect is the default method for the DC981 but can be converted to DC disconnect in the Midspan solution through two jumpers. Moving DISCON (JP4) to DC will short the ACCOUT pin to VSS and configure the LTC4263 to DC disconnect. Moving jumper setting for ACCOMP (JP5) to DC bypasses the AC blocking diode and removes the RC used for AC disconnect from the main circuit.

Legacy Detection

LEGACY jumper JP3 controls whether legacy detect is enabled. If the LEGACY pin is held at VDD5 (EN selected), legacy detect is enabled and testing for a large capacitor is performed to detect the presence of a legacy PD on the port. If held at VSS (DIS selected), only IEEE 802.3af compliant PDs are detected. If left floating (no jumper), the LTC4263 enters force-power-on mode and any PD that generates between 1V and 10V when biased with 270µA of detection current will be powered as a legacy device. This mode is useful if the system uses a differential detection scheme to detect legacy devices. Warning: Legacy modes are not IEEE 802.3af compliant.

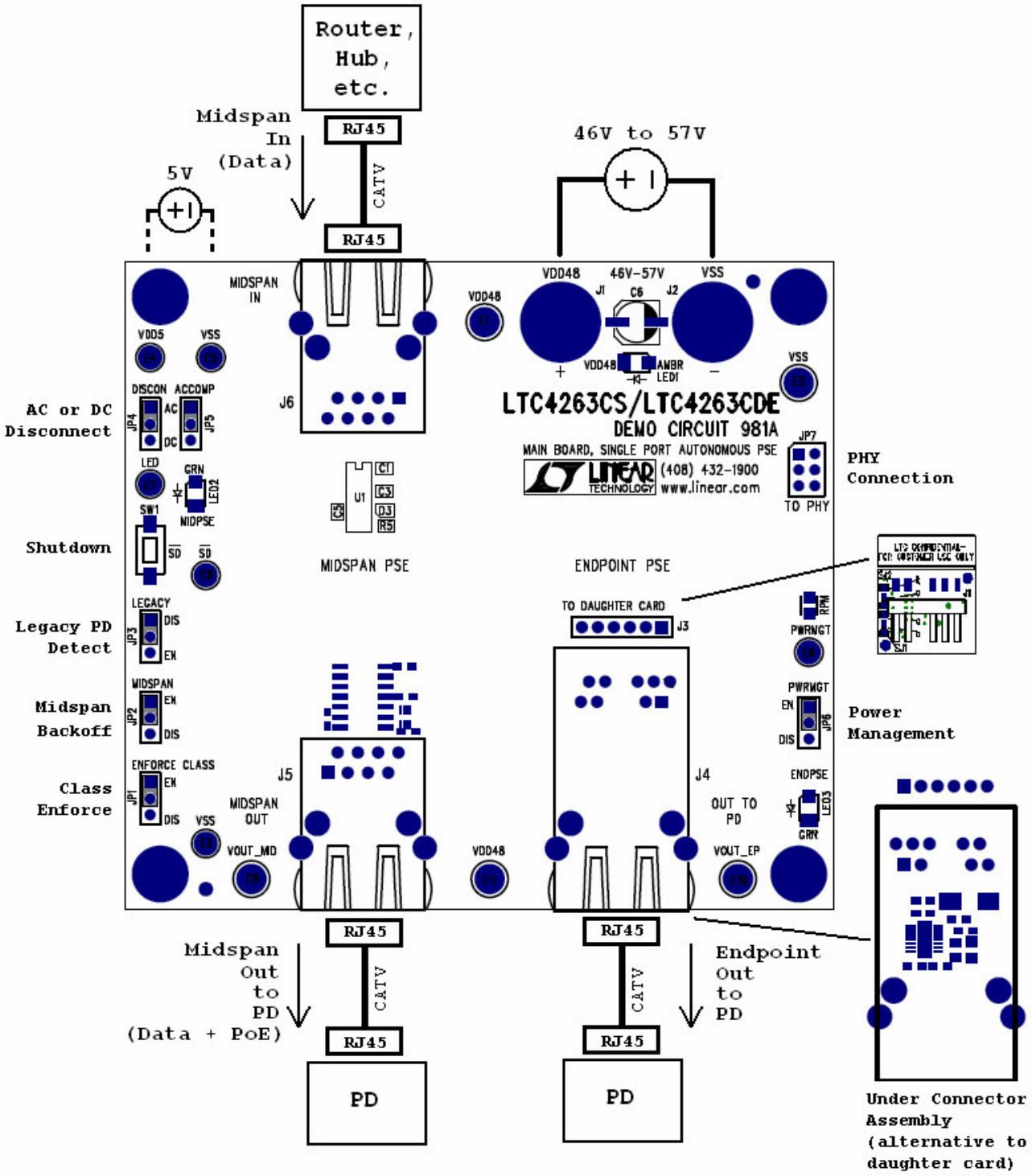

Figure 2. DC981 Options

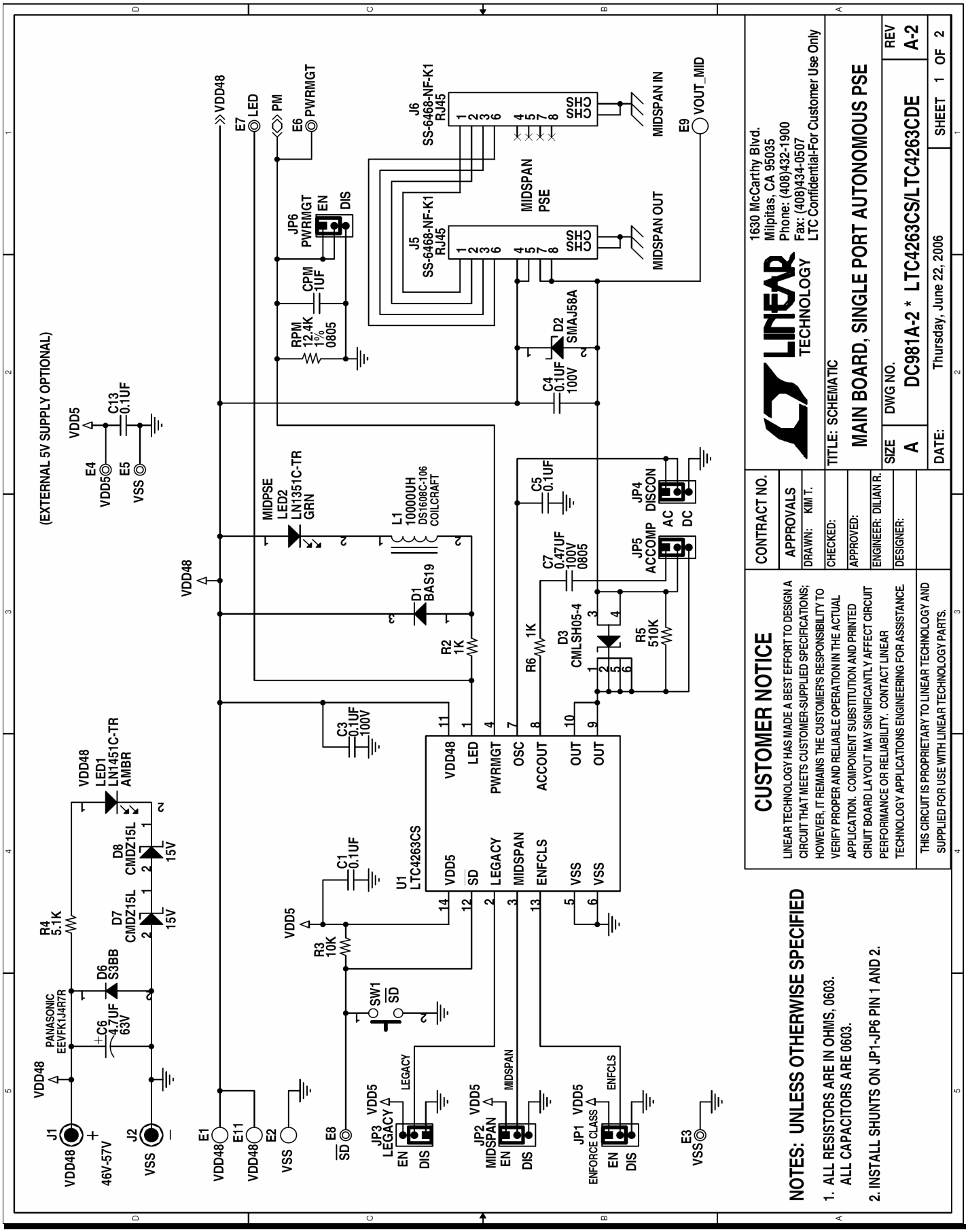
(EXTERNAL 5V SUPPLY OPTIONAL)
VDD48
E7 LED
E6 PWRMGT
PM
J6 SS-6468-NF-K1 RJ45
J5 SS-6468-NF-K1 RJ45
MIDSPAN PSE
MIDSPAN IN
MIDSPAN OUT
E9 VOUT_MID
JP6 PWRMGT EN DIS
CPM 1UF
RPM 12.4K 1% 0805
D2 SMAJ58A
C4 0.1UF 100V
VDD5
C13 0.1UF
E4 VDD5
E5 VSS
MIDPSE LED2 LN1351C-TR GRN
L1 10000UH DS1608C-106 COILCRAFT
D1 BAS19
R2 1K
C5 0.1UF
JP4 DISCON AC DC
JP5 ACCOMP
C7 0.47UF 100V 0805
R6 1K
D3 CMLSH05-4
R5 510K
C3 0.1UF 100V
U1 LTC4263CS
VDD48 LED PWRMGT OSC ACCOUT OUT OUT
VDD5 SD LEGACY MIDSPAN ENFCLS VSS VSS
C1 0.1UF
R3 10K
SW1 SD
VDD48 LED1 LN1451C-TR AMBR
D8 CMDZ15L 15V
D7 CMDZ15L 15V
R4 5.1K
D6 S3BB
PANASONIC EEVFK1J4R7R
C6 4.7UF 63V
J1 VDD48 46V-57V
J2 VSS
E1 VDD48
E11 VDD48
E2 VSS
E8 SD
JP3 LEGACY EN DIS
JP2 MIDSPAN EN DIS
JP1 ENFORCE CLASS EN DIS
E3 VSS
1630 McCarthy Blvd.
Milpitas, CA 95035
Phone: (408)432-1900
Fax: (408)434-0507
LTC Confidential-For Customer Use Only
LINEAR TECHNOLOGY
CONTRACT NO.
APPROVALS
DRAWN: KIM T.
CHECKED:
APPROVED:
ENGINEER: DILIAN R.
DESIGNER:
TITLE: SCHEMATIC
MAIN BOARD, SINGLE PORT AUTONOMOUS PSE
SIZE A
DWG NO. DC981A-2 * LTC4263CS/LTC4263CDE
REV A-2
DATE: Thursday, June 22, 2006
SHEET 1 OF 2
CUSTOMER NOTICE
LINEAR TECHNOLOGY HAS MADE A BEST EFFORT TO DESIGN A CIRCUIT THAT MEETS CUSTOMER-SUPPLIED SPECIFICATIONS; HOWEVER, IT REMAINS THE CUSTOMER'S RESPONSIBILITY TO VERIFY PROPER AND RELIABLE OPERATION IN THE ACTUAL APPLICATION. COMPONENT SUBSTITUTION AND PRINTED CIRUIT BOARD LAYOUT MAY SIGNIFICANTLY AFFECT CIRCUIT PERFORMANCE OR RELIABILITY. CONTACT LINEAR TECHNOLOGY APPLICATIONS ENGINEERING FOR ASSISTANCE.
THIS CIRCUIT IS PROPRIETARY TO LINEAR TECHNOLOGY AND SUPPLIED FOR USE WITH LINEAR TECHNOLOGY PARTS.
NOTES: UNLESS OTHERWISE SPECIFIED
1. ALL RESISTORS ARE IN OHMS, 0603.
ALL CAPACITORS ARE 0603.
2. INSTALL SHUNTS ON JP1-JP6 PIN 1 AND 2.

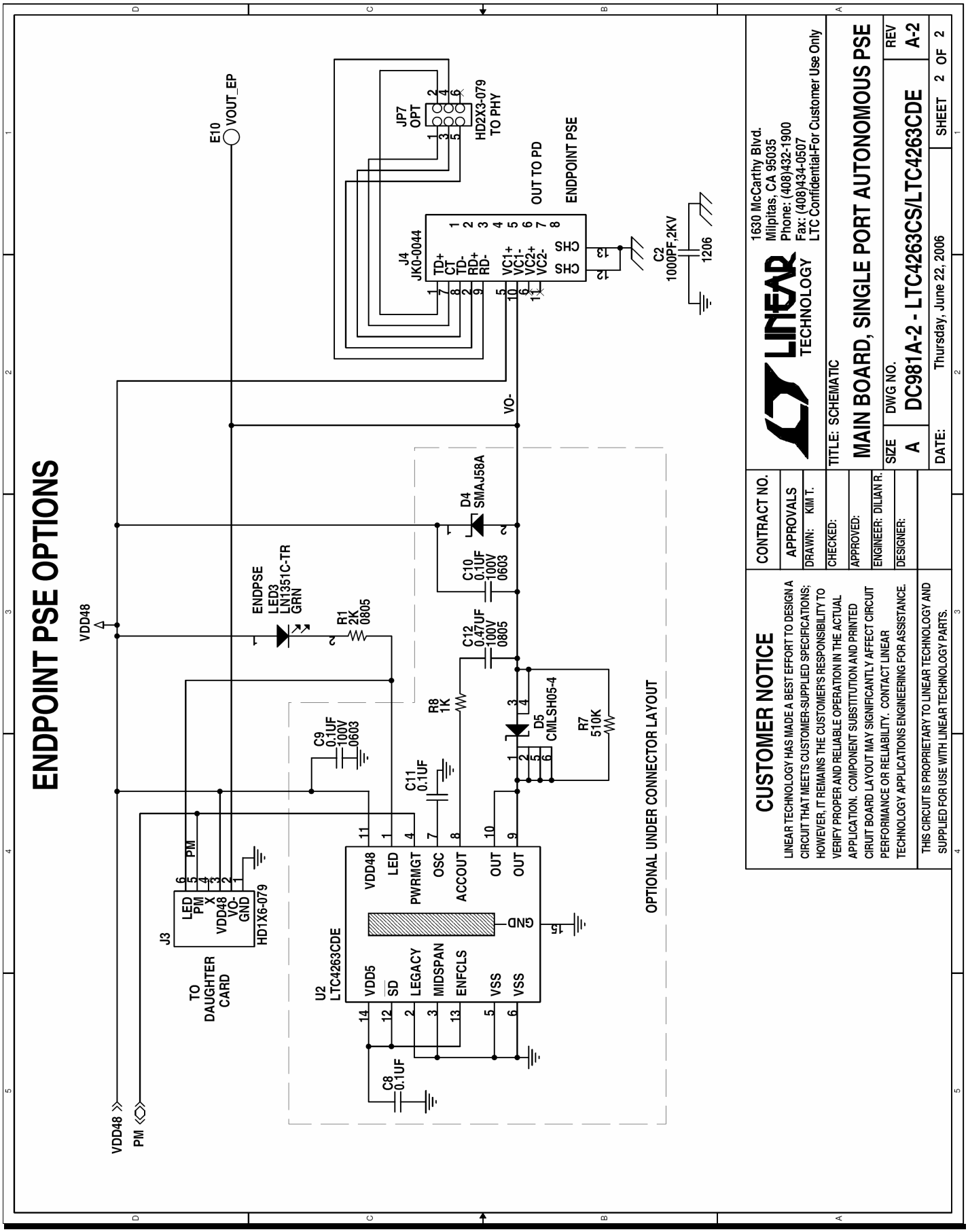
ENDPOINT PSE OPTIONS
E10
VOUT_EP
JP7
OPT
HD2X3-079
TO PHY
J4
JK0-0044
TD+
CT
TD-
RD+
RD-
VC1+
VC1-
VC2+
VC2-
CHS
CHS
OUT TO PD
ENDPOINT PSE
C2
1000PF,2KV
1206
VO-
D4
SMAJ58A
C10
0.1UF
100V
0603
C12
0.47UF
100V
0805
R8
1K
D5
CMLSH05-4
R7
510K
C11
0.1UF
C9
0.1UF
100V
0603
VDD48
ENDPSE
LED3
LN1351C-TR
GRN
R1
2K
0805
J3
LED
PM
X
VDD48
VO-
GND
HD1X6-079
TO
DAUGHTER
CARD
U2
LTC4263CDE
VDD48
LED
PWRMGT
OSC
ACCOUT
OUT
OUT
GND
VDD5
SD
LEGACY
MIDSPAN
ENFCLS
VSS
VSS
C8
0.1UF
OPTIONAL UNDER CONNECTOR LAYOUT
VDD48
PM
CUSTOMER NOTICE
LINEAR TECHNOLOGY HAS MADE A BEST EFFORT TO DESIGN A CIRCUIT THAT MEETS CUSTOMER-SUPPLIED SPECIFICATIONS; HOWEVER, IT REMAINS THE CUSTOMER'S RESPONSIBILITY TO VERIFY PROPER AND RELIABLE OPERATION IN THE ACTUAL APPLICATION. COMPONENT SUBSTITUTION AND PRINTED CIRUIT BOARD LAYOUT MAY SIGNIFICANTLY AFFECT CIRCUIT PERFORMANCE OR RELIABILITY. CONTACT LINEAR TECHNOLOGY APPLICATIONS ENGINEERING FOR ASSISTANCE.
THIS CIRCUIT IS PROPRIETARY TO LINEAR TECHNOLOGY AND SUPPLIED FOR USE WITH LINEAR TECHNOLOGY PARTS.
CONTRACT NO.
APPROVALS
DRAWN: KIM T.
CHECKED:
APPROVED:
ENGINEER: DILIAN R.
DESIGNER:
LINEAR TECHNOLOGY
1630 McCarthy Blvd.
Milpitas, CA 95035
Phone: (408)432-1900
Fax: (408)434-0507
LTC Confidential-For Customer Use Only
TITLE: SCHEMATIC
MAIN BOARD, SINGLE PORT AUTONOMOUS PSE
SIZE A
DWG NO. DC981A-2 - LTC4263CS/LTC4263CDE
REV A-2
DATE: Thursday, June 22, 2006
SHEET 2 OF 2

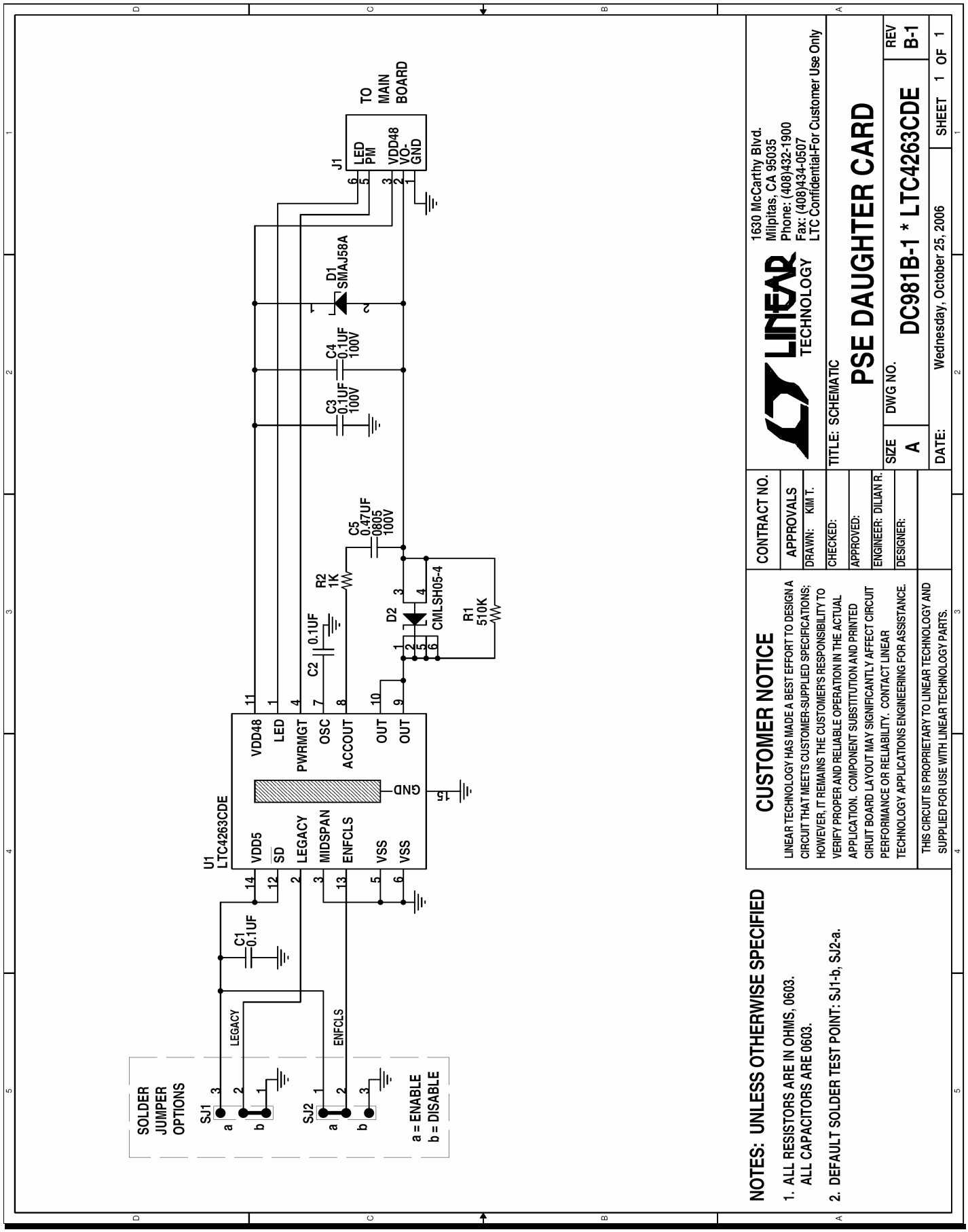
TO MAIN BOARD
J1
LED PM
VDD48 VO-GND
D1 SMAJ58A
C4 0.1UF 100V
C3 0.1UF 100V
C5 0.47UF 0805 100V
R2 1K
C2 0.1UF
D2 CMLSH05-4
R1 510K
U1 LTC4263CDE
VDD48
LED
PWRMGT
OSC
ACCOUT
OUT
OUT
GND
VDD5
SD
LEGACY
MIDSPAN
ENFCLS
VSS
VSS
C1 0.1UF
SOLDER JUMPER OPTIONS
SJ1
SJ2
LEGACY
ENFCLS
a = ENABLE
b = DISABLE
CUSTOMER NOTICE
LINEAR TECHNOLOGY HAS MADE A BEST EFFORT TO DESIGN A CIRCUIT THAT MEETS CUSTOMER-SUPPLIED SPECIFICATIONS; HOWEVER, IT REMAINS THE CUSTOMER'S RESPONSIBILITY TO VERIFY PROPER AND RELIABLE OPERATION IN THE ACTUAL APPLICATION. COMPONENT SUBSTITUTION AND PRINTED CIRUIT BOARD LAYOUT MAY SIGNIFICANTLY AFFECT CIRCUIT PERFORMANCE OR RELIABILITY. CONTACT LINEAR TECHNOLOGY APPLICATIONS ENGINEERING FOR ASSISTANCE.
THIS CIRCUIT IS PROPRIETARY TO LINEAR TECHNOLOGY AND SUPPLIED FOR USE WITH LINEAR TECHNOLOGY PARTS.
CONTRACT NO.
APPROVALS
DRAWN: KIM T.
CHECKED:
APPROVED:
ENGINEER: DILIAN R.
DESIGNER:
LINEAR TECHNOLOGY
1630 McCarthy Blvd.
Milpitas, CA 95035
Phone: (408)432-1900
Fax: (408)434-0507
LTC Confidential-For Customer Use Only
TITLE: SCHEMATIC
PSE DAUGHTER CARD
SIZE A
DWG NO. DC981B-1 * LTC4263CDE
REV B-1
DATE: Wednesday, October 25, 2006
SHEET 1 OF 1
NOTES: UNLESS OTHERWISE SPECIFIED
1. ALL RESISTORS ARE IN OHMS, 0603.
ALL CAPACITORS ARE 0603.
2. DEFAULT SOLDER TEST POINT: SJ1-b, SJ2-a.