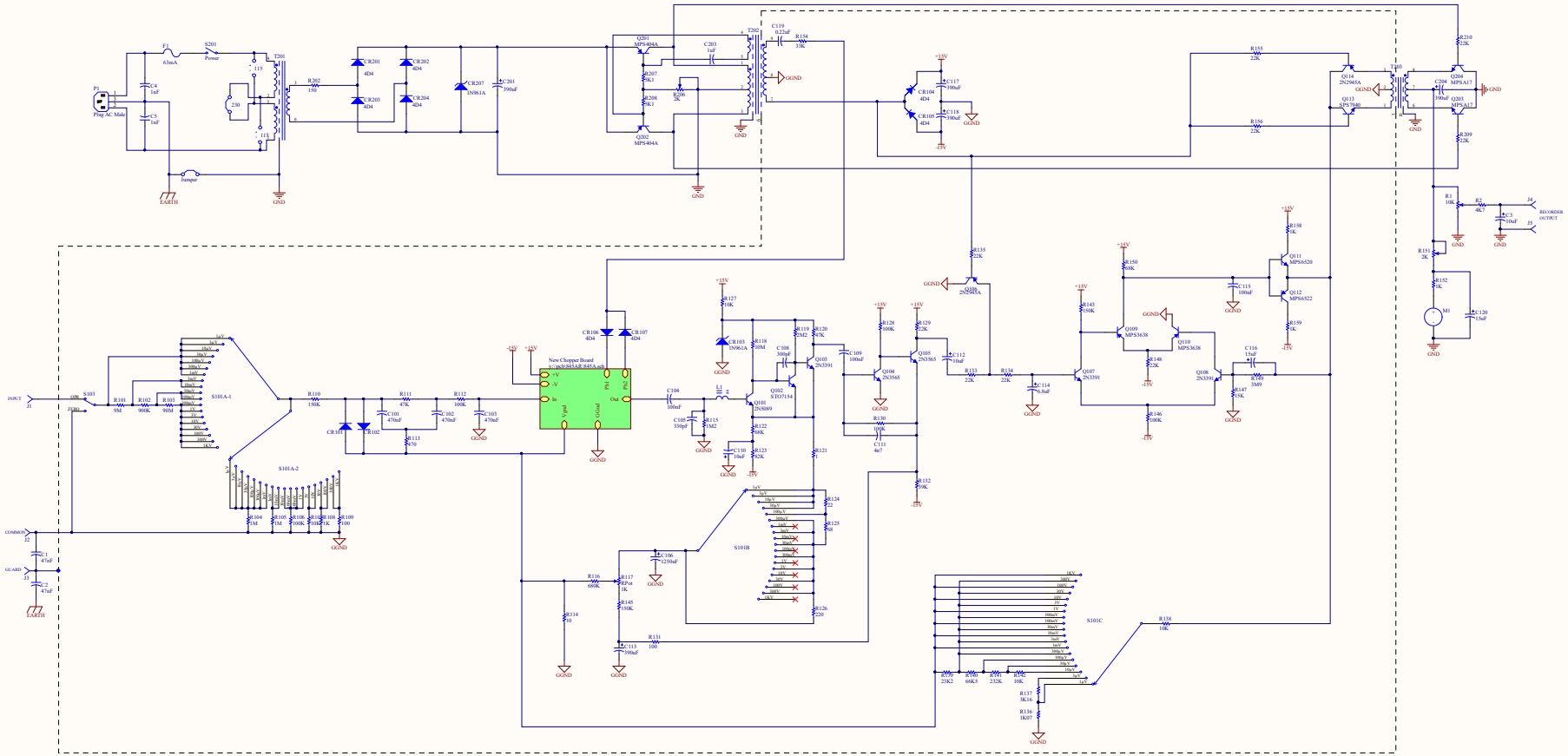

Title: **845AR**			
Size: A1	Number:	Revision:	
Date: 19/03/2016	Time: 21:37:38	Sheet 1 of 2	
File: C:\Instruments\FLUKE\845AR\845AR.sch			