OPERATING AND SERVICE MANUAL

-hp- 3456A

DIGITAL VOLTMETER

3456A

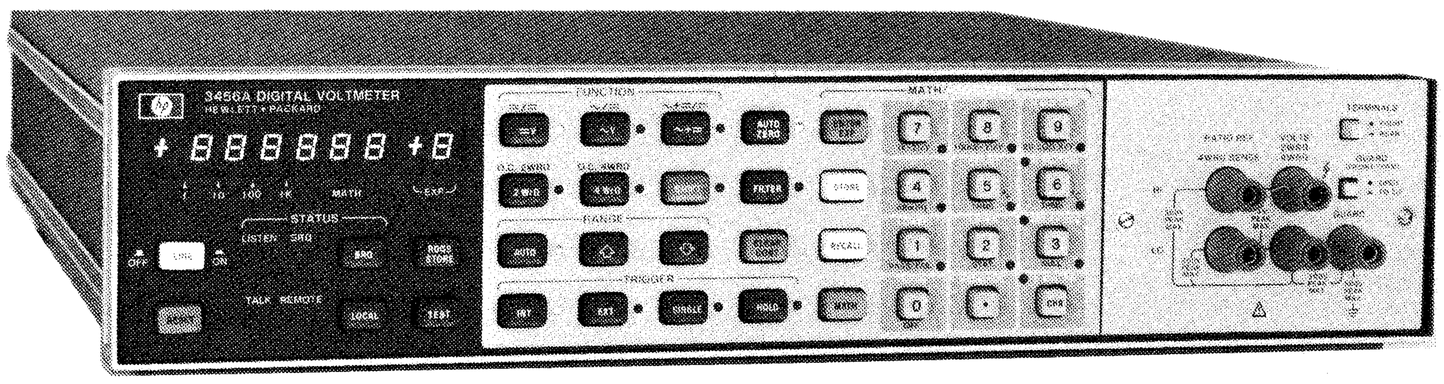

-hp- 3456A

HEWLETT PACKARD

FRONT COVER

HEWLETT PACKARD

OPERATING AND SERVICE MANUAL

MODEL 3456A
DIGITAL VOLTMETER

SERIAL NUMBERS

This manual applies directly to instruments with a serial number prefix of 2201.

Instruments with a prefix of 2015, and serial numbers 2015A04595 and below, refer to Section VII (Manual Changes) of this manual. For information on instruments with a prefix other than listed in Section VII and on the title page, refer to the manual change sheet.

IMPORTANT NOTICE

This Loose Leaf Manual does not normally require a change sheet. All major change information has been integrated into the manual by page revision. In cases where only minor changes are required, a change sheet may be supplied.

Where practical, backdating information is integrated into the text, parts list and schematic diagrams. Backdating changes are denoted by a delta sign. An open delta (Δ) or lettered delta (Δ_A) on a given page, refers to the corresponding backdating note on that page. Backdating changes not integrated into the manual are denoted by a numbered delta (Δ_1) which refers to the corresponding change in the Backdating Section (Section VII).

WARNING

To help minimize the possibility of electrical fire or shock hazards, do not expose this instrument to rain or excessive moisture.

Manual Part No. 03456-90004

Microfiche Part No. 03456-90054

Revision B

© Copyright Hewlett-Packard Company 1980
P.O. Box 301, Loveland, Colorado, 80537 U.S.A.

HEWLETT PACKARD

CERTIFICATION

Hewlett-Packard Company certifies that this product met its published specifications at the time of shipment from the factory. Hewlett-Packard further certifies that its calibration measurements are traceable to the United States National Bureau of Standards, to the extent allowed by the Bureau's calibration facility, and to the calibration facilities of other International Standards Organization members.

WARRANTY

This Hewlett-Packard product is warranted against defects in material and workmanship for a period of one year from date of shipment [,except that in the case of certain components listed in Section I of this manual, the warranty shall be for the specified period] . During the warranty period, Hewlett-Packard Company will, at its option, either repair or replace products which prove to be defective.

For warranty service or repair, this product must be returned to a service facility designated by -hp-. Buyer shall prepay shipping charges to -hp- and -hp- shall pay shipping charges to return the product to Buyer. However, Buyer shall pay all shipping charges, duties, and taxes for products returned to -hp- from another country.

Hewlett-Packard warrants that its software and firmware designated by -hp- for use with an instrument will execute its programming instructions when properly installed on that instrument. Hewlett-Packard does not warrant that the operation of the instrument, or software, or firmware will be uninterrupted or error free.

LIMITATION OF WARRANTY

The foregoing warranty shall not apply to defects resulting from improper or inadequate maintenance by Buyer, Buyer-supplied software or interfacing, unauthorized modification or misuse, operation outside of the environmental specifications for the product, or improper site preparation or maintenance.

NO OTHER WARRANTY IS EXPRESSED OR IMPLIED. HEWLETT-PACKARD SPECIFICALLY DISCLAIMS THE IMPLIED WARRANTIES OF MERCHANTABILITY AND FITNESS FOR A PARTICULAR PURPOSE.

EXCLUSIVE REMEDIES

THE REMEDIES PROVIDED HEREIN ARE BUYER'S SOLE AND EXCLUSIVE REMEDIES. HEWLETT-PACKARD SHALL NOT BE LIABLE FOR ANY DIRECT, INDIRECT, SPECIAL, INCIDENTAL, OR CONSEQUENTIAL DAMAGES, WHETHER BASED ON CONTRACT, TORT, OR ANY OTHER LEGAL THEORY.

ASSISTANCE

Product maintenance agreements and other customer assistance agreements are available for Hewlett-Packard products.

For any assistance, contact your nearest Hewlett-Packard Sales and Service Office. Addresses are provided at the back of this manual.

10/1/79

TABLE OF CONTENTS

Section Page

I. GENERAL INFORMATION 1-1
- 1-1. Introduction 1-1
- 1-5. Description 1-1
- 1-8. Specifications 1-1
- 1-11. Instrument and Manual Identification 1-1
- 1-14. Options 1-1
- 1-16. Accessories Supplied 1-1
- 1-18. Accessories Available 1-8
- 1-20. Safety Consideration 1-8
- 1-22. Recommended Test Equipment 1-8

Section Page

II. INSTALLATION 2-1
- 2-1. Introduction 2-1
- 2-3. Initial Inspection 2-1
- 2-5. Preparation for Use 2-1
- 2-6. Power Requirements 2-1
- 2-8. Line Voltage Selection 2-1
- 2-10. Power Cords and Receptacles 2-1
- 2-12. Grounding Requirements 2-1
- 2-14. Bench Use 2-1
- 2-16. Rack Mounting 2-2
- 2-18. Interface Connections 2-2
- 2-20. Address Selection 2-2
- 2-23. External Trigger 2-4
- 2-25. Voltmeter Complete Connector 2-4
- 2-27. Environmental Requirements 2-4
- 2-28. Operating and Storage Temperature 2-4
- 2-31. Humidity 2-4
- 2-33. Altitude 2-4
- 2-35. Repacking for Shipment 2-4

Section Page

III. OPERATION 3-1
- 3-1. Introduction 3-1
- 3-5. Pre-Operating Instructions 3-1
- 3-9. General Operating Characteristics 3-1
- 3-11. Turn-On and Warm-up 3-1
- 3-13. Reset 3-1
- 3-17. Self Test Operation 3-3
- 3-19. Display 3-4
- 3-21. Error Messages 3-4
- 3-23. Operating Characteristics 3-4
- 3-25. DC Voltage Measurement 3-4
- 3-28. AC Voltage Measurement 3-5
- 3-30. AC + DC Measurement 3-5
- 3-33. Resistance Measurement 3-5
- 3-37. Shift Operation 3-6
- 3-39. Ratio 3-6
- 3-41. Offset Compensated Ohms Measurement (O.C. Ohms) 3-7
- 3-44. Ranging 3-7
- 3-46. Instrument Trigger Modes 3-8
- 3-48. Autozero 3-8

Section Page

III. OPERATION (Cont'd)
- 3-50. Autozero Effects on 4-Wire Ohms Measurement 3-8
- 3-52. Analog Filter 3-9
- 3-54. Numbered Keyboard Operations 3-9
- 3-56. Storing Into Registers 3-9
- 3-61. Number of Power Line Cycles Integrated 3-11
- 3-63. Digits Displayed 3-11
- 3-65. Number of Readings per Trigger 3-11
- 3-67. Settling Delay 3-11
- 3-69. Optimizing the Reading Rate 3-11
- 3-71. Math Feature 3-11
- 3-71. %Error 3-14
- 3-78. Scale 3-14
- 3-81. Pass/Fail (Limit Test) 3-14
- 3-84. dB 3-15
- 3-87. dBm 3-15
- 3-90. Null 3-15
- 3-93. Thermistor 3-15
- 3-96. Statistics 3-16
- 3-101. Reading Storage 3-17
- 3-106. Voltmeter Complete 3-18
- 3-108. Guarding 3-18
- 3-109. General 3-18
- 3-111. Guarding Information 3-18
- 3-113. Front/Read Switch Lockout 3-18
- 3-115. Remote Operation 3-18
- 3-116. General 3-18
- 3-118. HP-IB Description (in Appendix A) 3-18
- 3-120. 3456A Response to Bus Message 3-18
- 3-122. Data 3-19
- 3-124. Trigger 3-19
- 3-126. Clear 3-19
- 3-128. Remote 3-19
- 3-130. Local 3-19
- 3-132. Local Lockout 3-19
- 3-134. Clear Lockout and Set Local 3-19
- 3-136. Require Service (SRQ) 3-19
- 3-140. Status Byte 3-20
- 3-144. Status Bit 3-21
- 3-146. Pass Control 3-21
- 3-148. Abort (Interface Clear) 3-21
- 3-150. 3456A Addressing 3-21
- 3-154. Talk-Only (No Controller) 3-22
- 3-156. 3456A HP-IB Programming 3-22
- 3-159. Algorithm 3-22
- 3-163. Programming the 3456A over the HP-IB 3-23
- 3-165. Program Codes (Data received by the 3456A) 3-23
- 3-167. Storing into Registers (Y, Z, Delay, etc.) over the HP-IB 3-23
- 3-169 Programming the SRQ Mask 3-25

TABLE OF CONTENTS (Cont'd)

Section Page

III. OPERATION (Cont'd)
- 3-172. 3456A's Measurement DATA (Data sent by the 3456A) 3-25
- 3-174. ASCII Format 3-25
- 3-178. Packed Format 3-25
- 3-184. Reading the 3456A's Output Data ... 3-26
- 3-186. Disabling the End or Identify (EOI) Statement 3-26
- 3-188. System Output Mode 3-26
- 3-191. Home Command 3-26
- 3-193. Front/Rear Switch Position 3-27
- 3-195. Complete Program Example 3-27
- 3-198. Front Panel SRQ 3-27
- 3-200. Instrument Program Memory Operation 3-28
- 3-206. Data Ready 3-29/3-30
- 3-208. 3456A's Numeric Entry Format and other Input Considerations 3-29/3-30
- 3-211. Operator's Check 3-29/3-30

Section Page

IV. PERFORMANCE TEST 4-1
- 4-1. Introduction 4-1
- 4-4. Equipment Required 4-1
- 4-6. DCV Test 4-1
- 4-8. Ohms Test 4-1
- 4-10. ACV Test 4-2
- 4-13. Test Cards 4-2
- 4-15. Calibration Cycle 4-2
- 4-17. Test Failure 4-2
- 4-19. Instrument Set-Up 4-2
- 4-22. Specification Breakdown 4-4
- 4-25. Test Consideration 4-4
- 4-26. General 4-4
- 4-28. Ambiguous Region 4-4
- 4-31. Performance Test 4-5
- 4-33. DCV Test 4-5
- 4-37. Ohms Test 4-8
- 4-41. ACV Test 4-9
- 4-45. Alternate 250 kHz ACV Test 4-10

Section Page

V. ADJUSTMENTS 5-1
- 5-1. Introduction 5-1
- 5-3. Equipment Required 5-1
- 5-5. Adjustment Interval 5-1
- 5-7. Adjustment Sequence 5-1
- 5-9. Adjustment Location 5-2
- 5-11. DCV Adjustment 5-2
- 5-15. Ohms Adjustment 5-4
- 5-18. ACV Adjustment 5-4
- 5-21. Combined Performance Test and Adjustments 5-5
- 5-23. DCV Test and Adjustments 5-5
- 5-27. Ohms Test and Adjustment 5-7
- 5-31. ACV Test and Adjustments 5-31

Section Page

VI. REPLACEABLE PARTS 6-1
- 6-1. Introduction 6-1
- 6-4. Ordering Information 6-1
- 6-6. Non-Listed Parts 6-1
- 6-8. Parts Changes 6-1
- 6-10. Proprietary Parts 6-1
- 6-12. Exchange Assemblies 6-2
- 6-15. Service Kits 6-2

Section Page

VII. MANUAL CHANGES 7-1/7-2
- 7-1. Introduction 7-1
- 7-3. Manual Changes 7-1
- 7-6. Manual Change Instructions 7-1
- 7-7. Change #1 7-1
- 7-9. Change #2 7-1
- 7-11. Change #3 7-1
- 7-13. Change #4 7-2
- 7-15. Change #5 7-4
- 7-17. Change #6 7-5
- 7-19. Change #7 7-5
- 7-21. Change #8 7-5
- 7-23. Change #9 7-5
- 7-25. Change #10 7-7
- 7-27. Change #11 7-12

Section Page

VIII. SERVICE 8-1
- 8-1. Introduction 8-1
- 8-3. Safety Considerations 8-1
- 8-8. Recommended Test Equipment 8-1
- 8-10. Theory of Operation 8-1
- 8-11. Introduction 8-1
- 8-14. Outguard Section 8-1
- 8-19. Inguard Section 8-1
- 8-23. Front/Rear Switch 8-3
- 8-25. Input Protection 8-3
- 8-28. DC Volts Measurement 8-3
- 8-40. Input Amplifier 8-6
- 8-48. Analog-To-Digital (A/D) Converter 8-9
- 8-49. General 8-9
- 8-54. Runup 8-10
- 8-70. Rundown 8-12
- 8-83. A/D Converter Circuit Description 8-14
- 8-101. 12 Volt Reference 8-16
- 8-102. General 8-16
- 8-106. Circuit Description 8-16
- 8-112. Ohms Measurements 8-17
- 8-113. General 8-17
- 8-116. Circuit Description 8-17
- 8-138. AC Volts Measurements 8-26
- 8-139. General 8-26
- 8-142. Input Attenuator and Amplifier 8-26
- 8-171. Ratio Measurements 8-29

TABLE OF CONTENTS (Cont'd)

Section — Page

VIII. SERVICE (Cont'd)

8-176. Inguard Logic (A30 Board) 8-31
8-177. General 8-31
8-181. Isolation Logic 8-31
8-191. Range and Function Control 8-35
8-224. Outguard Section (A3 and A4 Boards) 8-43
8-225. General 8-43
8-231. Main Controller Circuits (A4 Boards) 8-43
8-256. Isolation Logic (A3 Board) 8-48
8-264. Keyboard Scan Logic 8-49
8-272. Display and Annunciator Drive 8-50
8-280. Keyboard Display, and Annunciator Circuits 8-50
8-285. HP-IB 8-51
8-296. Power Supplies 8-53
8-309. Troubleshooting 8-55
8-310. Introduction 8-55
8-313. Board Removal and Installation 8-55
8-317. Service Group Summary 8-57

Section — Page

VIII. SERVICE (Cont'd)

8-324. Component Reference Designator 8-57
8-327. Selecting the Self-Test 8-58
8-334. Self-Test Troubleshooting 8-59

SERVICE GROUPS

Service Group A 8-A-0
Service Group B 8-B-0
Service Group C 8-C-0
Service Group D 8-D-0
Service Group E 8-E-0
Service Group F 8-F-0

APPENDICES

Appendix A
Appendix B
Appendix C
Appendix D

LIST OF TABLES

Table — Page

1-1. Specifications 1-2
1-2. Recommended Test Equipment 1-8
3-1. Error Messages 3-4
3-2. Registers and Math Listing 3-10
3-3. Default Delays 3-11
3-4. Optimizing Reading Rate 3-12
3-5. Interface Functions 3-18
3-6. 3456A Clear, Home and Reset Difference 3-19
3-7. Status Byte Definition 3-20
3-8. 3456A Address Codes 3-22
3-9. 3456A Program Codes 3-24
4-1. Recommended Test Equipment 4-3
4-2. DCV Test Limits 4-5
4-3. Ohms Test Limits 4-8
4-4. ACV Test Limits 4-10
5-1. 3456A Adjustments 5-1
5-2. DCV Test and Adjustment Limits 5-5
5-3. Ohms Test and Adjustment Limits 5-8
5-4. ACV Test and Adjustment Limits 5-9
6-1. Standard Abbreviations 6-1
6-2. Code List of Manufacturers 6-2
6-3. Exchange Assemblies 6-2
6-4. Replaceable Parts 6-3
7-1. Manual Changes 7-1
7-2. Data Bus (D0-D7) Signatures 7-6
7-3. Individual ROM Signatures 7-6
8-1. A20 Board Component Numbering Structure 8-4
8-2. Comparator Operation 8-4
8-3. Input Amplifier Gains 8-9
8-4. Runup Integration Time Periods 8-10
8-5. Readout Digit Generation During Runup 8-12

Table — Page

8-6. Slope Generation 8-14
8-7. Ohms Current Source 8-18
8-8. AC Converter Stage Gains 8-29
8-9. Range Decoding U701 8-36
8-10. Gain Decoding U701 8-36
8-11. A30 Board Jumpers and Plugs/Jacks 8-40
8-12. 3456A Service Group Listing 8-55
8-13. Component Numbering 8-57
8-14. 3456A Self-Test Limits 8-58
8-A-1. Data Bus (D0-D7) Signatures 8-A-3
8-A-2. Address Bus (A0-A15) Signatures 8-A-3
8-A-3. Rom Select (A4U6) Signatures 8-A-3
8-A-4. Individual ROM Signatures 8-A-3
8-A-5. Strobe Signatures 8-A-5
8-A-6. Rom Select Signatures 8-A-5
8-B-1. A/D Converter Signatures 8-B-8
8-B-2. A/D Slope Configuration 8-B-9
8-B-3. Static State of the A/D Digital Circuitry 8-B-9
8-C-1. Inguard Switch Closure Commands 8-C-2
8-D-1. Ohms Gain and Currents 8-D-1
8-D-2. Ohms Switch Closure Commands 8-D-2
8-D-3. Range Failures and Defective FETs 8-D-7
8-E-1. ACV Switch Closure Commands 8-E-1
8-F-1. Inguard Power Supply Locations 8-F-1
8-F-2. Power Supplies Levels 8-F-2
8-F-3. Power Supplies Jumpers and Location 8-F-2

LIST OF ILLUSTRATIONS

Figure		Page
2-1.	Line Voltage Selection	2-1
2-2.	Power Cables	2-2
2-3.	Typical HP-IB System Interconnections	2-3
2-4.	HP-IB Connector	2-3
2-5.	3456A Address Switch	2-4
3-1.	Front and Rear Panel Features	3-2
3-2.	Front Panel Display Area	3-3
3-3.	3456A Display	3-4
3-4.	Front Panel Voltmeter Configuration Area	3-4
3-5.	Ohms Connection	3-5
3-6.	Ratio Connection	3-6
3-7.	Typical Ratio Measurement	3-7
3-8.	Front Panel Numbered Keyboard Area	3-9
3-9.	Guard Connections	3-19
3-10.	Status Byte	3-21
4-1.	Ambiguous Regions	4-4
4-2.	DCV Accuracy Test Set-Up	4-6
4-3.	Schematic of the DCV Accuracy Test Set-Up	4-6
4-4.	Ratio Test Connection	4-7
4-5.	DC Common Mode Rejection Test	4-8
4-6.	4-Wire Ohms Short	4-9
4-7.	Ohms Test	4-9
5-1.	3456A Adjustment Location	5-2
5-2.	DCV Test Equipment Connection	5-3
5-3.	DCV Test Equipment Connection	5-3
5-4.	Standard Resistor Connection	5-4
5-5.	Ratio Test Connection	5-7
5-6.	DC Common Mode Rejection Test	5-8
5-7.	4-Wire Ohms Short	5-8
6-1.	Chassis/Cabinet Parts	6-20
6-2.	A20 Board Miscellaneous Fastener Parts	6-21
6-3.	Top View of Chassis with PC Boards Removed	6-22
6-4.	Bottom View of Chassis with PC Boards Installed	6-23
6-5.	Bottom View of Chassis with PC Boards Removed	6-24
6-6.	Side Views of Chassis	6-25
6-7.	Front Assembly (Inside View)	6-26
6-8.	Inguard Chassis— Front and Rear Panel	6-27
6-9.	Inside View of Front Terminal Assembly, Guard Switch, and Front/Rear Switch	6-28
6-10.	Inside View of Rear Terminal Assembly and AC Power Switch	6-29
6-11.	Power Transformer and Bracket; Voltage Regulator, Zener Diode, and Bracket	6-30
7-1.	Change #1 on Schematic 9	7-2
7-2.	Change #3 on Schematic 8	7-2
7-3.	Change #3 on Schematic 9	7-3
7-4.	Change #5 on Schematic 7	7-4
7-5.	Change #8 on Schematic 7	7-5
7-6.	Change #10 in Figure 3-1	7-8
7-7.	Change #10 on Schematic 14	7-8
7-8.	Change #10 in Figure 6-3	7-9
7-9.	Change #10 in Figure 6-8	7-10
7-10.	Change #10 in Figure 8-11	7-11
8-1.	Simplified Block Diagram	8-2
8-2.	Simplified Front/Rear Switch Circuit	8-3
8-3.	High Voltage Protection Circuits	8-3
8-4.	Range and Function Control Switching	8-4
8-5.	Comparator/Fet-Switch Circuit	8-5
8-6.	Analog Filter	8-5
8-7.	Simplified Schematic for Input Amplifier	8-6
8-8.	Simplified Schematic for Input Switching	8-7
8-9.	Dual-Slope Conversion	8-9
8-10.	Runup Slope for Zero Volts Input (.1 PLC)	8-10
8-11.	Simplified Zero-Crossing Circuit (A/D Converter)	8-10
8-12.	Runup Slope Sequence for Full-Scale Input (10 V) and 50% Full-Scale (5 V)(.1 PLC)	8-11
8-13.	Simplified Schematic of S+4 Slope Generation Circuit	8-11
8-14.	Simplified Schematic of S−4 Slope Generation Circuit	8-11
8-15.	Slope Generation when Input Signal Voltage and Slope Voltage are Added	8-12
8-16.	Runup Timing Diagram for .1 PLC	8-12
8-17.	Runup Timing Diagram for 1 PLC	8-12
8-18.	Multi-Slope II Rundown	8-13
8-19.	Rundown Timing Chart	8-13
8-20.	S+4 and S−4 Rundown Slopes	8-13
8-21.	Rundown Slopes	8-13
8-22.	A/D Converter Waveform for −5V Input, Autozero Disabled	8-14
8-23.	A/D Converter Waveform for −5V Input, Autozero Enabled	8-14
8-24.	A/D Converter Waveform for −10V Input, Autozero Enabled	8-14
8-25.	S601 Data	8-17
8-26.	Simplified A/D Converter Schematic	8-19
8-27.	Simplified Reference Schematic	8-21
8-28.	Simplified Ohm's Current Source Schematic	8-23
8-29.	Level Shift for Low Ohms Offset Circuit	8-25
8-30.	Low Ohms Offset, Circuit Operation	8-26
8-31.	Low Ohms Offset Level Shift	8-26
8-32.	FET Switches and Feedback Path for AC Volt Measurement, 1 V Range	8-27
8-33.	AC Converter, Output Signal Path	8-29
8-34.	Simplified Schematic for AC Volts Measurements	8-29
8-35.	Ratio Measurement, Reference High	8-30

LIST OF ILLUSTRATIONS (Cont'd)

Figure		Page
8-36.	Ratio Measurement, Reference Low	8-30
8-37.	Simplified Block Diagram, Inguard Logic	8-31
8-38.	Isolation Logic Data and Clock (at Receiver) with Internal Self-Test #3 Enabled	8-32
8-39.	Isolation Logic, Receiver	8-33
8-40.	Isolation Logic, Transmitter	8-35
8-41.	ALE and ALE Synchronizer	8-36
8-42.	Slope Sequence During Rundown	8-37
8-43.	Rundown Timing Chart	8-39
8-44.	FRAC Circuits	8-41
8-45.	Simplified Block Diagram	8-42
8-46.	Address Bus Structure	8-44
8-47.	DBE Stretcher, Timing Diagram	8-45
8-48.	Write Going to Read Stretcher, Timing Diagram	8-45
8-49.	True VMA Generator, Timing Diagram	8-45
8-50.	Speed Compensating Circuits	8-45
8-51.	ROM Select Decoder U6	8-47
8-52.	Decoders U17 and U19	8-47
8-53.	4 x 5 Switch Matrix (S18 Closed)	8-49
8-54.	4 x 10 Switch Matrix on A2 Board	8-49
8-55.	Internal Circuit Diagram for A2DS2-DS7 and DS9	8-51
8-56.	Internal Circuit Diagram for A2DS1 and DS8	8-51
8-57.	Quad Bidirectional Transceiver (HP-IB), Pin Configuration and Truth Table (HP-IB)	8-52
8-58.	Inguard Grounding Structure	8-55/8-56
8-59.	Mnemonic Definitions and General Schematic Notes	8-61
8-60.	Detailed Block Diagram	8-63
8-61.	Input Switching Schematic (A20)	8-65
8-62.	Ohm's Current Source Schematic (A20)	8-67
8-63.	Input Amplifier Schematic (A20)	8-69
8-64.	A/D Converter Schematic (A20)	8-71
8-65.	A24 Reference Schematic (A20)	8-73
8-66.	A25 Reference Schematic (A20)	8-75
8-67.	Range and Function Control Logic (A20)	8-77
8-68.	AC Converter Schematic (A40)	8-79
8-69.	Inguard Logic Schematic (A30)	8-81
8-70.	Main Controller (Outguard) Schematic (A4)	8-83
8-71.	Keyboard Scan Logic, Display and Annunciator Drive Schematic (A4)	8-85
8-72.	Keyboard, Display and Annunciators Schematic (A2)	8-87
8-73.	Isolation Logic Schematic (A3)	8-89
8-74.	HP-IB Logic Schematic (A3)	8-91
8-75.	Power Supply Schematic (A10/A3)	8-93
8-A-1.	Flowchart A	8-A-3
8-A-2.	Flowchart B	8-A-5
8-A-3.	Flowchart C	8-A-7
8-A-4.	Flowchart D	8-A-9
8-A-5.	Flowchart E	8-A-11
8-A-6.	Flowchart F	8-A-13
8-A-7.	Transmitter Output	8-A-17
8-A-8.	Output of U19	8-A-18
8-A-9.	Input to U19	8-A-19
8-A-10.	Receiver Inputs	8-A-19
8-A-11.	Output of T2	8-A-19
8-A-12.	Receiver Data	8-A-20
8-A-13.	Figure Receive Clock	8-A-20
8-A-14.	High Level Data	8-A-20
8-A-15.	Low Level Data	8-A-20
8-B-1.	Test Jumper A20J29 in Ground Position	8-B-1
8-B-2.	Jumper A30J33/34 in the 2 Position	8-B-3
8-B-3.	A/D Zero Waveform	8-B-4
8-B-4.	Inguard Signature Analysis Routines	8-B-11
8-B-5.	Isolation Logic Input	8-B-11
8-B-6.	Signal at A30TP1 and TP2	8-B-13
8-B-7.	Output of A30U24	8-B-13
8-B-8.	Output of Inguard Isolation Logic	8-B-14
8-B-9.	Output of A30U19	8-B-14
8-B-10.	Output of Shift Register	8-B-14
8-B-11.	ALE Clock Signal	8-B-14
8-B-12.	Isolation Logic Clock Signal	8-B-14
8-E-1.	RMS Converter Waveforms	8-E-4
8-F-1.	Reference Jumpers	8-F-3

HEWLETT PACKARD

SAFETY SUMMARY

The following general safety precautions must be observed during all phases of operation, service, and repair of this instrument. Failure to comply with these precautions or with specific warnings elsewhere in this manual violates safety standards of design, manufacture, and intended use of the instrument. Hewlett-Packard Company assumes no liability for the customer's failure to comply with these requirements. This is a Safety Class 1 instrument.

GROUND THE INSTRUMENT

To minimize shock hazard, the instrument chassis and cabinet must be connected to an electrical ground. The instrument is equipped with a three-conductor ac power cable. The power cable must either be plugged into an approved three-contact electrical outlet or used with a three-contact to two-contact adapter with the grounding wire (green) firmly connected to an electrical ground (safety ground) at the power outlet. The power jack and mating plug of the power cable meet International Electrotechnical Commission (IEC) safety standards.

DO NOT OPERATE IN AN EXPLOSIVE ATMOSPHERE

Do not operate the instrument in the presence of flammable gases or fumes. Operation of any electrical instrument in such an environment constitutes a definite safety hazard.

KEEP AWAY FROM LIVE CIRCUITS

Operating personnel must not remove instrument covers. Component replacement and internal adjustments must be made by qualified maintenance personnel. Do not replace components with power cable connected. Under certain conditions, dangerous voltages may exist even with the power cable removed. To avoid injuries, always disconnect power and discharge circuits before touching them.

DO NOT SERVICE OR ADJUST ALONE

Do not attempt internal service or adjustment unless another person, capable of rendering first aid and resuscitation, is present.

DO NOT SUBSTITUTE PARTS OR MODIFY INSTRUMENT

Because of the danger of introducing additional hazards, do not install substitute parts or perform any unauthorized modification to the instrument. Return the instrument to a Hewlett-Packard Sales and Service Office for service and repair to ensure that safety features are maintained.

DANGEROUS PROCEDURE WARNINGS

Warnings, such as the example below, precede potentially dangerous procedures throughout this manual. Instructions contained in the warnings must be followed.

WARNING

Dangerous voltages, capable of causing death, are present in this instrument. Use extreme caution when handling, testing, and adjusting.

A

SAFETY SYMBOLS

General Definitions of Safety Symbols Used On Equipment or In Manuals.

Instruction manual symbol: the product will be marked with this symbol when it is necessary for the user to refer to the instruction manual in order to protect against damage to the instrument.

Indicates dangerous voltage (terminals fed from the interior by voltage exceeding 1000 volts must be so marked).

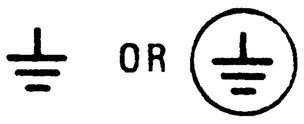

Protective conductor terminal. For protection against electrical shock in case of a fault. Used with field wiring terminals to indicate the terminal which must be connected to ground before operating equipment.

Low-noise or noiseless, clean ground (earth) terminal. Used for a signal common, as well as providing protection against electrical shock in case of a fault. A terminal marked with this symbol must be connected to ground in the manner described in the installation (operating) manual, and before operating the equipment.

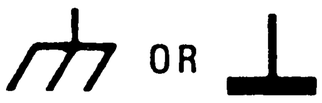

Frame or chassis terminal. A connection to the frame (chassis) of the equipment which normally includes all exposed metal structures.

Alternating current (power line).

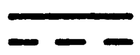

Direct current (power line).

Alternating or direct current (power line).

WARNING

The WARNING sign denotes a hazard. It calls attention to a procedure, practice, condition or the like, which, if not correctly performed or adhered to, could result in injury or death to personnel.

CAUTION

The CAUTION sign denotes a hazard. It calls attention to an operating procedure, practice, condition or the like, which,if not correctly performed or adhered to, could result in damage to or destruction of part or all of the product.

NOTE:

The NOTE sign denotes important information. It calls attention to procedure, practice, condition or the like, which is essential to highlight.

PERFORMANCE TEST RECORD

24 HOUR LIMITS

HEWLETT—PACKARD MODEL 3456A

DIGITAL VOLTMETER

SERIAL NO. _____

Test Performed By _____

Date _____

DCV Test Temperature = 23°C ± 1°C

Step #	Input to 3456A	Set-Up and Configuration	High Limit	Reading	Low Limit	Test Pass	Test Fail
1	Open	Self-Test	- - -	- - -	- - -	_____	_____
2	Open	Press RESET	- - -	- - -	- - -	- - -	- - -
3	Open	Set to 6 dig. resolution	- - -	- - -	- - -	- - -	- - -
4	Short	.1 V Range	+00.0024 -3	_____	-00.0024 -3	_____	_____
5	Short	1 V Range	+.000004	_____	-.000004	_____	_____
6	Short	10 V Range	+0.00002	_____	-0.00002	_____	_____
7	Short	100 V Range	+00.0003	_____	-00.0003	_____	_____
8	Short	1 kV Range	+000.002	_____	-000.002	_____	_____
9	+10 V DC	Autorange	+10.00010	_____	+9.99990	_____	_____
10	+1 V DC	Autorange	+1.000013	_____	+.999987	_____	_____
11	+.1 V DC	Autorange	+100.0046 -3	_____	+99.9954	_____	_____
12	+100 V DC	Autorange	+100.0014	_____	+99.9986	_____	_____
13	+1000 V DC	Autorange	+1000.133	_____	+999.867	_____	_____
14	-1 V DC	10 V Range	-1.00003	_____	-.99997	_____	_____
15	-5 V DC	10 V Range	-5.00006	_____	-4.99994	_____	_____
16	-10 V DC	10 V Range	-10.00010	_____	-9.99990	_____	_____
17	-10 V DC	Int. = 100	-10.00010	_____	-9.99990	_____	_____
18	-10 V DC	Int. = 1	-10.00014	_____	-9.99986	_____	_____
19	-10 V DC	Int. = .1	-10.0009	_____	-9.9991	_____	_____
20	-10 V DC	Int. = .01	-10.008	_____	-9.992	_____	_____
21	-10 V DC	Int. = 10, Filter On	-10.00010	_____	-9.99990	_____	_____
22	-10 V DC	Filter Off, Autozero Off	-10.00011	_____	-9.99989	_____	_____
23	Open	Press RESET	- - -	- - -	- - -	- - -	- - -
24	10 V DC to REF H to V H and REF L to V L	DCV/DCV Ratio	1.00002	_____	.99998	_____	_____
25	10 V DC to REF H to V H and REF L to V L	ACV+DCV/DCV Ratio	1.00111	_____	.99889	_____	_____
26	See Below	CMR Test	- - -	- - -	- - -	- - -	- - -

CMR Test

1. Connect a 1 K ohm resistor between the HIGH and LOW VOLTS terminal and connect GUARD to VOLTS HIGH.
2. Take a reading.
3. Apply 100 V dc between the 3456A's chassis and VOLTS HIGH terminal.
4. The 3456A reading should be within .00001 V of reading in Step 2.

NOTE

Do the tests in the order they are given since, for example, the Reset will set-up the 3456A to a certain configuration (5 digit mode, etc.).

PERFORMANCE TEST RECORD

24 HOUR LIMITS

HEWLETT—PACKARD MODEL 3456A

DIGITAL VOLTMETER

SERIAL NO. _____

Test Performed By _____

Date _____

Ohms Test Temperature = 23°C ± 1°C

Step #	Input to 3456A	Set-Up and Configuration	High Limit	Reading	Low Limit	Test Pass	Test Fail
1	Open	Press RESET	- - -	- - -	- - -	- - -	- - -
3	Open	Set to 6 dig. resolution	- - -	- - -	- - -	- - -	- - -
4	4-Wire Short	2-Wire Ohms	00.2024	_____	-00.0024	_____	_____
5	4-Wire Short	4-Wire Ohms	00.0024	_____	-00.0024	_____	_____
6	10 kΩ	Autorange	10.00024 + 3	_____	9.99976 + 3	_____	_____
7	1 kΩ	Autorange	1000.024	_____	999.976	_____	_____
8	100 Ω	Autorange	100.0054	_____	99.9946	_____	_____
9	100 kΩ	Autorange	100.0022 + 3	_____	99.9978 + 3	_____	_____
10	1 MΩ	Autorange	1000.062 + 3	_____	999.938 + 3	_____	_____
11	10 MΩ	Autorange	10.00412 + 6	_____	9.99588 + 6	_____	_____
12	1 GΩ	Autorange	1110.001 + 6	_____	889.999 + 6	_____	_____
13	1 MΩ	2-Wire Ohms	1000.062 + 3	_____	999.938 + 3	_____	_____
14	10 kΩ	4-Wire Ohms 100 K Range	10.0004 + 3	_____	9.9996 + 3	_____	_____
15	10 kΩ	Autozero Off	10.0006 + 3	_____	9.9994 + 3	_____	_____
16	100 kΩ	Autozero On 2-Wire O.C.	100.0024 + 3	_____	99.9976 + 3	_____	_____
17	100 kΩ	4-Wire O.C.	100.0022 + 3	_____	99.9978 + 3	_____	_____

PERFORMANCE TEST RECORD

24 HOUR LIMITS

HEWLETT—PACKARD MODEL 3456A

DIGITAL VOLTMETER

SERIAL NO. _____

Test Performed By _____

Date _____

ACV Test Temperature = 23°C ± 1°C

Step #	Input to 3456A	Set-Up and Configuration	High Limit	Reading	Low Limit	Test Pass	Test Fail
1	Open	Press RESET	- - -	- - -	- - -	- - -	- - -
2	.01 V DC	ACV + DCV	.01057	_____	.00943	_____	_____
3	.01 V, 1 kHz	ACV	.01056	_____	.00944	_____	_____
4	0.1 V, 1 kHz	ACV	.10060	_____	.09940	_____	_____
5	0.5 V, 1 kHz	ACV	.50080	_____	.49920	_____	_____
6	1.0 V, 1 kHz	ACV	1.00105	_____	.99895	_____	_____
7	10 V, 1 kHz	ACV	10.0105	_____	9.9895	_____	_____
8	100 V, 1 kHz	ACV	100.105	_____	99.895	_____	_____
9	700 V, 1 kHz	ACV	701.39	_____	698.61	_____	_____
10	.01 V, 100 kHz	ACV	.01275	_____	.00725	_____	_____
11	1.0 V, 100 kHz	ACV	1.00800	_____	.99200	_____	_____
12	10 V, 100 kHz	ACV	10.0800	_____	9.9200	_____	_____
13	100 V, 100 kHz	ACV	100.800	_____	99.200	_____	_____
14	700 V, 100 kHz	ACV	706.90	_____	693.10	_____	_____
15	1.0 V, 250 kHz	ACV	1.05630	_____	.94370	_____	_____
16	10 V, 250 kHz	ACV	10.5630	_____	9.4370	_____	_____
17	1.0 V, 20 Hz	Filter On	1.00360	_____	.99640	_____	_____
18	1.0 V, 20 Hz	ACV + DCV	1.00360	_____	.99640	_____	_____

PERFORMANCE TEST RECORD

90 DAY LIMITS

HEWLETT—PACKARD MODEL 3456A

DIGITAL VOLTMETER

SERIAL NO. _____

Test Performed By _____

Date _____

DCV Test Temperature = 23°C ± 1°C

Step #	Input to 3456A	Set-Up and Configuration	High Limit	Reading	Low Limit	Test Pass	Test Fail
1	Open	Self Test	- - -	- - -	- - -	- - -	- - -
2	Open	Press RESET	- - -	- - -	- - -	- - -	- - -
3	Open	Set to 6 dig. resolution	- - -	- - -	- - -	- - -	- - -
4	Short	.1 V Range	+00.0024 -3	_____	-00.0024 -3	_____	_____
5	Short	1 V Range	+.000004	_____	-.000004	_____	_____
6	Short	10 V Range	+0.00002	_____	-0.00002	_____	_____
7	Short	100 V Range	+00.0003	_____	-00.0003	_____	_____
8	Short	1 kV Range	+000.002	_____	-000.002	_____	_____
9	+10 V DC	Autorange	+10.00025	_____	+9.99975	_____	_____
10	+1 V DC	Autorange	+1.000028	_____	+.999972	_____	_____
11	+.1 V DC	Autorange	+100.0058 -3	_____	+99.942 -3	_____	_____
12	+100 V DC	Autorange	+100.0029	_____	+99.9971	_____	_____
13	+1000 V DC	Autorange	+1000.146	_____	+999.874	_____	_____
14	-1 V DC	10 V Range	-1.00004	_____	-.99996	_____	_____
15	-5 V DC	10 V Range	-5.00014	_____	-4.99986	_____	_____
16	-10 V DC	10 V Range	-10.00025	_____	-9.99975	_____	_____
17	-10 V DC	Int. = 100	-10.00025	_____	-9.99975	_____	_____
18	-10 V DC	Int. = 1	-10.00027	_____	-9.99973	_____	_____
19	-10 V DC	Int. = .1	-10.0009	_____	-9.9991	_____	_____
20	-10 V DC	Int. = .01	-10.008	_____	-9.992	_____	_____
21	-10 V DC	Int. = 10, Filter On	-10.00025	_____	-9.99975	_____	_____
22	-10 V DC	Filter Off, Autozero Off	-10.00026	_____	-9.99974	_____	_____
23	Open	Press RESET	- - -	- - -	- - -	- - -	- - -
24	10 V DC to REF H to V H and REF L to V L	DCV/DCV Ratio	1.00005	_____	.99995	_____	_____
25	10 V DC to REF H to V H and REF L to V L	ACV+DCV/DCV Ratio	1.00143	_____	.99857	_____	_____
26	See Below	CMR Test	- - -	- - -	- - -	- - -	- - -

CMR Test

1. Connect a 1 K ohm resistor between the HIGH and LOW VOLTS terminals and connect GUARD to VOLTS HIGH.
2. Take a reading.
3. Apply 100 V dc between the 3456A's chassis and VOLTS HIGH terminal.
4. The 3456A reading should be within .00001 V of reading in Step 2.

NOTE

Do the tests in the order they are given since, for example, the Reset will set-up the 3456A to a certain configuration (5 digit mode, etc.).

PERFORMANCE TEST RECORD

90 DAY LIMITS

HEWLETT—PACKARD MODEL 3456A

DIGITAL VOLTMETER

SERIAL NO. _____

Test Performed By _____

Date _____

Ohms Test Temperature = 23°C ± 1°C

Step #	Input to 3456A	Set-Up and Configuration	High Limit	Reading	Low Limit	Test Pass	Test Fail
1	Open	Press RESET	- - -	- - -	- - -	- - -	- - -
3	Open	Set to 6 dig. resolution	- - -	- - -	- - -	- - -	- - -
4	4-Wire Short	2-Wire Ohms	00.2024	_____	-00.0024	_____	_____
5	4-Wire Short	4-Wire Ohms	00.0024	_____	-00.0024	_____	_____
6	10 kΩ	Autorange	10.00034 + 3	_____	9.99966 + 3	_____	_____
7	1 kΩ	Autorange	1000.034	_____	999.966	_____	_____
8	100	Autorange	100.0064	_____	99.9936	_____	_____
9	100 kΩ	Autorange	100.0032 + 3	_____	99.9968 + 3	_____	_____
10	1 MΩ	Autorange	1000.072 + 3	_____	999.928 + 3	_____	_____
11	10 MΩ	Autorange	10.00422 + 6	_____	9.99578 + 6	_____	_____
12	1 GΩ	Autorange	1160.001 + 6	_____	893.999 + 6	_____	_____
13	1 MΩ	2-Wire Ohms	1000.072 + 3	_____	999.928 + 3	_____	_____
14	10 kΩ	4-Wire Ohms 100 K Range	10.0005 + 3	_____	9.9995 + 3	_____	_____
15	10 kΩ	Autozero Off	10.0007 + 3	_____	9.9993 + 3	_____	_____
16	100 kΩ	Autozero On 2-Wire O.C.	100.0034 + 3	_____	99.9966 + 3	_____	_____
17	100 kΩ	4-Wire O.C.	100.0032 + 3	_____	99.9968 + 3	_____	_____

PERFORMANCE TEST RECORD

90 DAY LIMITS

HEWLETT—PACKARD MODEL 3456A

DIGITAL VOLTMETER

SERIAL NO. _____

Test Performed By _____

Date _____

ACV Test Temperature = 23°C ± 1°C

Step #	Input to 3456A	Set-Up and Configuration	High Limit	Reading	Low Limit	Test Pass	Test Fail
1	Open	Press RESET	- - -	- - -	- - -	- - -	- - -
2	.01 V DC	ACV+DCV	.01072	_____	.00928	_____	_____
3	.01 V, 1 kHz	ACV	.01071	_____	.00929	_____	_____
4	0.1 V, 1 kHz	ACV	.10077	_____	.09923	_____	_____
5	0.5 V, 1 kHz	ACV	.50105	_____	.49895	_____	_____
6	1.0 V, 1 kHz	ACV	1.00140	_____	.99860	_____	_____
7	10 V, 1 kHz	ACV	10.0140	_____	9.9860	_____	_____
8	100 V, 1 kHz	ACV	100.140	_____	99.860	_____	_____
9	700 V, 1 kHz	ACV	701.68	_____	698.32	_____	_____
10	.01 V, 100 kHz	ACV	.01296	_____	.00704	_____	_____
11	1.0 V, 100 kHz	ACV	1.00840	_____	.99160	_____	_____
12	10 V, 100 kHz	ACV	10.0840	_____	9.9160	_____	_____
13	100 V, 100 kHz	ACV	100.840	_____	99.160	_____	_____
14	700 V, 100 kHz	ACV	707.24	_____	692.76	_____	_____
15	1.0 V, 250 kHz	ACV	1.05650	_____	.94350	_____	_____
16	10 V, 250 kHz	ACV	10.5650	_____	9.4350	_____	_____
17	1.0 V, 20 Hz	Filter On	1.00400	_____	.99600	_____	_____
18	1.0 V, 20 Hz	ACV+DCV	1.00400	_____	.99600	_____	_____

SECTION I
GENERAL INFORMATION

1-1. INTRODUCTION.

1-2. The information contained in this Manual is for the Installation, Operation, HP-IB Programming and Service of the Hewlett-Packard Model 3456A Digital Voltmeter.

NOTE

HP-IB is Hewlett-Packard's implementation of IEEE Std. 488-1975, "Standard Digital Interface for Programmable Instrumentation."

1-3. The Installation, Operating, and HP-IB Programming information in this Manual is also contained in the Operating Manual.

1-4. This section in the manual contains general information concerning the 3456A Digital Voltmeter. Included are instrument description, specifications, supplemental characteristics, instrument and manual identification, options, accessories, and other information on the instrument.

1-5. DESCRIPTION.

1-6. The Hewlett-Packard Model 3456A is a versatile Digital Voltmeter with ac, dc, ohms, and various math functions. This voltmeter is an excellent bench meter and since it is remotely programmable it is an exceptional system measurement device. Other features for which you may have some good uses are the selection of power line cycles integrated, the selection of certain number of readings/trigger, settling delay, ratio, and other unique and useful functions.

1-7. The 3456A also employs a feature called AUTO ZERO. This feature of the instrument is very useful for good stability. The internal reference device and reference resistors are also selected for good accuracy and stability. Another good feature is the TEST function of the 3456A. With this function the instrument's operation can be partially verified for correct operation by the operator.

1-8. SPECIFICATIONS.

1-9. Specifications of the 3456A are the performance characteristics of the instrument which are warranted. These specifications are listed in Table 1-1, and are the performance standards or limits against which the instrument can be tested. Included in Table 1-1 are also some supplemental characteristics of the 3456A and should be considered as additional and general information for you, the user. Because of the many operational capablities of the 3456A, exercise care when determining the instrument's specifications.

1-10. Any changes in the specifications due to manufacturing changes, design, or traceability to the National Bureau of Standards will be covered in a manual change supplement or revised manual pages. The specifications listed here supercede any previously published.

1-11. INSTRUMENT AND MANUAL IDENTIFICATION.

1-12. Instrument identification is by a serial number located on the rear panel of the instrument. Hewlett-Packard uses a two-part serial number. The first part (prefix) identifies a series of instruments and the last part (suffix) identifies a particular instrument within a series. A letter between the prefix and suffix identifies the country in which the 3456A is manufactured.

1-13. This manual applies to instruments with serial number indicated on the title page. Updating of the manual is accomplished either by a change sheet or revised pages.

1-14. OPTIONS.

1-15. The following options are available for use with the 3456A:

Option 350:	for 50 Hz Power Source
Option 360:	for 60 Hz Power Source
Option 907:	Front Handle Kit
Option 908:	Rack Mounting Kit
Option 909:	Front Handle and Rack Mounting Kit
Option 910:	Additional Set of Manuals

1-16. ACCESSORIES SUPPLIED.

1-17. The 3456A is supplied with a 3/8 amp, 250V fuse for the 220V and 240V power line voltages.

Table 1-1. Specifications.

DC VOLTAGE

Input Characteristics

Range	Maximum Reading (5 digit)	Resolution 6 Digit	5 Digit	4 Digit	Input Resistance	Maximum Input Voltage
0.1V	.119999V	100 nV	1 μV	10 μV	> $10^{10}\Omega$	± 1000V peak
1.0V	1.19999V	1 μV	10 μV	100 μV	> $10^{10}\Omega$	
10.0V	11.9999V	10 μV	100 μV	1mV	> $10^{10}\Omega$	
100.0V	119.999V	100 μV	1mV	10mV	10MΩ ± .5%	
1000.0V	1000.00V	1mV	10mV	100mV	10MΩ ± .5%	

Guard to Chassis: ± 500V peak
Guard to Low: ± 200V peak

Measurement Accuracy: ± (% of Reading + Number of Counts).
Auto-zero on and filter off.

24 hours: 23°C ± 1°C

Range	6 Digit (≥ 10 PLC*)	6 Digit (1 PLC)	5 Digit (.1 PLC)	4 Digit (.01 PLC)
0.1V	.0022 + 24	0.0024 + 32	0.007 + 14	0.06 + 3
1.0V	0.0009 + 4	0.0012 + 5	0.007 + 3	0.06 + 2
10.0V	0.0008 + 2	0.0011 + 3	0.007 + 2	0.06 + 2
100.0V	0.0011 + 3	0.0014 + 4	0.007 + 2	0.06 + 2
1000.0V[1]	0.0011 + 2	0.0013 + 3	0.007 + 2	0.06 + 2

90 Day: 23°C ± 5°C

Range	6 Digit (≥ 10 PLC)	6 Digit (1 PLC)	5 Digit (.1 PLC)	4 Digit (.01 PLC)
0.1V	0.0034 + 24	0.0035 + 32	0.008 + 14	0.06 + 3
1.0V	0.0024 + 4	0.0025 + 5	0.007 + 3	0.06 + 2
10.0V	0.0023 + 2	0.0024 + 3	0.007 + 2	0.06 + 2
100.0V	0.0026 + 3	0.0027 + 4	0.007 + 2	0.06 + 2
1000.0V[1]	0.0024 + 2	0.0025 + 3	0.007 + 2	0.06 + 2

[1]Add $.012\left(\frac{\text{Input Voltage}}{1000}\right)^2$% to % reading.

> 90 days: 23°C ± 5°C
Add ± .0006% of Reading/month to 90 day accuracy.

Temperature Coefficient: (5 digit)[2] ± (% of Reading + Number of Count)/°C

Range	0.1V	1.0V	10.0V	100.0V	1000.0V
Temp. Coef.	0.0002 + 0.2	0.0002 + 0.02	.0002 + .002	0.0002 + 0.02	0.0002 + 0.02

Auto-Zero OFF: (5 digit)[2]
For a stable environment ± 1°C, add 10 counts for .1V range, 1 count for 1V and 100 ranges, and .1 count for 10V and 1000V ranges.

Filter ON: Rejection is > 60 dB at 50 Hz. Add 2μV for .1V, 1.0V and 10V range and 200 μV for 10V and 1000V range.

[2]For 6 digits, multiply counts by 10
For 4 digits, multiply counts by .1

*Integration in POWER LINE CYCLES

Table 1-1. Specifications (Cont'd).

Response Time:
Filter OFF - For default delay (0.0 seconds), error is < .0005 % of input voltage step.

Filter ON: For default delay (.65 seconds), error is < .01% of input voltage step.

Integration Time in Power Line Cycles (PLC)	Noise Rejection (dB)		
	AC[3, 4] NMR	AC[3, 4] ECMR[4]	DC ECMR[4]
.01 PLC or .1 PLC	0	90	140
> 1 PLC	60	150	140
> 1 PLC with Filter	120	160	140

[3]For 50, 60 Hz (depending on option) ± .09%.
[4]1 KΩ unbalance in Lo

AC RMS VOLTAGE

Input Characteristics

Range	Maximum Reading (5 Digit)	Resolution 6 Digit	5 Digit	4 Digit	Input Impedance	Maximum Input Voltage
1.0V	1.19999V	1 μV	10 μV	100 μV	1MΩ ±.5% shunted by < 75pF	±1000V peak (700V rms) 10^8VHZ
10.0V	11.9999V	10 μV	100 μV	1mV		
100.0V	119.999V	100 μV	1mV	10mV		
1000.0V	700.00V	1mV	10mV	100mV		

Guard to Chassis: ±500V peak
Guard to Low: ±200V peak

Measurement Accuracy: ± (% of Reading + Number of Counts)
Auto-zero on, > 1% of full scale, and DC component < 10% of AC Component.
For inputs > 500V rms add .07% of reading.

24 hours: 23°C ± 1°C

Integration Time In Power Line Cycles (PLC)	Frequency in Hz				
	Filter Off→ 20 to 30	400-20k 30-20k	20k to 50k 20k to 50k	50k to 100k 50k to 100k	[1]100k to 250k [1]100k to 250k
6 Digit (≥ 1 PLC)	.33 + 300	.05 + 550	.15 + 1500	.53 + 2700	5.0 + 6300
5 Digit (.1 PLC)	.34 + 33	.06 + 55	.16 + 150	.54 + 270	5.0 + 630
4 Digit (.01 PLC)	.39 +5	.11 + 7	.21 + 17	.59 + 29	5.1 + 65

90 day: 23°C ± 5°C

Integration Time in Power Line Cycles (PLC)	Frequency in Hz				
	Filter Off→ 20 to 30	400-20k 30-20k	20k to 50k 20k to 50k	50 k to 100k 50k to 100k	[1]100k to 250k [1]100k to 250k
6 Digit (≥ 1 PLC)	.35 + 500	.07 + 700	.17 + 1700	.55 + 2900	5.0 + 6500
5 Digit (.1 PLC)	.36 + 53	.08 + 73	.18 + 173	.56 to 293	5.0 + 653
4 Digit (.01 PLC)	.41 + 7	.13 + 9	.23 + 19	.61 + 31	5.1 + 67

[1]Frequencies > 100 kHz are specified for 1.0V and 10V ranges only.

> 90 day: 23°C ± 5°C (5 digit)[2]
Add ± (.004% of Reading + 12 counts)/month to 90 day accuracy.

Table 1-1. Specifications (Cont'd).

Temperature Coefficient: (5 digit)[2]
± (% of Reading + Number of Counts)/°C
± (.008 + 6)/°C for DC component < 10% AC component
± (.008 + 12)/°C otherwise

[2]For 6 digit, multiply counts by 10.
For 4 digit, multiply counts by .1.

DC Component > 10% of AC Component: (5 digit)[2]
Add ± (.05% of Reading + 50 counts) to accuracy.

Crest Factor: > 7 at full scale.

Common Mode Rejection (1kΩ unbalance in Lo): > 90 dB DC to 60 Hz

Auto-Zero Off: For stable environment ± 1°C no accuracy change.

Default Delays:
Filter Off - .06 seconds
Filter On - .80 seconds

Response Time: For default delay, error is < .1% of input voltage step.

RESISTANCE

Input Characteristics

Range	Maximum Reading (5 Digit)	6 Digit	Resolution 5 Digit	4 Digit	Current Through Unknown	Maximum Valid Reading Voltage	Maximum Open Circuit Voltage
100Ω	119.999Ω	100μΩ	1mΩ	10mΩ	1mA	1.2V	5.5V
1kΩ	1199.99Ω	1mΩ	10mΩ	100mΩ	1mA	1.2V	5.5V
10kΩ	11.9999kΩ	10mΩ	100mΩ	1Ω	100μA	1.2V	5.5V
100kΩ	119.999kΩ	100mΩ	1Ω	10Ω	50μA	6V	9.5V
1MΩ	1199.99kΩ	1Ω	10Ω	100Ω	5μA	6V	9.5V
10MΩ	11.9999MΩ	10Ω	100Ω	1kΩ	500nA	6V	9.5V
100MΩ	119.999MΩ	100Ω	1kΩ	10kΩ	≤ 500nA[1]	5V	5.5V
1GΩ	1000.00MΩ	1kΩ	10kΩ	100kΩ	≤ 500nA[1]	5V	5.5V

Non-destructive overload: 350V peak.

Measurement Accuracy: ± (% of Reading + Number of Counts)
Auto-Zero on, filter off, and 4-wire ohms.

24 hours: 23°C ± 1°C

Range	6 Digit (≥ 10 PLC)	6 Digit (1 PLC)	5 Digit (.1 PLC)	4 Digit (.01 PLC)
100Ω	0.003 + 24	0.003 + 32	0.009 + 14	0.07 + 3
1kΩ	0.002 + 4	0.003 + 5	0.008 + 3	0.07 + 2
10kΩ	0.002 + 4	0.003 + 5	0.008 + 3	0.07 + 2
100kΩ	0.002 + 2	0.003 + 3	0.008 + 2	0.07 + 2
1MΩ	0.006 + 2	0.006 + 3	0.012 + 2	0.07 + 2
10MΩ	0.041 + 2	0.041 + 3	0.07 + 2	0.12 + 2
100MΩ	1.3 + 1	1.3 + 1	1.5 + 1	1.5 + 1
1GΩ	11 + 1	11 + 1	13 + 1	13 + 1

[1]Ohms source is a 500nA current source in parallel with a 10MΩ resistance.

Table 1-1. Specifications (Cont'd).

90 days: 23°C ± 5°C

Range	6 Digit (≥ 10 PLC)	6 Digit (1 PLC)	5 Digit (.1 PLC)	4 Digit (.01 PLC)
100Ω	0.004 + 24	0.004 + 32	0.01 + 14	0.07 + 3
1kΩ	0.003 + 4	0.004 + 5	0.009 + 3	0.07 + 2
10kΩ	0.003 + 4	0.004 + 5	0.009 + 3	0.07 + 2
100kΩ	0.003 + 2	0.004 + 3	0.009 + 2	0.07 + 2
1MΩ	0.007 + 2	0.007 + 3	0.013 + 2	0.07 + 2
10MΩ	0.042 + 2	0.042 + 3	0.07 + 2	0.12 + 2
100MΩ	1.8 + 1	1.8 + 1	2.0 + 1	2.0 + 1
1GΩ	16 + 1	16 + 1	18 + 1	18 + 1

> 90 days: 23°C ± 5°C
Add ± .0004% of Reading/month to 90 day accuracy.

2-Wire Ohms Accuracy: Same as 4-wire ohms except add < .2 ohm offset.

Auto-Zero Off Accuracy: (5 digit)[2]
For a stable environment ± 1°C, add 10 counts for 100Ω range, 1 count for 1kΩ range and 10kΩ ranges, and .2 counts for ≥ 100kΩ ranges.. Changes in lead resistance are not corrected for a 4-wire ohms.

Range	Maximum Lead Resistance for 4-Wire Ohms	Maximum Offset Voltage for Offset Compensated Ohms	Default Delay in Seconds
100Ω	10Ω	.01V	0
1kΩ	100Ω	.1V	0
10kΩ	1000Ω	.1V	0
100kΩ	1000Ω	.5V	.001
1MΩ	1000Ω		.008
10MΩ	1000Ω		.08
100MΩ	1000Ω		.08
1GΩ	1000Ω		.08

Offset Compensated Ohms Accuracy: Same as 2-wire and 4-wire except maximum reading may be reduced by 9% for large offset voltages. 100Ω - 100kΩ range are used.

Response Time: With default delay and < 200pF of capacitance, first reading is in specification.

Filter is not operational in ohms.

Temperature Coefficient: (5 digit)[2] ± (% of Reading + Number of Counts)/°C

Range	100Ω	1kΩ 10kΩ 100kΩ	1MΩ	10MΩ	100MΩ	1GΩ
T.C.	.0004 +.2	.0004 +.02	.0004 +.004	.0010 +.004	.16 +0	1.6 +0

[2]For 4 digit, multiply counts by .1.
For 6 digit, multiply counts by 10.

Table 1-1. Specifications (Cont'd).

RATIO

Type: DC/DC, AC/DC, or (AC + DC)/DC

Method: 4-Wire with Volts Lo input common.

$$\text{Ratio} = \frac{\text{Signal Voltage}}{\text{Ref. Hi Voltage} - \text{Ref. Lo Voltage}}$$

Signal Measurement: Same as DC Volts, or AC + DC Volts.

Reference Measurement: Automatically selects .1V, 1V, or 10V DC Volts range and a 0.0 msec. settling time. Filter is off.

Maximum Reference Voltage:

Ref. Hi:	± 12V
Ref. Lo:	± 9% of Ref. Hi.
Ref. Hi-Ref. Lo:	± 11.9999V
Protection:	± 350V peak

Accuracy: Total % signal error + total % reference error (same as .1V, 1V, or 10V DC volts)

MEMORY

Reading Store:

- Can store up to 350 most recent readings.
- Can be recalled from the HP-IB interface or the front panel.

Program Memory:

- Can execute an internal program which controls instrument configuration and measurement sequence.
- Program is input from the HP-IB interface with up to 1400 ASCII characters.

Memory Size:

- Total size = 1400 bytes
- Memory used = 1 byte per ASCII character + 4 bytes per reading stored.

READING RATE

Reading rates are with autorange, math, display and filter off. Output is to internal memory using internal trigger and packed Mode. Packed output in place of internal memory adds .35 msec; ASCII output adds 2.3 msec.

Rates vs. Integration Time and Auto-Zero: DC Volts and 100Ω thru 10kΩ ranges with default (-0.0 sec.) delay. Also, AC or AC + DC Volts and 100kΩ thru 10MΩ ranges with 0.0 sec. delay.

Integration Time in Power Line Cycles (PLC)	Rates			
	Auto-Zero Off		Auto-Zero On	
	60 Hz	50 Hz	60 Hz	50 Hz
0.01	330	290	210	180
.10	210	180	120	100
1.00	48	40	25	20.8
10.00	5.8	4.8	2.9	2.4
100.00	.57	0.47	.29	0.24

Rates with 1 Power Line Cycle Integration and Default Delays.

	Rates	
	60 Hz	50 Hz
– DC Volts and 100Ω thru 10kΩ, Auto-zero Off	48.0	40.00
– DC Volts, Filter ON	1.48	1.47
– AC or AC + DC Volts, Auto-zero OFF	12.0	11.00
– AC or AC + DC Volts, Filter ON	1.2	0.95
– 100kΩ range, Auto-zero OFF	46.0	35.0
– 1MΩ range, Auto-zero OFF	34.0	28.0
– 10MΩ range, Auto-zero OFF	9.9	9.0
– 100MΩ and 1GΩ range, Auto-zero OFF	6.6	6.10
– DC/DC ratio	5.2	4.40
– Offset Compensated Ohms	10.0	9.00

Table 1-1. Specifications (Cont'd).

MATH FUNCTION SPECIFICATIONS

General: Math function specifications do not include error in X (instrument reading) or in entered values (R,L,U,Y,Z). Range of values input or output is ± (0.000000 x 10^{-9} to 1999999 x 10^{9}). Out of range values send "LL" to display and + 1999999. x 10^{9} to HP-IB.

PASS/FAIL: Displays: "HI" for values > upper limit (U), "LO" for values < lower limie (L), and X for values between the limits, with no introduced error.

SRQ mask can be programmed to respond to HI or LO conditions.

Maximum execution time: 20ms

STATISTICS:

$$\text{Mean (M)} = X_1 + \frac{1}{C} \sum_{i=1}^{C} (X_i - X_1)$$

$$\text{Variance (V)} = \frac{\sum_{i=1}^{C} (X_i - X)^2 - \frac{1}{C}\left[\sum_{i=1}^{C} (X_i - X_1)\right]^2}{C - 1}$$

Maximum (U) and Minimum (L) are the most positive and negative instrument readings, respecitvely. X is displayed during calculation of statistics.

X_1 is the first reading taken after enabling statistics and is stored in the Z register. The number of readings taken (C) is stored in the count register.

$$\text{Accuracy of Mean: } < \pm \frac{C(U-L)}{10^{11}} + 1 \text{ LSD}$$

$$\text{Accuracy of Variance: } < \pm \frac{C(U-L)^2}{10^{8}} + 1 \text{ LSD}$$

Maximum execution time: 50ms

NULL: $X - X_1$ (X_1 is the first valid reading taken after enabling null and is stored in the Z register).

Maximum execution time: 15ms

dBm(R): $10 \log \frac{x^2/R}{1\text{mW}}$ R is the user-entered impedance.

Output range: -280 to +340 dBm

Accuracy: ± .001 dBm

Maximum execution time: 150ms

THERMISTOR (°F): Converts resistance of thermistor HP0837-0164 to temperature in °F.

Output range: -112 to 302°F

Accuracy: -103 ≤ T ≤ + 266 °F: ± 11°F max.
-116 ≤ T ≤ + 320°F: ± 27°F max.

Maximum execution time: 150ms

THERMISTOR (°C): Converts resistance of thermistor HP0837-1064 to temperature in °C.

Output range: -80 to 150°C

Accuracy: -75 ≤ T ≤ + 130°C ± 06°C max.
-80 ≤ T ≤ + 150°C ± 15°C max.

Maximum execution time: 100ms

SCALE: (X-Y)/Y

Accuracy: ± 1 LSD

Maximum execution time: 60ms

% ERROR: 100% x (X-Y)/Y

Accuracy: ± 1 LSD

Maximum execution time: 60ms

dB: $20 \log \frac{x}{y}$

Output Range: -620 to +620 dB

Accuracy: .001 dB

Maximum execution time: 100ms

GENERAL

Voltmeter Control Functions: Description: The voltmeter control function in the math section of the front panel is designed to control the measurement parameters of the 3456A. Included in this front panel section is the:

1) Number of digits displayed.
2) Number of readings per trigger.
3) Delay time between readings.
4) Integration time in number of power line cycles (PLC).

Number of Digits Displayed allows selection of 3 to 6 digits displayed plus sign and exponent. The range of the display is ± 1,999,999 ± 9.

Number of Readings per Trigger allows selection of specific number of readings to be taken with just one trigger. The time between readings is controlled by the delay time selected.

Delay Time allows selection of the time between measurement cycles. It is provided to allow the selection of settling time. The range is from 0 to 999.999 sec. in 0.001/sec. increments. Accuracy is 1% of time selected.

Integration Time in Power Line Cycles allows the selection of the time for measurement integration. The units of integration time in power line cycles (PLC) apply for both 50 and 60 Hz power line frequencies. The range of integration time selection is from 0.01 to 100 power line cycles (PLC) per measurement.

Front-Rear Terminal Switch - On the front panel. Operated manually. Its status can be read via software.

The actual measurement time is a function of the integration time, the delay time, auto zero, filter, etc., voltmeter complete, external trigger, and function selected.

Operating Temperature: 0 C to 50 C

Warmup Time: One hour to meet all specifications

Humidity Range: 95% R.H., 0 C to 40 C

Storage Temperature: -40 C to +75 C

Power: 100/120/240V + 5%, -10% 48 Hz to line operation 80VA; 220V ± 10% 48 Hz to line operation 80VA.

Size: 88.9mm high x 425.5mm wide x 527.1mm deep (3½" high x 16¾" wide x 20¾" deep)

Weight: Net 10.49 kg (23.13lbs.)

1-18. ACCESSORIES AVAILABLE.

1-19. The following is a list of available accessories for the 3456A:

Accessory No.	Description
10631A	HP-IB Cable 1 Meter (39.37 in.)
10631B	HP-IB Cable 2 Meter (78.74 in.)
10631C	HP-IB Cable 4 Meter (157.48 in.)
10631D	HP-IB Cable 0.5 Meter (19.69 in.)
11000A	Test Leads, Dual Banana Both Ends
11002A	Test Leads, Dual Banana to Probe and Alligator
34111A	High Voltage Probe (40 kV dc)
44414A	4 Thermistors

1-20. SAFETY CONSIDERATION.

1-21. The 3456A is a safety class 1 instrument (provided with a protective earth connection). The instrument and manual should be reviewed for safety symbols and instructions before using.

1-22. RECOMMENDED TEST EQUIPMENT.

1-23. Required equipment to maintain the Model 3456A is listed in Table 1-2. Other equipment may be substituted if it meets the requirements listed in the table. The table is also repeated in Section IV of the Operating and Service Manual.

Table 1-2. Recommended Test Equipment.

Instrument	Critical Specification	Recommended Model	Use
DC Voltage Standard	Voltage: 10mV to 1000V Accuracy: ±.005%	Systron Donner Model M107	PAT
DC Transfer Standard	Output Voltages: 1V, 10V, 1.018V, 1.019V Accuracy: ±5ppm Stability: ±.001% (30 Days)	Fluke Model 731B	PA
AC Calibrator	Frequency: 20 Hz to 250 kHz Output Level: 100mV to 1000V Accuracy: ±.1% Voltage Stability (6 mos.) ±.02%	Fluke Model 5200A and Model 5215A	PAT
Reference Divider	Division Ratio Accuracy: ±.001% Output Voltage Range: 1V to 1kV	Fluke Model 750A	PA
Resistance Standard	Resistance: 100Ω Accuracy: ±.0005%	Guildline Model 9330/100 or 9330A/100	P
	Resistance: 1kΩ Accuracy: ±.0005%	9330/1K or 9330A/1K	PA
	Resistance: 10kΩ Accuracy: ±.001%	9330/10K or 9330A/10K	PA
	Resistance: 100kΩ Accuracy: ±.001%	9330/100K or 9330A/100K	PA
	Resistance: 1MΩ Accuracy: ±.002%	9330/1M	PA
	Resistance: 10MΩ Accuracy: ±.01%	9330/10M	PA
	Resistance*: 1GΩ Accuracy: ±2%	-hp- Part No. 03456-67902	P
DC Null Voltmeter	Voltage Range: 1μV to 10V	-hp- Model 419A	PA
Bus System Analyzer**	HP-IB Control Capability	-hp- Model 59401A	T
Desktop Computer	HP-IB Control Capability serves as printer for output data	-hp- Model 9825A, 9825B, 9835A, 9845B, or 85A	OT
Oscilloscope**	Bandwidth: DC to 100 MHz Sweep Time: 50ns to 20ms/div	-hp- Model 1740A	T
Digital Voltmeter**	Voltage Range: 100μV to 1000V Resolution: 1 μV	-hp- Model 3456A (or 3455A)	T
Resistors	Resistances: 1 kΩ ± 10%	-hp- Part No. 0684-1021	
Signature Analyzer**		-hp- Model 5004A	T
Test Program Cartridges*		-hp- Part Number 03456-10001 (9825A/B) 03456-10002 (9835A, (9845A/B) 03456-10003 (85A)	T

Table 1-2. Recommended Test Equipment (Cont'd).

Instrument	Critical Specification	Recommended Model	Use
Isolation Logic Test Jumper*		-hp- Part No. 03456-61602	T
HP-IB Signature Analysis Modules*,**		-hp- Part Number 5061-1153 5061-1154 5061-1155	T

*These items included in 3456A Digital Voltmeter Service Kit for Component Level Repair (-hp- Part Number 03456-69800)

**These items are not required if a board level repair strategy is to be used. This strategy does require a 3456A Digital Voltmeter Service Kit for Board Level Repair (-hp- Part Number 03456-69801).

P = Performance Test
A = Adjustment
T = Troubleshooting
O = Operators Check

SECTION II
INSTALLATION

2-1. INTRODUCTION.

2-2. This section of the manual contains the necessary information and instructions to install and interface the Model 3456A Digital Voltmeter. Included are initial inspection procedures, power and grounding requirements, enviromental information, and instructions for repacking the instrument for shipment.

2-3. INITIAL INSPECTION.

2-4. This instrument was carefully inspected both mechanically and electrically before shipment. It should be free of mars or scratches and in perfect electrical order upon receipt. The instrument should be inspected for any damage that may have occurred in transit. If the shipping container or cushioning material is damaged, it should be kept until the contents of the shipment have been checked for completeness and the instrument has been mechanically and electrically checked. Procedures for checking the electrical performance of the 3456A are given in Section IV. If there is mechanical damage, or the contents are incomplete, or the instrument does not pass the performance tests, notify the nearest Hewlett-Packard Office (a list of the -hp- Sales and Service Offices is located at the back of the manual). If the shipping container is damaged, or the cushioning material shows signs of stress, notify the carrier as well as the Hewlett-Packard Office. Save the shipping materials for the carrier's inspection.

2-5. PREPARATION FOR USE.

2-6. Power Requirements.

2-7. The Model 3456A requires a power source of 100, 120, 220, or 240 V ac (−10%, +5%), 48 Hz to 66 Hz single phase. Maximum power consumption is 80 VA.

2-8. Line Voltage Selection.

2-9. Figure 2-1 provides information for line voltage and fuse selection. Make sure the rear panel line selector switches are in the correct position and the correct fuse is installed in the 3456A, before applying ac power to the instrument.

2-10. Power Cords and Receptacles.

2-11. Figure 2-2 illustrates the different power plug configurations that are available to provide ac power to the 3456A. The -hp- part number shown directly below the individual power plug drawing is the part number for the power cord set equipped with the appropriate mating plug for that receptacle. If the appropriate power cord is not included with the instrument, notify the nearest -hp- Sales and Service Office and a replacement cord will be provided.

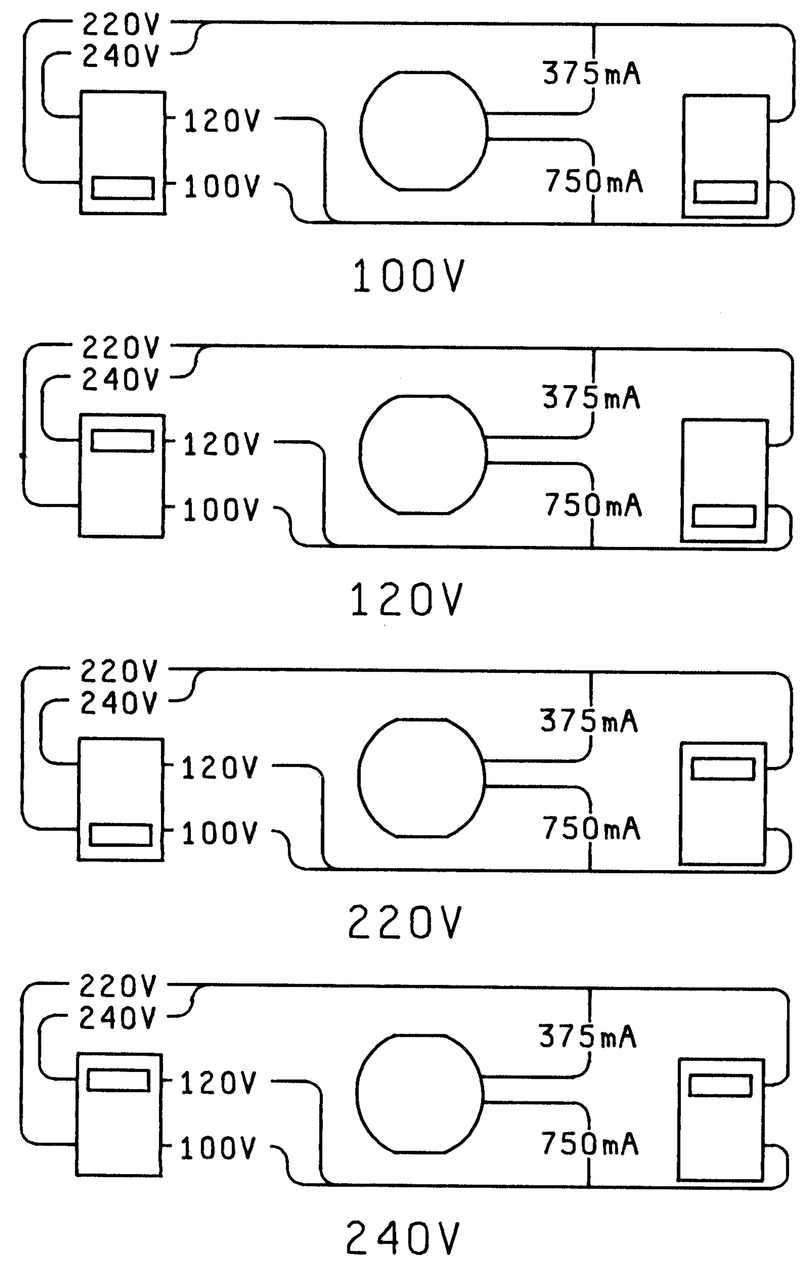

NOMINAL VOLTAGE	OPERATING RANGE −10%, +5% OF NOMINAL	FUSE
100 V	90 to 105 Volts	750 mA
120 V	108 to 126 Volts	750 mA
220 V	198 to 231 Volts	375 mA
240 V	216 to 252 Volts	375 mA

Figure 2-1. Line Voltage Selection.

2-12. Grounding Requirements.

2-13. To protect operating personnel, the National Electrical Manufacturer's Association (NEMA) recommendation is to ground the instrument panel and cabinet. The -hp-Model 3456A is equipped with a three conductor power cable which, when plugged into an appropriate receptacle, grounds the instrument.

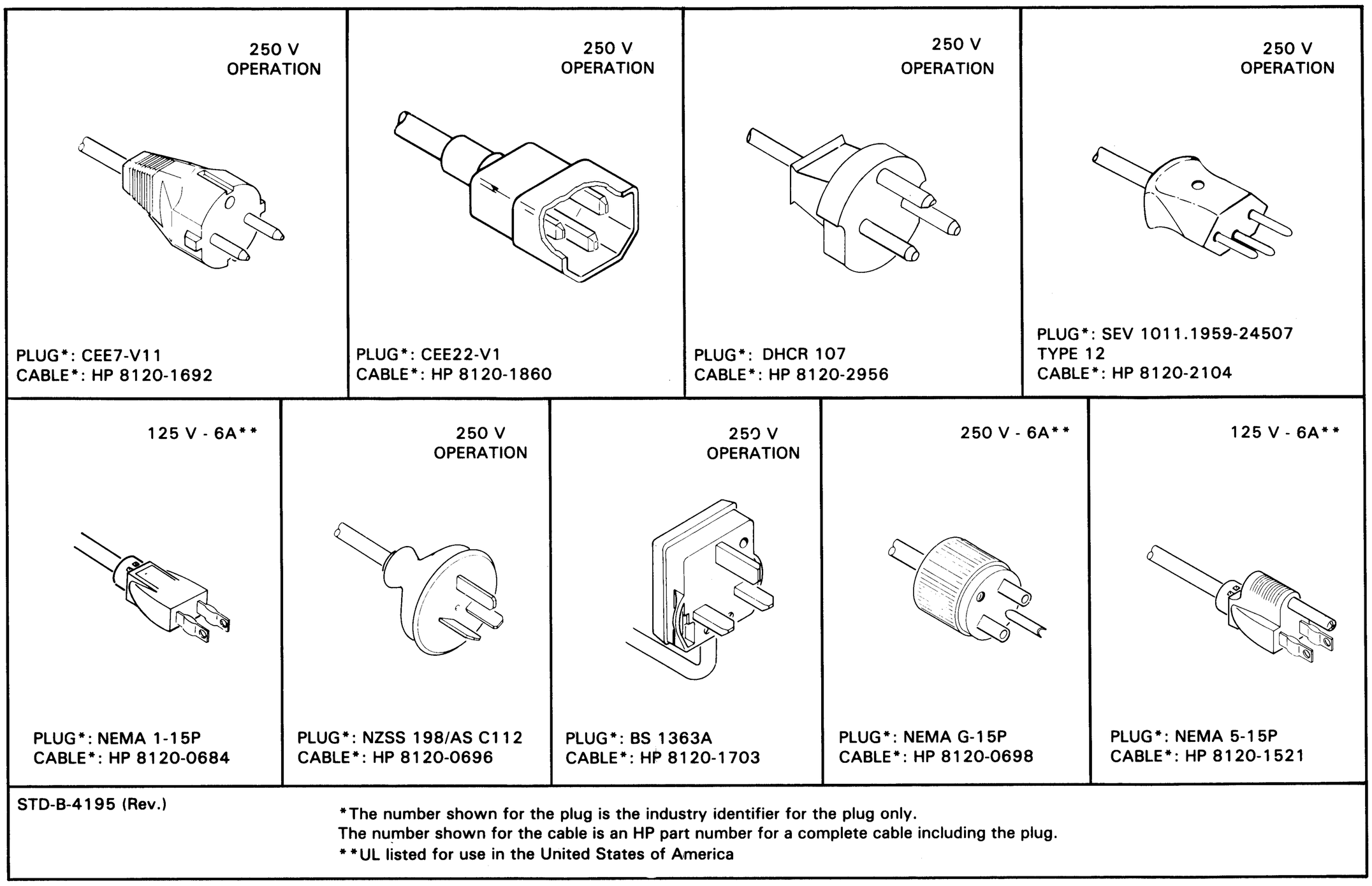

Figure 2-2. Power Cables.

2-14. Bench Use.

2-15. The Model 3456A is shipped with feet and tilt stands installed and is ready for use as a bench instrument. The feet are shaped to permit "stacking" with other full-module Hewlett-Packard instruments.

2-16. Rack Mounting.

2-17. The -hp- Model 3456A can be rack mounted by adding rack mounting kit Option 908 or Option 909. The basic hardware and instructions for rack mounting are contained in Option 908 and addition of front handles to the basic rack mount kit are contained in Option 909. The rack mount kits are designed to permit mounting of the 3456A in a standard 19 inch rack, provided that sufficient rear support is available. Also make sure the air intake at the rear of the instrument is unobstructed.

2-18. Interface Connections.

2-19. The -hp- Model 3456A is compatible with the Hewlett-Packard Interface Bus (HP-IB).

NOTE

HP-IB is Hewlett-Packard's implementation of IEEE Std. 488-1975, "Standard Digital Interface for Programmable Instrumentation."

The 3456A's HP-IB connection is made by an HP-IB Interface cable to the 24 pin HP-IB connector located at the rear panel. A typical interconnection of HP-IB is shown in Figure 2-3 in which system interconnection is made by three HP-IB Interface Cables. The ends of the cables have both a male and female connector to enable connections to other instruments and cables. As many as 15 instruments can be connected by the same interface bus. However, the maximum length of cable that can effectively be used to connect a group of instruments should not exceed 2 meters (6.5 feet) times the number of instruments to be connected, or 20 meters (65.6 feet), whichever is less. For a pictorial view of the HP-IB connector and its pin designation, refer to Figure 2-4.

2-20. Address Selection.

2-21. The HP-IB "talk" and "listen" address of the Model 3456A is set by the instrument's address switch, located at the rear panel. The talk and listen address is a 5-bit code which is selected to provide a unique address for each HP-IB instrument. The 3456A normally leaves the factory with the address switch set to decimal code "22." The corresponding ASCII code is a listen address code of "6" and a talk code of "V." Refer to Figure 2-5 for the factory address switch setting.

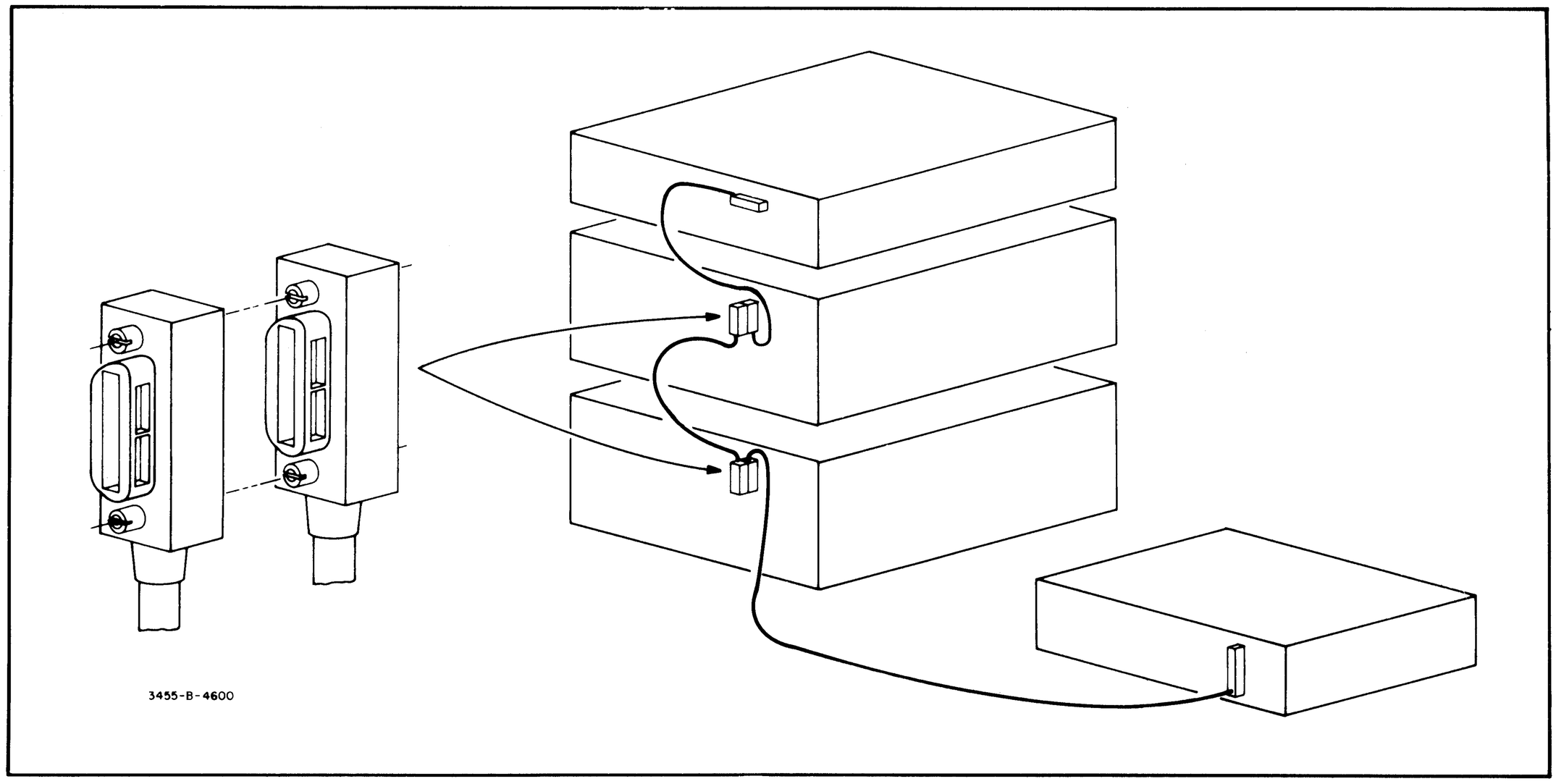

Figure 2-3. Typical HP-IB System Interconnections.

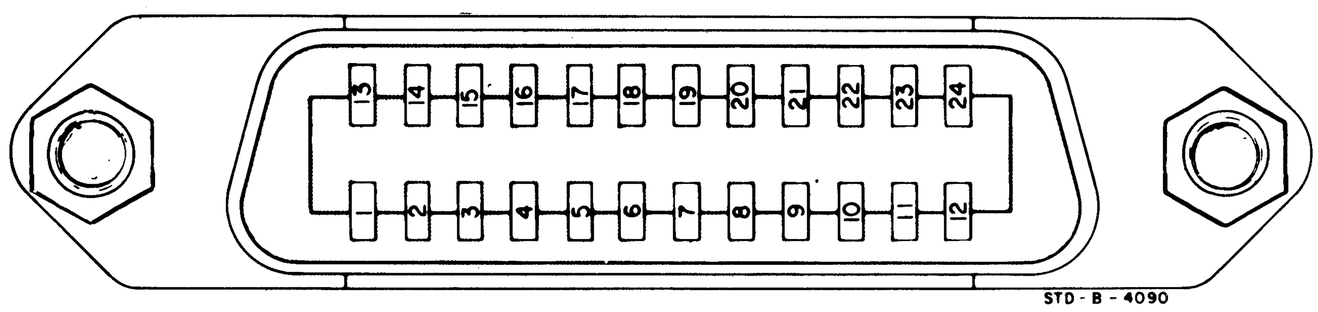

PIN	LINE
1	DI01
2	DI02
3	DI03
4	DI04
13	DI05
14	DI06
15	DI07
16	DI08
5	EOI
17	REN
6	DAV
7	NRFD
8	NDAC
9	IFC
10	SRQ
11	ATN
12	SHIELD–CHASSIS GROUND
18	P/O TWISTED PAIR WITH PIN 6
19	P/O TWISTED PAIR WITH PIN 7
20	P/O TWISTED PAIR WITH PIN 8
21	P/O TWISTED PAIR WITH PIN 9
22	P/O TWISTED PAIR WITH PIN 10
23	P/O TWISTED PAIR WITH PIN 11
24	ISOLATED DIGITAL GROUND

THESE PINS ARE INTERNALLY GROUNDED

CAUTION

The 3456A contains metric threaded HP-IB cable mounting studs as opposed to English threads. Metric threaded -hp-10631A, B, or C HP-IB cable lockscrews must be used to secure the cable to the instrument. Identification of the two types of mounting studs and lockscrews is made by their color. English threaded fasteners are colored silver and metric threaded fasteners are colored black. DO NOT mate silver and black fasterners to each other or the threads of either or both will be destroyed. Metric threaded HP-IB cable hardware illustrations and part numbers follow.

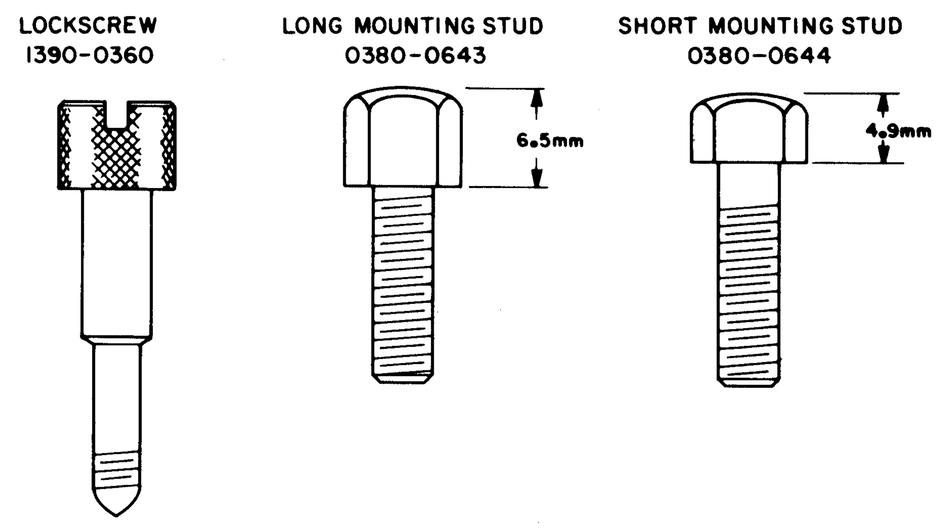

Figure 2-4. HP-IB Connector.

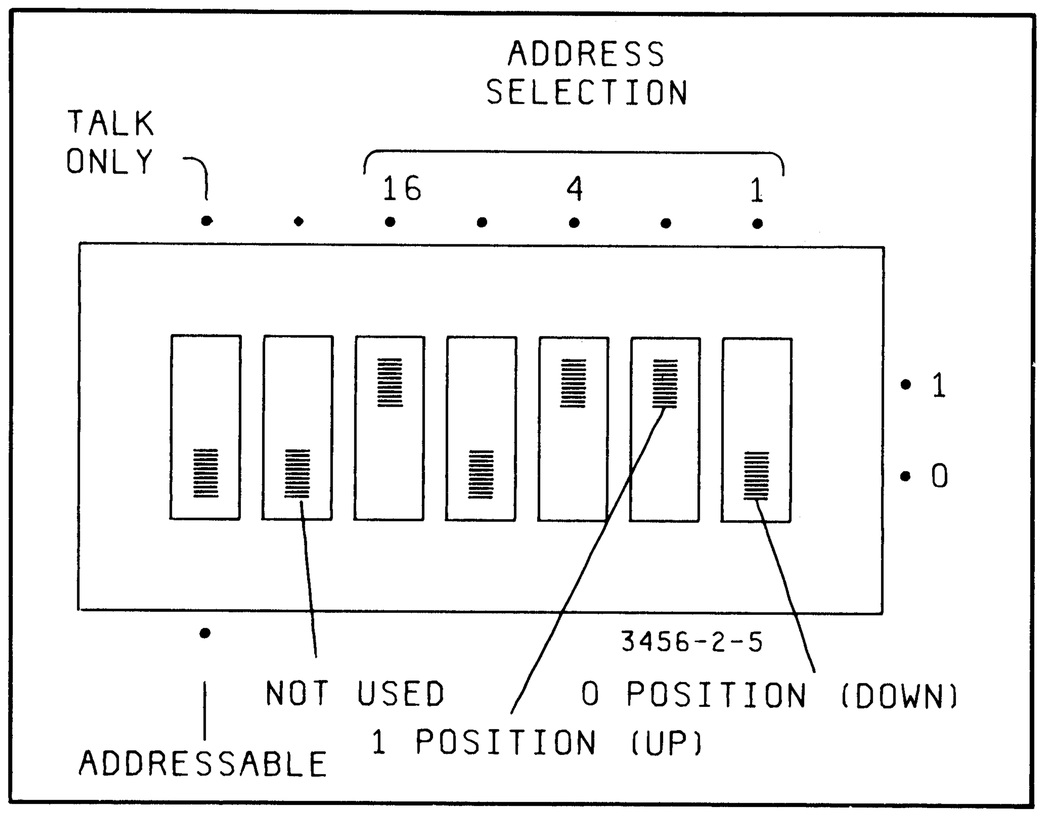

Figure 2-5. 3456A Address Switch.

NOTE

The 5-bit decimal code, consisting of bits A1 through A5, is often used by controllers which use this convention as a System Device Number for instruments.

2-22. "Talk-Only" mode. The instrument has a "Talk-Only" mode which can also be set by the address switch. The Remote Operation chapter in Section III of this manual gives a detailed description of the 3456A's "Talk-Only" mode, including the address codes.

2-23. External Trigger.

2-24. An External Trigger input to the 3456A is provided by a BNC connector located at the rear panel of the instrument. The trigger input should be driven by negative going TTL level signals. For more information refer to Section III in this manual.

2-25. Voltmeter Complete Connector.

2-26. A Voltmeter Complete output is also provided by the 3456A through a BNC connector located at the rear panel. This connector provides an output which is composed of a TTL level signal and is generated during a measurement cycle.

2-27. ENVIRONMENTAL REQUIREMENTS.

WARNING

To prevent electrical fire or shock hazards, do not expose the instrument to rain or excess moisture.

2-28. Operating and Storage Temperature.

2-29. In order to meet and maintain the specifications listed in Table 1-1, the 3456A should be operated within an ambient temperature range of 23°C +/− 5°C (73°F +/− 9°F). The instrument may be operated within an ambient temperature range of 0°C to 55°C (+32°F to 131°F) with less accuracy.

2-30. The 3456A may be stored or shipped within an ambient temperature range of −40C to +75C (−40F to +167F).

2-31. Humidity.

2-32. The instrument may be operated in environments with relative humidity of up to 95%. The instrument must, however, be protected from temperature extremes which may cause condensation within the instrument.

2-33. Altitude.

2-34. The instrument may be operated at altitudes up to 4572 meters (15,000 feet).

2-35. REPACKAGING FOR SHIPMENT.

NOTE

If the instrument is to be shipped to Hewlett-Packard for service or repair, attach a tag to the instrument identifying the owner and indicating the service or repair to be made. Include the model number and full serial number of the instrument. In any correspondence, identify the instrument by model number and full serial number. If you have any questions, contact your nearest -hp- Sales and Service Office.

2-36. Place instrument in original container with appropriate packaging material and secure with strong tape or metal bands. If the original container is not available, a replacement container can be purchased from your nearest -hp- Sales and Service Office.

2-37. If the original container is not to be used, do the following:

1. Wrap the instrument in heavy plastic before placing in an inner container.

2. Place packing material around all sides of the instrument and protect the front panel with cardboard strips.

3. Place the instrument in the inner container in a heavy carton and seal with strong tape or metal bands.

4. Mark shipping container "DELICATE INSTRUMENT," "FRAGILE," etc.

SECTION III
OPERATION

3-1. INTRODUCTION.

3-2. This is the information and instructions for the operation of the -hp- Model 3456A Voltmeter showing front panel and remote operations. In addition, you will find functional checks you can perform. For more advanced users a Quick Reference Guide is shipped with the instrument. The information in the guide is most of the 3456A's operating characteristics, including remote programming codes.

3-3. Before reading the operating information in this section, familiarize yourself with the front and rear panel features as indicated in Figure 3-1. Use the figure as a reference while reading this section.

3-4. Read the front panel operations of the 3456A before the remote operations since most front panel operations also apply to the remote operations.

3-5. PRE-OPERATING INSTRUCTIONS.

3-6. The 3456A's operation can be separated into five main areas. A good understanding of these areas is fundamental to learning the operation of the instrument. The five areas are:

a. Reset and Test Operation.

b. Function, Range and Trigger.

c. Voltmeter Control Functions, (Delay, Number of Readings/Trigger, Number of Digits Displayed).

d. Math.

e. Remote Operation.

3-7. Refer to Figure 3-1. Note that the 3456A's front panel can be separated into three areas: Display, Voltmeter Configuration, and Numbered Keyboard. Keep these areas in mind when you use the 3456A.

3-8. To learn the operation of the instrument, a logical approach is to ask yourself the following questions:

a. "What type of measurement do I want to make?" - FUNCTION

b. "Do I want autoranging?" - RANGE

c. "Do I want the input filter in?" - FILTER

d. "Is a math operation desired?" - MATH FUNCTION

e. "Do I want remote control of the 3456A?" -REMOTE OPERATION

Once you have decided what you want the 3456A to do, the next step is to learn how to do it.

3-9. GENERAL OPERATING CHARACTERISTICS.

3-10. These paragraphs describe some of the 3456A's General Operating Characteristics. Refer to Figure 3-2, the Display Area, for the following discussion.

3-11. Turn-On and Warm-Up.

3-12. Before connecting ac power to the 3456A, make sure the rear panel line selector switches are set to correspond to the available power line voltage. Be certain the correct fuse is installed in the instrument. To meet accuracy specifications, the 3456A should be warmed up for at least one hour.

3-13. Reset.

3-14. After power connection and warm-up, to make sure the instrument is in the "turn-on" state, press the RESET button. This places the instrument in the power-up condition without cycling power. This provides you a convenient starting place and avoids thermal and electrical shock to the instrument, therefore maintaining its accuracy and improving reliability. The turn-on state is:

FUNCTION	DC
RANGE	AUTO
TRIGGER	INTERNAL
MATH	OFF
DELAY	DEFAULT (0 SEC.)
NUMBER OF READINGS/TRIGGER	1
NUMBER OF POWER LINE CYCLES INT.	10
NUMBER OF DIGITS DISPLAYED	5
AUTOZERO	ON
OPERATING MODE	LOCAL
FILTER	OFF
READING STORAGE	OFF

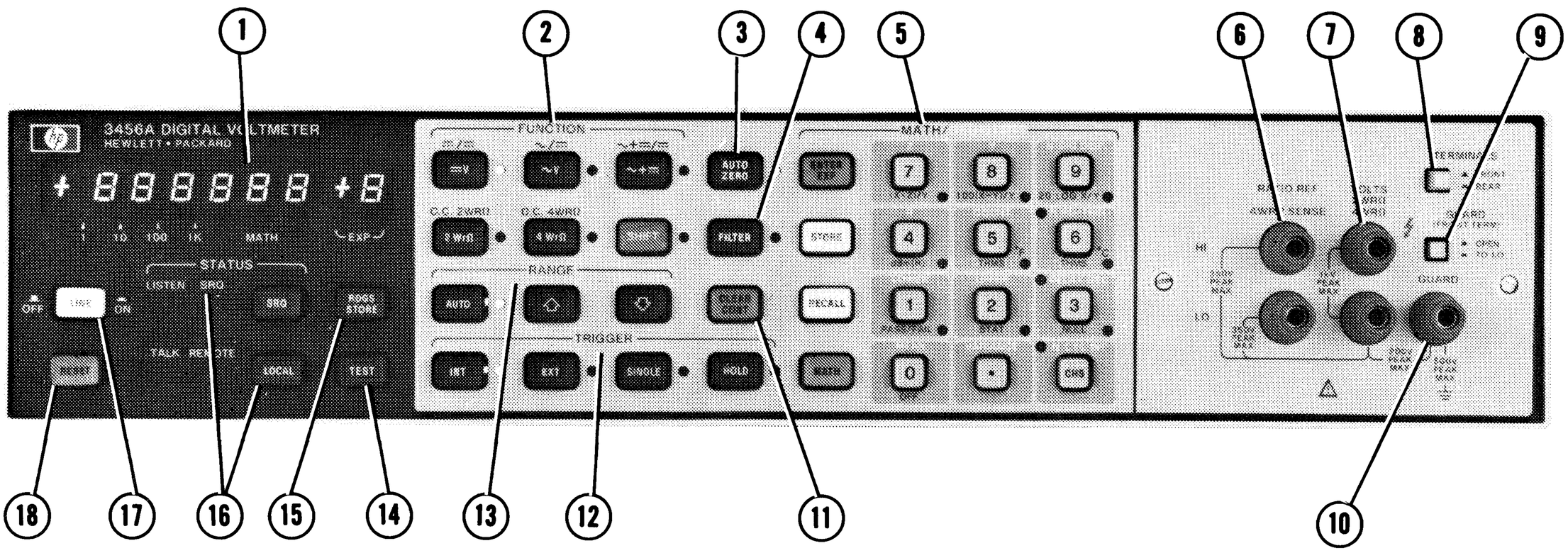

(1) Display - Indicates polarity and amplitude of the measurement. Measurement results are indicated in either 3½, 4½, 5½, or 6½ digits, dependent on the Number of Digits displayed and the Number of Power Line Cycles Integrated. The LED at the bottom left hand corner of the display indicates the front panel sample rate.

(2) Function Selection Buttons - DCV, ACV, ACV+DCV, 2-Wire Ohms, and 4-Wire Ohms. Included is the SHIFT button which is used to place the 3456A into the shifted function consisting of: DCV/DCV Ratio, ACV/DCV Ratio, ACV+DCV/DCV Ratio, 2-Wire O.C. Ohms, and 4-Wire O.C. Ohms. The LED to the function button's right will also light when the button is pressed.

(3) Autozero Button - enables or disables the Autozero feature. The LED to the button's right is lit when the feature is enabled. Refer to Paragraph 3-48 for more information.

(4) Filter - enables or disables the Analog Filter. The LED to the button's right is lit when the Filter is enabled. Refer to Paragraph 3-52 for more information.

(5) Numbered Keyboard - is used to select math operations, storing a number value into registers which are used in some math operations and other operational changes (Number of Digits displayed, etc.). Refer to Paragraph 3-54 for more information.

(6) Ratio Ref/4WRΩ Sense Terminals - are used for the Ratio Reference Voltage or 4-Wire Ohms measurement.

(7) Volts/2WRΩ/4WRΩ Terminals - input terminals for the ACV, DCV, ACV+DCV, and 2-Wire Ohms measurement. In addition, the terminals supply the current for a 4-Wire Ohms measurement.

(8) Front/Rear Switch - With the switch "out" the front terminals are enabled and with the switch "in" the rear terminals are enabled.

(9) Front Guard Switch - internally connects the GUARD terminal to the VOLTS LOW terminal.

(10) Front Guard Terminal.

(11) Clear Cont - is used to continue with the 3456A's last operation after an attempt was made to store into a register. It is also used to clear the display after a register has been recalled.

(12) Trigger Buttons - permits selection of Internal, External, Single, or Hold Trigger modes. An LED to each of the button's right is lit when the button is selected. Refer to Paragraph 3-46 for more information.

(13) Range Selection Buttons - are used to manually or automatically uprange and downrange the 3456A. The LED to the AUTO button's right is lit when Autoranging is selected.

(14) Test Button - enables or disables the 3456A's Internal Test. Refer to Paragraph 3-17 for more information.

(15) Reading Storage Button - allows the 3456A to internally store a number of readings. The LED to the button's right is lit as long as readings are stored. The LED turns off when Reading Storage is disabled and when the 3456A's internal memory is full. Refer to Paragraph 3-101 for more information.

(16) HP-IB Control Buttons and Status Indicators defined as follows:

SRQ Button - enables the 3456A to send a "Require Service Message" when the button is pressed. Refer to Paragraph 3-198 for more information.

Local Button - takes the 3456A out of Remote.

SRQ Light - indicates a "Require Service" condition when lit. Refer to Paragraph 3-130 for more information.

Listen Light - is lit when the 3456A is addressed to "listen".

Talk Light - is lit when the 3456A is addressed to "talk".

Remote Light - indicates that the 3456A is in Remote when lit.

(17) Line Switch - With the switch "out" the 3456A is turned off and with the switch "in" the instrument is on.

(18) Reset Button - returns the 3456A to its turn-on condition when pressed.

Figure 3-1. Front and Rear Panel Features.

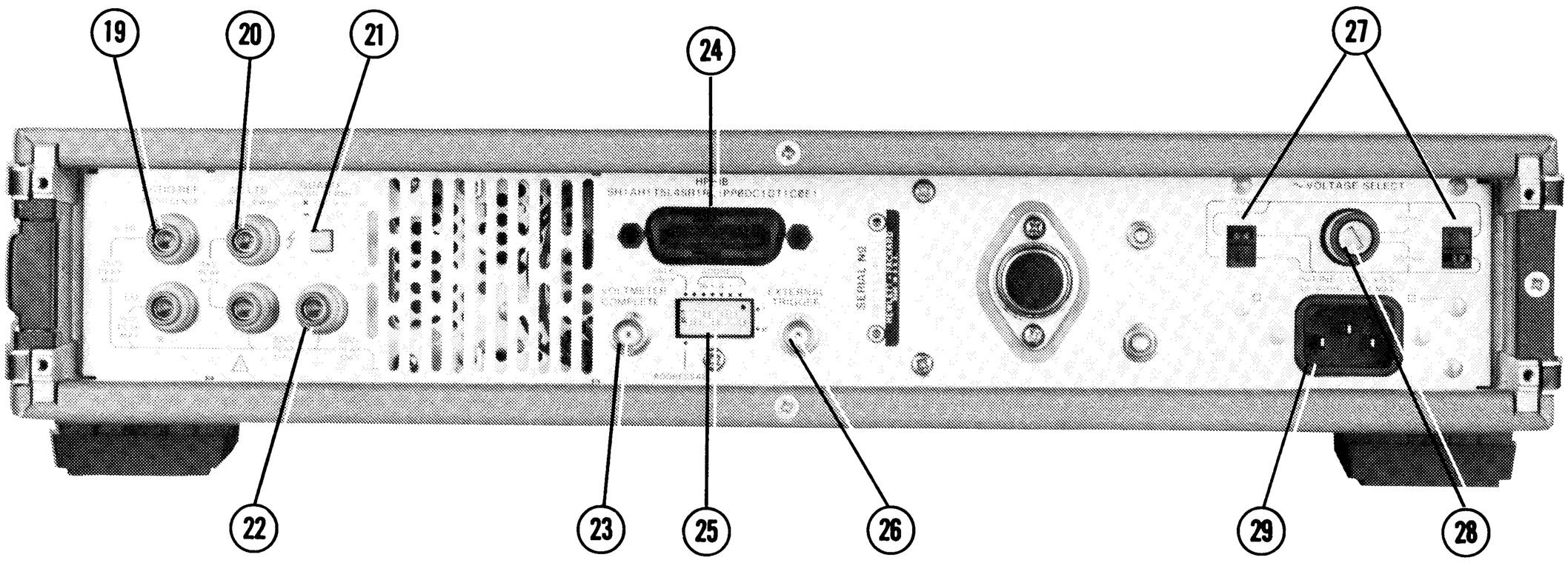

(19) Ratio Ref/4WRΩ Sense Terminals - are used for the Ratio Reference Voltage or 4-Wire Ohms measurement.

(20) Volts/2WRΩ/4WRΩ Terminals - input terminals for the ACV, DCV, ACV+DCV, and 2-Wire Ohms measurements. In addition, the terminals supply the current for a 4-Wire Ohms measurement.

(21) Rear Guard Switch - internally connects the GUARD terminal to the VOLTS LOW terminal.

(22) Rear Guard Terminal.

(23) Voltmeter Complete Connector - Outputs pulse during measurement cycle.

(24) HP-IB Connector used to connect to HP-IB.

(25) HP-IB Address Selection Switch - Sets 3456A HP-IB Address.

(26) External Trigger Input Connector.

(27) Power Line Voltage Selection - Refer to Paragraph 2-8.

(28) Fuse -90 V to 126 V -.75 amp, 198 V to 252 V -.375 amp.

(29) AC Power Connector

Figure 3-1. Front and Rear Panel Features (Cont'd).

3-15. When pressing the RESET button, the display will momentarily display this for about 1 second:

Add 022 0

3456A HP-IB Address in Decimal — 022

Talk-Only Indicator (0 = Normal Mode, 1 = Talk-Only Enabled) — 0

See Paragraph 3-150 for the HP-IB address setting and Paragraph 3-154 for the "Talk-Only" mode.

3-16. When power is cycled, "HP 3456" is momentarily displayed and then the address code is displayed.

3-17. Self Test Operation.

3-18. The 3456A's Test Operation consists of certain analog gain, offset, and digital checks when the TEST button is pressed. Make sure the 3456A's input terminals are completely floating and the GUARD switch is in the "IN" position, when selecting the test operation. The test may not pass if external connections are made to the input terminals, because certain input circuitry measurements are made. When the TEST button is pressed, the instruments displays

"+ 1.8.8.8.8.8.8. + 8."

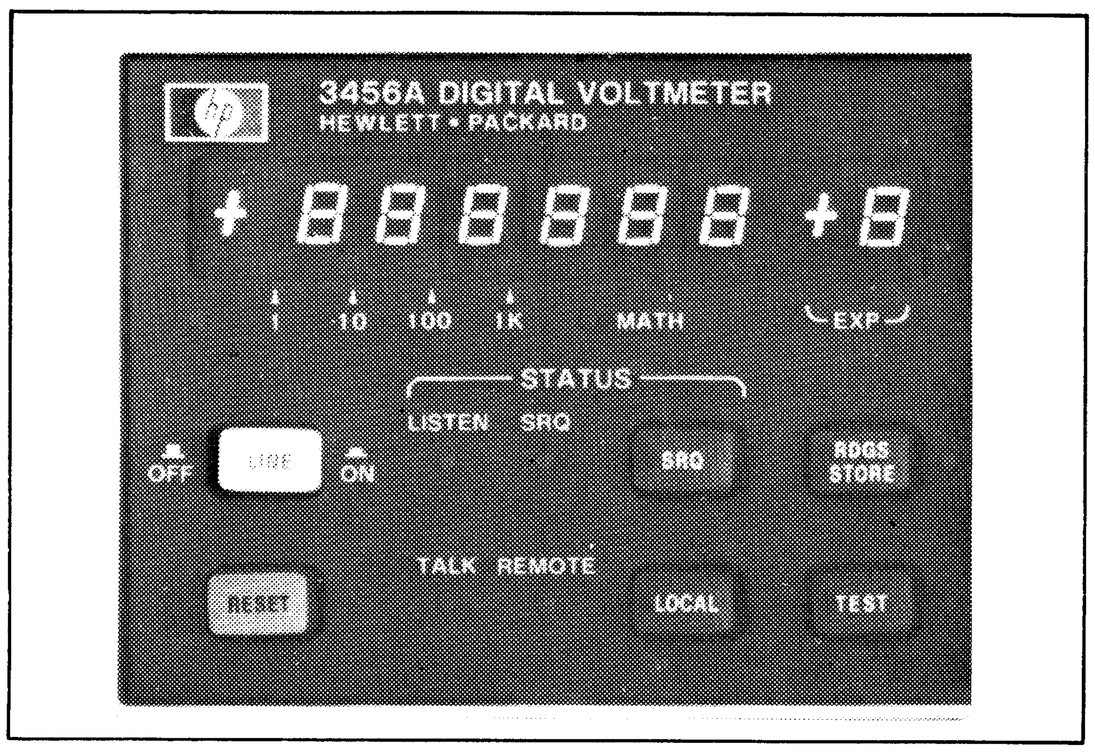

Figure 3-2. Front Panel Display Area.

and light all the front panel LEDs. This remains until the test is completed. Once the test is completed, the display and the LEDs go blank for a time and the test operation starts again. If any of the internal checks do not pass, a negative integer corresponding to the check which did not pass is displayed. The displayed number is also output over the HP-IB with the 3456A in remote. A '100'' is output when the test passes. To disable the test operation press the TEST button a second time.

NOTE

Make sure no connection is made at the 3456A's Input Terminals and the GUARD switch is in the "IN" position during the Test mode.

NOTE

Refer the 3456A to a Service Trained Person, if the Internal Test does not pass.

3-19. Display.

3-20. Refer to Figure 3-3 to see how readings are displayed. Note that the 1 V through 1000 V ranges are displayed as they are measured with the decimal point in the correct place like this:

1.00000 – 1 V Range
10.0000 – 10 V Range
100.000 – 100 V Range
1000.00 – 1000 V Range

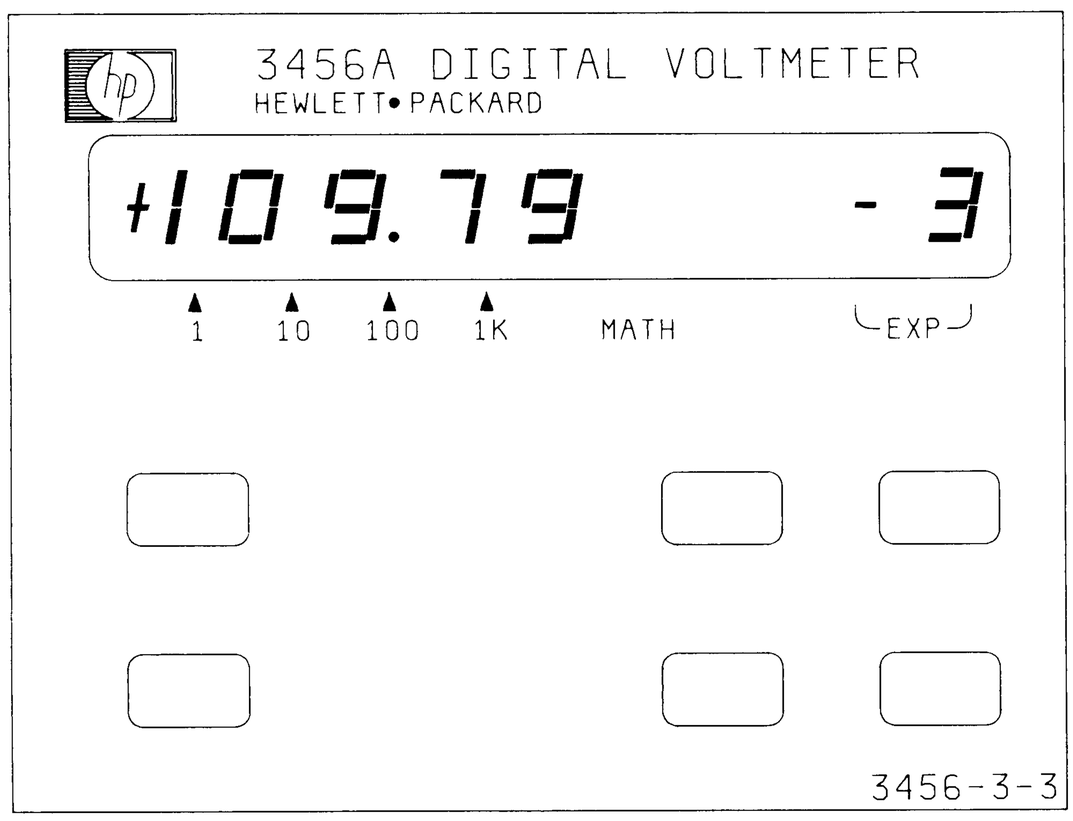

Figure 3-3. 3456A Display.

Additionally, a 1, 10, 100, and 1 K are marked on the front panel and are located below the decimal point of the respective ranges with the other ranges indicated in engineering notation. The position of the decimal point on the display marks the decade multiplier.The range is easily determined by multiplying the displayed exponent by the decade multiplier. For example:

	1	0	9 .	7	9	-3
decade multiplier →	1	10	100	1K		EXP

shows a reading of .10979 V or 109.79 mV. The decade multiplier is not used in the 3456A's Ratio and Math functions.

3-21. Error Messages.

3-22. Error Messages are displayed for invalid operating conditions. They are displayed like this:

E D

where "D" is the number indicating which error is generated. The instrument keeps displaying the Error Message until the condition producing the error is changed to a valid state. A listing of the various error messages is given in Table 3-1.

Table 3-1. Error Messages.

Error No.	Description
1	Autozero disabled in any Shifted Functions. Displayed in Remote only.
2	Analog Filter enabled in any Ohms Functions. Displayed in Remote only.
3	Any invalid Range and Function combination (Example: 10 M ohm Range selected for the DCV Function). Displayed in Remote only.
4	Attempt was made to store invalid number into a register (Example: a "9" is stored into the Number of Digits Displayed register).
5	Attempt was made to store any number into register C, M, or V.
6	Attempt was made to recall non-existent stored readings from memory.

3-23. OPERATING CHARACTERISTICS.

3-24. Refer to Figure 3-4, the front panel's Voltmeter Configuration area, for the following paragraphs.

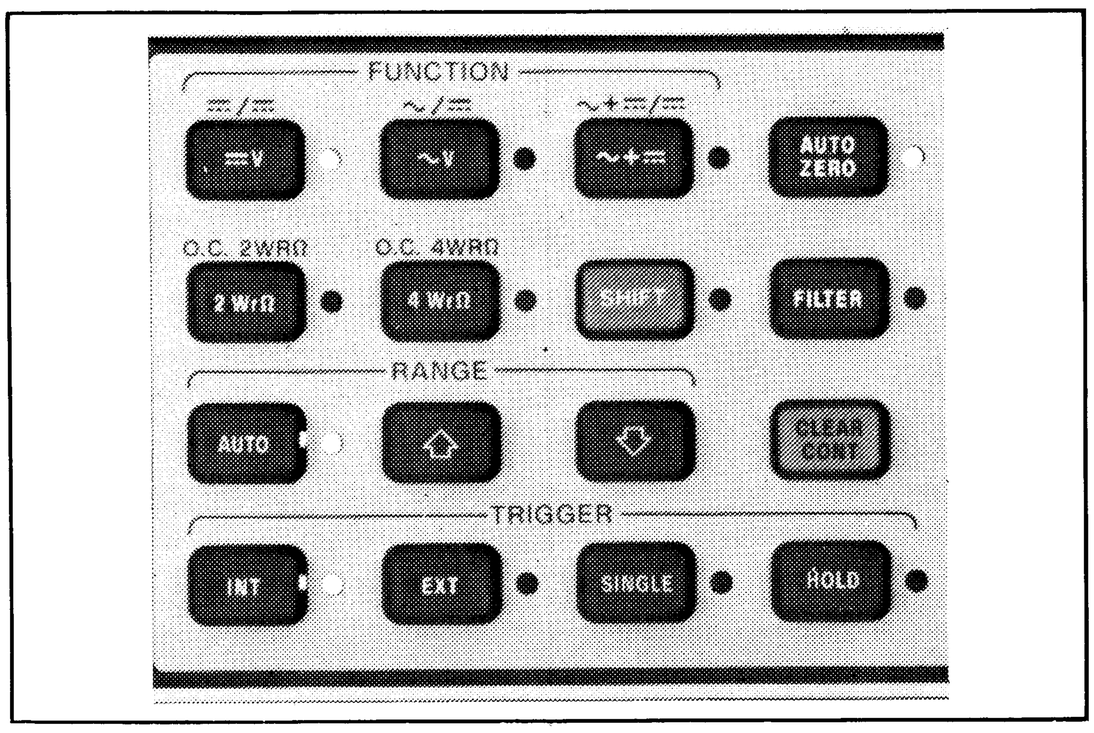

Figure 3-4. Front Panel Voltmeter Configuration Area.

3-25. DC Voltage Measurement.

3-26. The -hp- Model 3456A is capable of measuring dc

voltages from 100 nanovolts through 1000 volts in five ranges: 100 mV, 1 V, 10 V, 100 V, and 1000 V. All ranges are overload protected from input voltages up to 1000 V peak. The DCV input impedance is greater than 10^{10} ohms in the 100 mV to 10 V ranges and 10 M ohms in the 100 V and 1000 V ranges.

3-27. The measurement data can be displayed either as a 6½, 5½, 4½, or a 3½ digit reading, depending on the Number of Power Line Cycles Integrated (see Paragraph 3-61) and the Number of Digits selected (see Paragraph 3-63). Refer to Table 1-1 for accuracy specifications.

3-28. AC Voltage Measurement.

3-29. The -hp- Model 3456A uses a True RMS convertor and is able to measure voltages from 1 μV to 700 V RMS in four ranges: 1 V, 10 V, 100 V and 1000 V. All ranges are protected from input voltages up to 1000 V peak or 700 V RMS, whichever is less. Measurement data can be displayed either as a 6½, 5½, 4½, or a 3½ digit reading, depending on the selected Number of Power Line Cycles Integrated (see Paragraph 3-61) and the Number of Digits selected (see Paragraph 3-63). The frequency response of the convertor is from 20 Hz to 250 kHz with a maximum input voltage of 1000 V peak (700 V RMS, 10^8 VHz). The input impedance of the convertor is 1 M ohms shunted by < 75 pF. Refer to Table 1-1 for accuracy specifications.

3-30. AC+DC Measurement.

3-31. The AC+DC mode of the 3456A measures the combined ac and dc components of the input signal and displays its RMS value. Other operating characteristics are the same as the ACV function. Refer to Table 1-1 for accuracy specifications.

3-32. One use of the AC+DC function is to determine the necessary power rating of an amplifier. Since many amplifiers have ac signals with dc components, the true RMS value of those complex waveforms may need to be known. The AC+DC feature of the 3456A can simplify these measurements since it can measure the RMS value of the sum of the ac plus the dc voltage on the waveform.

3-33. Resistance Measurement.

3-34. The Model 3456A is capable of measuring resistance from 100 micro-ohm to 1 giga-ohm in eight ranges. The ranges extend from the 100 ohm full scale to the 1000 Meg-ohm full scale range. Resistance Measurement can be made using either the 2-wire or the 4-wire configuration. Refer to Figure 3-5 for the correct ohms connection.

3-35. Resistance Measurements can be displayed as either a 6½, 5½, 4½, or a 3½ digit reading, depending on the Number of Power Line Cycles Integrated (see Paragraph 3-61) and the Number of Digits selected (see Paragraph 3-63). The 4-WIRE ohm sense terminals are protected to a maximum level of 350 V peak. Refer to Table 1-1 for accuracy specifications.

3-36. The 3456A displays negative (minus) resistance under two conditions:

a. The inputs to the 4 WIRE SENSE (RATIO REF) or the 2WRΩ/4WRΩ (VOLTS) terminals are reversed from each other in 4-wire ohms function.

b. Small negative voltages on measuring circuitry.

NOTE

With the measuring leads shorting or when measuring small resistances, negative readings may be displayed due to offsets in the ohms circuitry.

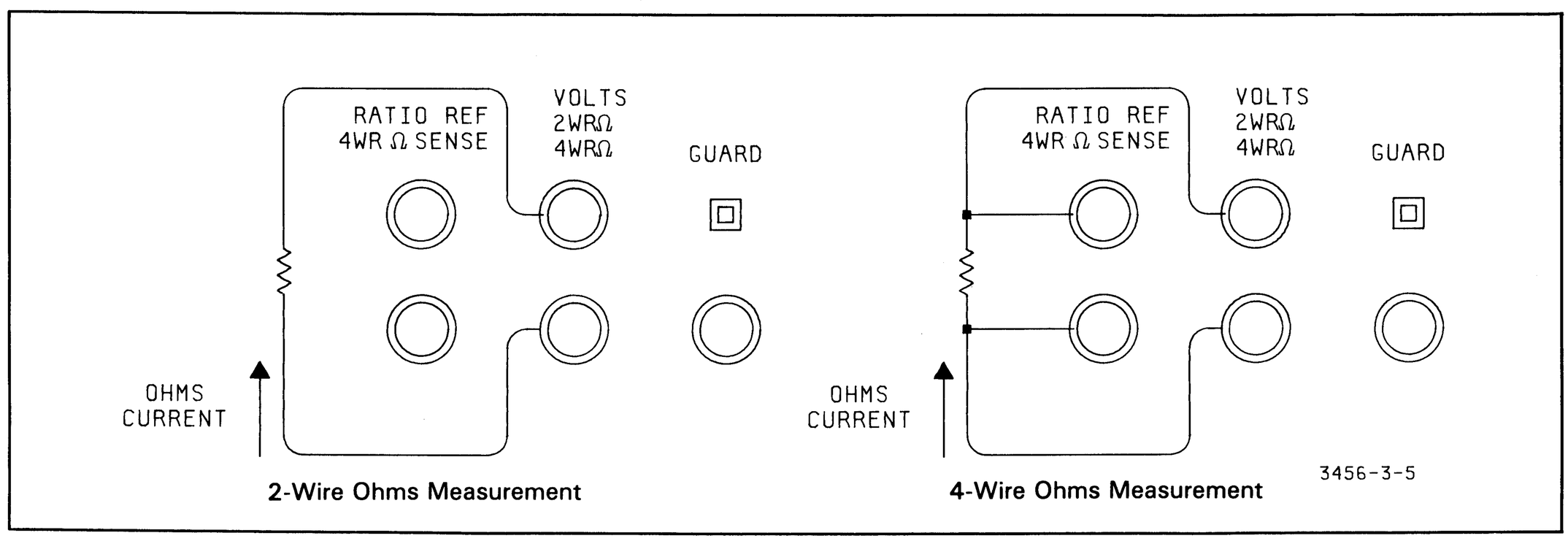

Figure 3-5. Ohms Connection.

NOTE

The 3456A's Analog Filter (see Paragraph 3-52) should not be used with any ohms functions. The filter is disabled when the ohms functions are selected from the front panel.

3-37. Shift Operation.

3-38. The purpose of the SHIFT button is to place the 3456A in the Shifted Functions. To disable the shifted functions, press the SHIFT button again. The SHIFT button's color is green and corresponds to the green lettering and symbols above the function buttons to identify shifted functions. All shifted functions readings are made by taking multiple measurements.

NOTE

The 3456A's Autozero feature (see Paragraph 3-48) is automatically enabled in front panel selectable shifted functions.

3-39. Ratio.

3-40. The -hp- Model 3456A can either make DCV/DCV, ACV/DCV, or ACV+DCV/DCV Ratio Measurements. This is done by taking a Signal, Reference High, and Reference Low Voltage reading which are all referenced to a common point, the VOLTS LOW terminal. The Signal Voltage is measured from the VOLTS HIGH terminal to the VOLTS LOW common. The Reference High Voltage is measured from the RATIO REF HIGH terminal to VOLTS LOW and the Reference Low Voltage is from the RATIO REF LOW terminal and VOLTS LOW. Refer to Figure 3-6 for a typical Ratio Measurement. Select the Ratio functions using the DCV, ACV, ACV+DCV function buttons in the shifted mode (press the SHIFT button). The green symbols above the function buttons identify the Ratio functions. Refer to Table 1-1 for accuracy specifications.

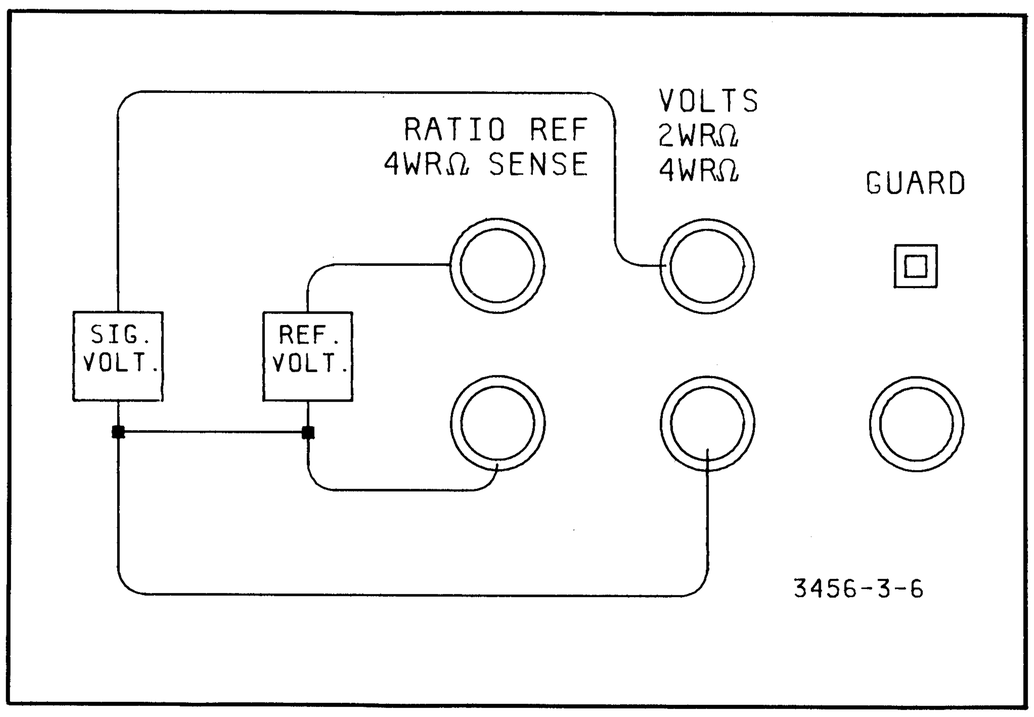

Figure 3-6. Ratio Connection.

a. Ratio Formula. A Ratio Measurement is a mathematical operation expressed in this formula:

$$\text{Ratio} = \frac{\text{Signal Voltage}}{\text{Reference Voltage}}$$

The 3456A Ratio Measurement formula is:

$$\text{Ratio} = \frac{\text{Signal Voltage}}{\text{Reference High - Reference Low}}$$

Remember, the three voltages are referenced to the VOLTS LOW terminal. The Reference Low voltage should be kept low for an accurate Ratio measurement (within ± 9% of Reference High Voltage). The voltage can be kept low by shorting or otherwise connecting the RATIO REF LOW and VOLTS LOW terminals to each other, either at the terminals or measuring point.

NOTE

For a three wire Ratio Measurement connect the REFERENCE LOW and VOLTS LOW terminals to each other.

b. Ratio Measurement. For a Ratio Measurement the Reference Voltage can be between 0 to ± 12 V dc. The 12 V level is the maximum Reference Voltage level the instrument is able to measure (the RATIO REF terminals are protected up to 350 V peak). The Signal Voltage, which is applied at the VOLTS terminals, can either be dc, ac, or ac+dc volts from 0 to 1000 V peak or 700 V RMS. In addition, the Analog Filter (see Paragraph 3-52) and Delay (see Paragraph 3-67) are not used for the Reference Measurement. These features can be selected for the Signal Voltage Measurement. The following is a typical Ratio Measurement procedure.

1. Measure your Signal and Reference Voltages and make sure they are within the range for a Ratio Measurement (refer to Table 1-1 for the limits). Use the instrument's unshifted functions for those measurements.
2. Connect the Reference Voltage between the HIGH and LOW REFERENCE terminals.
3. Connect the Signal Voltage between the HIGH and LOW VOLTS terminals and connect RATIO REF LOW to VOLTS LOW.
4. Set the 3456A to the desired range or to Autorange.
5. Place the instrument into the Ratio mode by pressing the appropriate button (DCV/DCV, ACV/DCV, or ACV+DCV/DCV in the shifted mode).
6. Read the Ratio reading on the display.

NOTE

It is important to remember that the RATIO REF LOW and VOLTS LOW terminals cannot be more than ± 12 V from each other.

c. Typical Ratio Measurement. Matching resistor values for an accurate voltage divider is one way to use the 3456A's Ratio feature. Try this by using the set up in Figure 3-7. Connect the instrument as indicated in the figure. Make sure that REFERENCE LOW is connected at the top of R2 and that Signal (Volts) Common is connected at the bottom of R1. Once the instrument is connected and placed in the DCV/DCV Ratio mode, a Ratio Measurement is made. The voltage drop across R1 and R2 is measured including any offset voltages between Signal Common and Reference Low. The offset voltage is used to compensate for any error causing voltages between the input and resistors. Once all the measurements are taken, the Ratio Measurement is displayed on the front panel. If the resistors are equal in value, the reading should be approximately "– 1.00000".

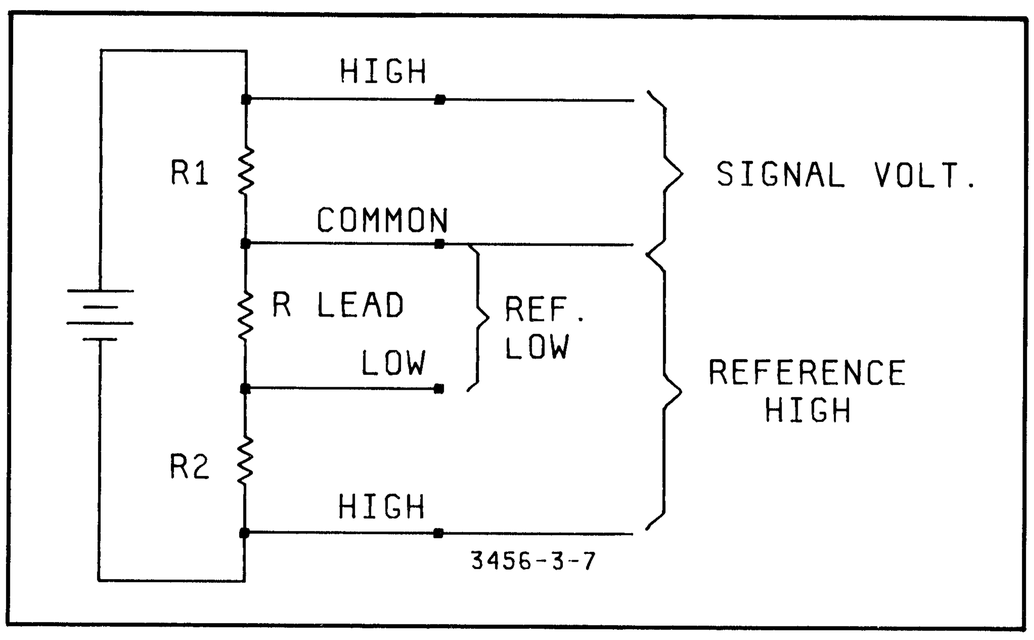

Figure 3-7. Typical Ratio Measurement.

3-41. Offset Compensated Ohms Measurement (O.C. Ohms).

3-42. This feature of the -hp- Model 3456A lets you take resistance measurements of components in the presence of small dc voltages. If this shifted function is selected, the instrument takes an ohms measurement and stores the reading into its internal memory. The ohms current source is then turned off and a dc reading is taken. This reading is subtracted from the previous reading and the resultant ohms reading is displayed on the front panel. Any small offset voltage on the measured component is compensated by the O.C. Ohms measurement. The maximum voltage level depends on the range selected (.01 V dc for the 100 ohm range, etc.). The O.C. Ohms ranges are from 100 ohm to 100 K ohm. Refer to Table 1-1 for the accuracy specifications.

NOTE

Due to internal switching in the 3456A, high capacitance(s) in parallel with the device or component being measured in the O.C. Ohms mode may cause erroneous readings.

3-43. You can use the O.C. Ohms feature of the 3456A to measure the contact resistance of a relay. Since some relay contacts may generate a small dc voltage (due to thermocouple effects), a normal ohms measurement technique may give incorrect readings. The O.C. Ohms feature subtracts this voltage from the ohms reading, and thereby gives an accurate resistance measurement of the relay.

3-44. Ranging.

3-45. The front panel range selection is controlled by three pushbuttons: the UPRANGE, DOWNRANGE, and AUTORANGE button. Their operation is as follows.

a. Uprange. The UPRANGE button's function is to set the 3456A to the next higher range, each time it is pressed. The highest selectable range depends on the function selected. For example, the 100 M ohm in the ohms function is not a valid range for the DCV or ACV functions and the 3456A defaults to the next highest valid range. The UPRANGE button is identified by an upward pointing arrow on its face.

b. Downrange. The function of the DOWNRANGE button is to set the 3456A to the next lower range, each time it is pressed. The lowest selectable range is the 100 mV or 100 ohms range. Similar to UPRANGE operation, the lowest range depends on the function. The ACV function, for example, has the 1 V range as the lowest range. If previously set to a lower range, the 3456A defaults to the 1 V range when the ACV function is selected. The DOWNRANGE button is identified by a downward pointing arrow on its face.

c. Autorange. With Autorange selected, the 3456A automatically selects the present reading's optimum range. Upranging is done when the reading is at or above 120% full scale. The downrange point is at or below 11% full scale. Try the following.

1. Place the 3456A into the Autorange mode; use a variable power supply and apply 1.0 V dc to the input. The range selected by the instrument is the 1 V range.

2. Increase the input voltage to > 1.2 V; the 3456A should then uprange to the 10 V range.

3. Decrease the input voltage to < 1.1 V; the instrument should then downrange back to the 1 V range.

d. Fast Autorange Feature. Autoranging by the 3456A is done quickly in both the upranging and downranging operations.

1. Upranging. When a voltage applied to the 3456A's input is higher than the range used at that time, an overload condition is detected. The overload condition is detected before the input measurement is complete. Upranging is done until the overload condition disappears and the optimum range is reached. Since the total measurement is never completed until the optimum range is reached, upranging is fast.

2. Downranging. Downranging is also done quickly by using a different method. When a non-overload measurement is made, the 3456A takes a complete measurement. Once the measurement is completed, the instrument then calculates the optimum range from the reading. A maximum of three ranges can be skipped at one time, enabling the 3456A to downrange quickly.

3-46. Instrument Trigger Modes.

3-47. The -hp- Model 3456A has four trigger modes: Internal Trigger, External Trigger, Single Trigger, and Hold. A description of each mode is as follows.

a. Internal Trigger. This trigger is internally generated by the 3456A and is used to initiate a measurement cycle. The instrument is placed into the Internal Trigger mode by pressing the INT (Internal Trigger) pushbutton located on the front panel. This trigger is also automatically selected when the RESET button is pressed and at turn on.

b. External Trigger. In the External Trigger mode, the instrument can be triggered by an externally applied trigger pulse. The pulse is applied to the External Trigger Input connector located on the rear panel and should be at least 500 nsec wide. The External Trigger Input is TTL compatible with actual instrument triggering occurring on the falling (negative) edge. By application of the pulse, the 3456A triggers and initiates a measurement cycle. After this cycle is completed, the instrument can be triggered again for a new cycle. If any triggering is done during the measurement cycle, the trigger is ignored until the cycle is completed. To start a new measurement, the 3456A has to be triggered again.

c. Single Trigger. The Single Trigger operation is similar to the External Trigger operation with triggering being accomplished by the front panel's SINGLE trigger pushbutton. Depressing the button first places the 3456A into the Signal Trigger mode (if the 3456A is in another trigger mode) and then triggers the instrument. A measurement cycle is then initiated. If the pushbutton is pressed again during the cycle, a new measurement cycle is started. The 3456A can be triggered again by depressing the SINGLE trigger pushbutton.

d. Hold. The Hold operation prevents the 3456A from accepting locally generated trigger commands, although an HP-IB trigger is accepted. Refer to the Remote Operation paragraphs for additional information on the HP-IB trigger.

3-48. Autozero.

3-49. The Autozero feature of the -hp- Model 3456A is used to compensate offsets in the dc input amplifier circuit of the instrument. Its main purpose is to correct for any zero drift in circuitry which may cause errors. The method used is to short the amplifier's input to circuit ground and take its offset reading. The reading is then stored in the instrument's internal memory and is later used to correct the following input measurement(s). Once the offset reading is taken, the short is removed and a regular input measurement is taken. As long as the Autozero feature is enabled, the 3456A takes an Autozero measurement and an input measurement. When the feature is disabled, an Autozero measurement is taken and is immediately stored into memory. No new Autozero measurements are made for the successive readings; only an input measurement is made. The stored Autozero reading is subtracted from the input measurement to correct the reading. Since only the input measurement is made, the 3456A's reading rate increases. This also makes the instrument more suitable for making measurements on high impedance circuitry, since no input switching is done. The 3456A's long term stability is affected (see Table 1-1) with the disabled feature, unless the Autozero reading is updated. Updating is done when any change in instrument state occurs. The only exception is that no updating is done by triggering, Front Panel SRQ, and HP-IB Local commands. The Autozero feature is enabled when the 3456A is first turned on and when pressing the RESET button.

3-50. Autozero Effects on 4-Wire Ohms Measurement.

3-51. The Autozero measurement is normally made with the input amplifier shorted to circuit ground. In the 4-Wire Ohms mode, the input amplifier is shorted to the 4-WRΩ SENSE Low terminal for the Autozero Measurement. With Autozero "ON", the Autozero reading is updated for each measurement cycle. With Autozero "OFF", the reading is not updated and causes an ohms measurement error if the measuring lead's impedance changes. To prevent this error, a new Autozero reading should be taken by changing or updating instrument state with the new measuring lead configuration. A disabled Autozero is useful in ohms measurements for a faster reading rate and where the 3456A's input switching may have affected the measurement.

3-52. Analog Filter.

3-53. The 3456A's Analog Filter is a 3 pole active filter with greater than 60 dB attenuation at frequencies of 50 Hz and higher. The filter is normally applied between the instrument's input terminals and input amplifier. An exception is when the 3456A is in the ACV or ACV + DCV unshifted or shifted functions. The filter is then applied between the output of the ac convertor and the input amplifier. In these modes, select the filter for accurate measurements below 400 Hz. Refer to Table 1-1 for the ACV and ACV/DCV accuracy specifications with the filter in or out. The Analog Filter is enabled (or disabled) by pressing the FILTER button.

3-54. NUMBERED KEYBOARD OPERATIONS.

3-55. Refer to Figure 3-8 for the 3456A's Numbered Keyboard selectable operations.

3-56. Storing Into Registers.

3-57. The next paragraphs explain the Number of Power Line Cycles Integrated, Number of Readings per Trigger, Settling Delay, and a variety of math operations. Except for math, other operations are changed by storing numbers into appropriate registers. The math operations are selected by pressing the appropriate math key. Table 3-2 gives a short description of the registers and math operations.

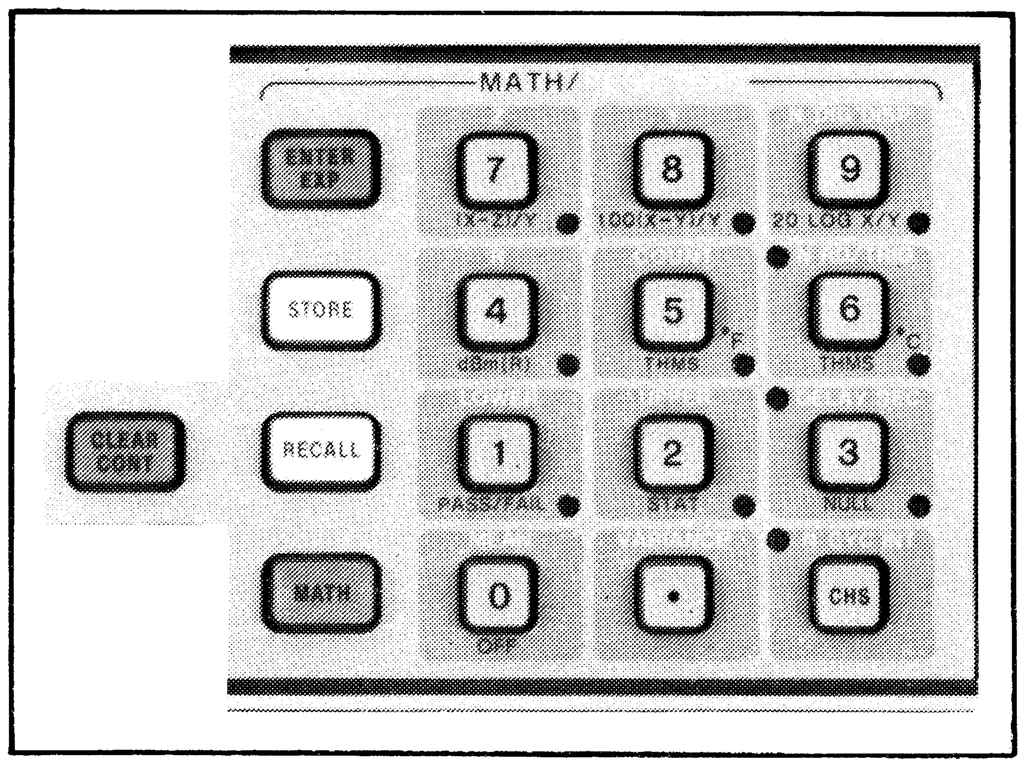

Figure 3-8. Front Panel Numbered Keyboard Area.

3-58. The Numbered Keyboard is very similar to those in pocket calculators with some keys performing more than two functions. Refer to the front panel. Note that the differences in key color, and the labeling above and below the keys determine the key's function. The blue color identifies the math operation, the white color identifies registers, and the black color identifies numbers, decimal point, and polarity. The white and blue color buttons located to the keyboard's left corresponds to the math and register operations.

3-59. Various LEDs on the keyboard annunciate which math function has been selected and which register contains a non-default number. For example, the LED next to the PASS/FAIL label lights if you select this math operation.

3-60. Storing numbers into registers:

a. Store. Numbers stored into registers changes the instrument's operation. For example, select the 100 Power Line Cycles Integrated mode (10 Line Cycles is the default value). To do this, "100" has to be stored into register N CYC INT. Try the following procedure.

1. Press the "1" key and the "0" key twice. These keys are on the Numbered Keyboard.

2. A "100" should now be displayed on the front panel.

3. Next press the white STORE button and then the CHS key (note, the white label above the CHS key is N CYC INT). The CHS key, which is normally the Change of Sign key, becomes the N CYC INT register key when the STORE button is pressed. (The CHS key is normally used to change the polarity of a number which is typed in from the keyboard, before storing into a register.)

4. The 3456A is now set to 100 Power Line Cycles Integrated. Use the same method to store numbers into the other registers.

Using this method you can select a six digit number (and a "1" as the overrange number) of any value and store it into a register. When a number is entered from the keyboard, the number is displayed before it is stored into a register. There is one important thing to remember when storing numbers. Some registers only accept certain numbers. The N DIG DISP (Number of Digits Displayed), for example, only accepts either a 3, 4, 5, or 6, since these are the only number of digits the 3456A can display. If you try to store an illegal number, Error 4 will be displayed.

NOTE

Since only a six digit number and overrange number can be entered, any additional numbers will be ignored.

b. EXP (Exponential). There are two ways to store numbers into registers using the Numbered Keyboard, Fixed Point and Floating Point. One way is to enter a number digit by digit and the other way is using the EXP (Exponential) key. A digit to digit entry looks like this: Enter "2". "0", "0", "0" to display "2000"

or

Enter "." "0", "2" to display ".02"

To enter the same numbers using the EXP key, first enter all of the number's significant digits and then press the ENTER EXP button. Once this is done, the displayed number is then stored into the desired register. The exponent can also be changed from a "+" to a "-" by pressing the CHS key. This is done before or after you enter the exponent and after pressing the ENTER EXP key. To enter "2000", do this:

Enter "2", press ENTER EXP key, and enter "3" displaying "2 +3". The same as "2000"

To enter the number ".02" do this:

Enter "2", press the ENTER EXP button, enter "2", and press the CHS key displaying "2 -2". The same as ".02"

Table 3-2. Registers and Math Listing.

Key	Register	Registers Default Values	Description
CHS	N CYC INT	10	Used for changing and determining the Number of Power Line Cycles Integrated
.	VARIANCE	-00.000-3	Used for storing the varience value determined from Statistics Math Operation
0	MEAN	199999+9	Used for storing the Mean Value determined from the Statistics Math operation.
1	LOWER	-1999999+9	Used for storing the lower value for the Pass/Fail Math operation or the lowest reading taken in the Statistics Math operation.
2	UPPER	1999999+9	Used for storing the upper value for the Pass/Fail Math operation or the highest reading taken in the Statistics Math operation.
3	DELAY SEC	0	Used for changing and determining the 3456A's Settling Delay.
4	R	600	Used for storing the resistor value for the dBm Math operation or for recalling readings taken in the 3456A's Reading Storage mode.
5	COUNT	0	Used for storing the number of readings taken while in the Statistics Math operation.
1	N RD/TRIG	1	Used for changing and determining the Number of Readings taken or are to be taken per Trigger.
7	Z	0	Used for storing a number value for the Scale Math operation and stores the first statistics Reading.
1	Y	1	Used for storing a number value for the Scale and %Error Math operation.
9	N DIG DISP	5	Used for changing and determining the 3456A's Number of Digits Displayed.
	Math		
CHS	–		
.	–		
0	OFF		Disables Math operation.
1	PASS/FAIL		Used to determine if a reading(s) is within set limits.
2	STATS		Used to calculate the Mean, Variance, Upper, Lower, and Count of a reading(s).
3	NULL		Used for offset compensation of the following reading(s) taken.
4	DBM		dBm calculation.
5	THMS F		Used in calculating a Thermistor reading(s) in degrees Fahrenheit.
6	THMS C		Used in calculating a Thermistor reading in degrees Celsius.
7	(X-Y)/Y		Used for the Scale calculation.
8	100 (X-Y)/Y		Used for the %Error calculation.
9	20 LOG X/Y		Used for the dB calculation.

NOTE

Pressing the EXP key before entering a number will display 1 + 0.

c. Recall. Any of the Registers can be recalled at any time. By pressing the RECALL button and the key for the Register to be displayed. (Remember, the registers are in white.) The Register's value is then displayed on the front panel.

d. Clear-Continue. The CLEAR-CONTINUE button, when pressed, clears the display and continues with the previous operation. This can be useful when accidently entering an incorrect number from the keyboard. The Clear-Continue feature clears the incorrect number and starts a new measurement cycle. This feature can also be used when a register is recalled and no changes in the register are desired.

3-61. Number of Power Line Cycles Integrated.

3-62. This feature of the -hp- Model 3456A allows you to select the integration time from .01 to 100 power line cycles in multiples of 10. Since a power line cycle of "1" has a time period of 1/60 second, 1/50 for the 50 Hz option, the intergration time is 1/60 or 1/50 second. The Number of Power Line Cycles Integrated determines measurement time. The slowest integration time of the 3456A is 100 Power Line Cycles Integrated and the fastest is .01 line cycles. For good power line frequency noise rejection (Normal Mode Rejection), use integration times of either 1, 10, or 100 power line cycles. Use the Store method in Paragraph 3-60 to select the various integration times (Number of Power Line Cycles). The default value of the Number of Power Line Cycles Integrated is 10 (at Turn-on and Reset).

3-63. Digits Displayed.

3-64. The 3456A can display either a 3, 4, 5, or 6 digit reading. Select any of these digits using the Store method in Paragraph 3-60. The Number of Power Line Cycles Integrated determines the maximum number of digits the 3456A can display. If the 1 to 100 Power Line Cycles Integrated are used, the 3456A can display from 3 to 6 digits. With .01 Integration Time the maximum number of digits then is 4 and with .1 Line Cycles Integrated the maximum is 5. Five is also the number of digits displayed at Turn-On or when the RESET button is pressed.

3-65. Number of Readings per Trigger.

3-66. The Model 3456A is capable of taking from 1 to 9999 Readings per Trigger. Selection of the Number of Readings per Trigger is accomplished by using the Store method in Paragraph 3-60. The selected number of readings are executed each time the instrument is triggered. Although the Internal, External, and Single Trigger modes will take the selected number of readings, it may be advantageous to use the External or Single Trigger modes. Using these modes, if a Single Trigger is sent the 3456A starts taking the readings and stops when all the readings are taken. Another trigger repeats the same operation. An Internal Trigger also does the same thing, but automatically triggers again when all readings are taken. The default value of the Number of Readings per Trigger at Turn-On or at Reset is "1".

3-67. Settling Delay.

3-68. This feature of the -hp- Model 3456A can be used to delay the 3456A's input measurement for a preselected time, before a measurement cycle (A/D operation) is started. The amount of Settling Delay is selected by using the Store method in Paragraph 3-60. In some modes (ACV, OHMS, and Analog Filter), a delay value is selected by the instrument. These selected delays are defined in Table 3-3 and can be changed to another value by using the Store method. Any number value from .001 second to 999.999 seconds (including 0) can be chosen for a delay in any mode. To return a 3456A selected delay to its default value store any negative number into the DELAY register.

Table 3-3. Default Delays.

3456A Set-Up Condition	Delay (in second)
DCV, Filter On	.650
ACV or ACV + DCV, Filter Off	.060
ACV or ACV + DCV, Filter On	.800
Ohms, 100 K Range	.001
Ohms, 1 M Range	.008
Ohms, 10 M Range	.080
Ohms, 100 M Range	.080
Ohms, 1 G Range	.080

3-69. Optimizing the Reading Rate.

3-70. The previous paragraph stated that the Number of Power Line Cycles Integrated has an effect on the Number of Digits displayed. In addition to that, the measurement accuracy and power line frequency noise rejection (NMR) are also affected. You can select a faster reading rate with a low Number of Power Line Cycles Integrated. But keep in mind that the 3456A's measurement error increases and that the ability to reject power line frequency noise rejection is lessened. Table 3-4 gives some ideas on how to optimize the 3456A's reading rate.

3-71. MATH FEATURE.

3-72. A variety of math operations can be done by the Model 3456A. Use the instrument's Numbered Keyboard to select a math operation and to enter values into registers used by the math operations. Refer to the Numbered Keyboard for the following discussion and make sure you know how to store values into registers

Table 3-4. Optimizing Reading Rate.

Your maximum reading rate with the 3456A is influenced by a large number of factors, not the least of which is the signal you are trying to measure. These factors can be divided into two categories; signal related and voltmeter related. Among signal related factors are:

- desired accuracy (or resolution)
- nature of the signal (dcv, acv, or ohms)
- signal environment (line related and broadband noise)

Among voltmeter related factors are:

- method of measurement transfer (Packed Output, Reading Storage, System Output)
- number of convenience features selected (Math operations, Autorange)

For all operations, an equally important consideration is what you're trying to accomplished by measuring fast. Are you

- scanning a large number of points so that faster readings mean a better picture of what is happening at a single point in time?
- trying to read fast so that you do not use up valuable computer time waiting for the measurement operation to complete?
- trying to digitize waveforms?

The 3456A can solve these application problems in many different ways.

AT TURN-ON

For most bench and system applications, the preprogrammed settling times assure accurate readings regardless of the signal and signal environment. However, knowledge about your signal and/or signal environment can let you achieve up to 330 rds/s (at 60 Hz) with noise rejection and 10 microvolt sensitivity.

YOUR SIGNAL ENVIRONMENT

Your signal is subject to line related and broadband noise which can interfere with the measurement. There are two ways of rejecting noise on the 3456A; integration and input filtering.

Integration is a process where the affect of line related noise is averaged to zero over the period of an integer number of Power Line Cycles (PLC) during the A to D conversion. The basic integrator is an Op Amp with a (integrator) capacitor in its feedback loop. The signal is connected to the input of the Op Amp for a period of the line frequency. This configuration theoretically provides infinite noise rejection at integer multiples of the inverse of the integration period and single pole roll-off (20 dB of amplitude attenuation for every decade increase in frequency above the knee frequency) for broadband noise. Refer to the graph for more detail.

The input filter provides excellent noise rejection. The price you pay is an additional 650 ms settling time which allows the filter output to settle to a final value before the input is measured. The fastest possible reading rate measuring widely varying signals with line rejection is provided by 1 PLC integration time. But, if you are looking at a slowly varying signal or scanning similar signals, you can get faster readings by overriding the preprogrammed settling time selecting 0.01 or 0.1 PLC integration time and the filter. The trade-off is less accuracy and resolution as well as more uncertainty about the filtered input.

SPEEDING THE MEASUREMENT CYCLE

The thermal stability of the measurement environment is important. By simply keeping the temperature of the 3456A at a fixed value, you can nearly double the reading rate by turning Auto Zero off. The 3456A is slightly less accurate but the faster reading rate may be worth it. In addition, any range, function, or filter change that takes place is automatically accompanied by an Auto Zero update which removes any accumulated offsets. Of course, if the measurement environment is quiet enough to omit NMR then only the accuracy and resolution of your desired measurement are the factors and you can achieve up to 210 or 330 rds/s with .1 and .01 PLC respectively (60 Hz).

Further, you can speed the measurement cycle by selecting a fixed range instead of using the Autorange function. Even at 1 PLC integration time there is a 10% reduction of the reading rate with Autorange on. Of course, if your signal is changing, Autorange is far faster than letting your software range the 3456A over the HP-IB.

AC Volts requires some special attention. With the filter off, you can measure signals of greater than 400 Hz frequency at a rate of 12 rds/s with the preprogrammed settling time of 60 ms. If you are monitoring a slowly changing ac signal or scanning similar signals, you can minimize the settling time to achieve up to 330 rds/s. Keep in mind that the input could change drastically before your readings would indicate a large change.

For signals of less than 400 Hz the input filter is connected in series with the ac converter to slow the signal response to the A to D converter. Again, you can override the preprogrammed settling time of 800 ms but beware! Large changes in the input signal level may let you read numerous wrong readings while the ac converter and the input filter are settling to a final value.

The 3456A can read resistance measurements as fast as dc volts up to the 10 K ohm range, but you can not use the input filter. Above the 10 K ohm range, additional settling time is required for stable resistance measurements. If all you want is an indication of the actual resistance above 10 K ohm, you can override the preprogrammed settling times. However, just considering the size of the resistance you are trying to measure and any associated stray capacitance in the measuring circuit, you may want to add settling time between reading for best accuracy.

Offset Compensated Ohms is very slow (10 rds/s) by comparison with a standard ohms measurement. But, for a single input reading, it is the fastest way to measure low value resistances accurately in the presence of thermally generated voltage offsets.

Before leaving the topic of Speeding the Measurement Cycle, it is important to ask why you would use 100 or 10 PLC integration times. The answer is increased accuracy and reduced internal noise. If you really need all the accuracy and repeatability you can get, the 100 PLC is the place you want to be.

SPEEDING THE READING TRANSFER

You might make many accuracy compromises to attain an acceptable reading rate and still not be able to read as fast as you could. Why? Because you have not optimally handled the transfer of data over the bus from the 3456A to your computer.

Let's take a closer look at the reasons for fast reading rates:

Table 3-4. Optimizing Reading Rate (Cont'd).

- High speed scanning
- Data Throughput
- Waveform Characterization

HIGH SPEED SCANNING

Typical applications of high speed scanning include temperature and strain profiling where a large number of measurements must be taken very quickly to "freeze" the phenomenon at some point in time. For this type measurement, data transfer from the voltmeter to the computer is not really required to go fast. As long as the scanner data does not exceed 350 measurements, the built-in memory can store all the measurements for one scanned sequence and transfer the data at the end of acquisition. In conjunction with Reading Storage, three other 3456A features make high speed scanning particularily easy to do:

- Program Memory
- Voltmeter Complete
- External Trigger

Program Memory can be used to store a series of measurement sequences and operate on the acquired data. For example, in a high speed scanning situation you could acquire the measurements as fast as possible in the Reading Store mode. Flag the computer and then output the data, perhaps already scaled, in ASCII format. It is almost a 10 to 1 savings in time during acquisition and the results are just as easy to use as if you load, acquire, and transfer individual readings. Voltmeter Complete can be used to increment the scanner sequentially without software interaction between the voltmeter, the scanner, and the computer.

To close the loop, the scanner can output a signal to the 3456A's internal trigger. The result is that once the measurements are initiated by your computer there is no additional need for computer interaction until the measurement sequence is complete.

The fastest possible reading rate for any integration time is achieved when:

- Autorange, Auto Zero, Math, Display and Filter are off.
- Measurements are stored in the built-in memory using internal trigger and the packed format mode.

Since the packed mode and Display off are functions only available over the HP-IB, the maximum reading rate is achievable only with remote operation. If your trigger source is fast enough, external triggering is just as fast as internal triggering.

Transferring the measurements in packed format over the bus to a 9825A Calculator using a Fast Read/Write Buffer transfer reduces the maximum reading rate by 10% and you have to unpack the stored data. But, you can store many more measurements using the computer's memory.

DATA THROUGHPUT

The 3456A solves many of the data throughput problems because Reading Store and Program Memory remove the constant control necessity from the computer. The ability to flag the computer from the front panel of the 3456A, store measurement sequences in its memory, and flag the computer when it is done, lets you use both the 3456A and the computer to their best advantage. To avoid overrunning the computer with data from the 3456A, you can select the Systems Output mode which updates the output only after handshake.

WAVEFORM CHARACTERIZATION

The 3456A can digitize sinewaves up to about 100 Hz with fairly good accuracy. All the high speed modes must be used to acquire at least two samples per cycle. The Delay generator gives you about 1% timing accuracy.

Waveform characterization should be performed with a System Voltmeter. These voltmeters use a sample and hold technique which allows the waveform to be "frozen" at a well-defined point in time. An integrating-type voltmeter, like the 3456A, will always average the waveform over its integration period giving less accurate results. System voltmeters also typically have higher speed, greater bandwidth, and much more precise delay generation.

To summarize, let's look at the fastest reading rate set up again. Note that all convenience and accuracy features are eliminated and that the data is stored internally in the packed mode. This may not be right for your use. You may want a final answer which the Math functions could provide without computer interaction.

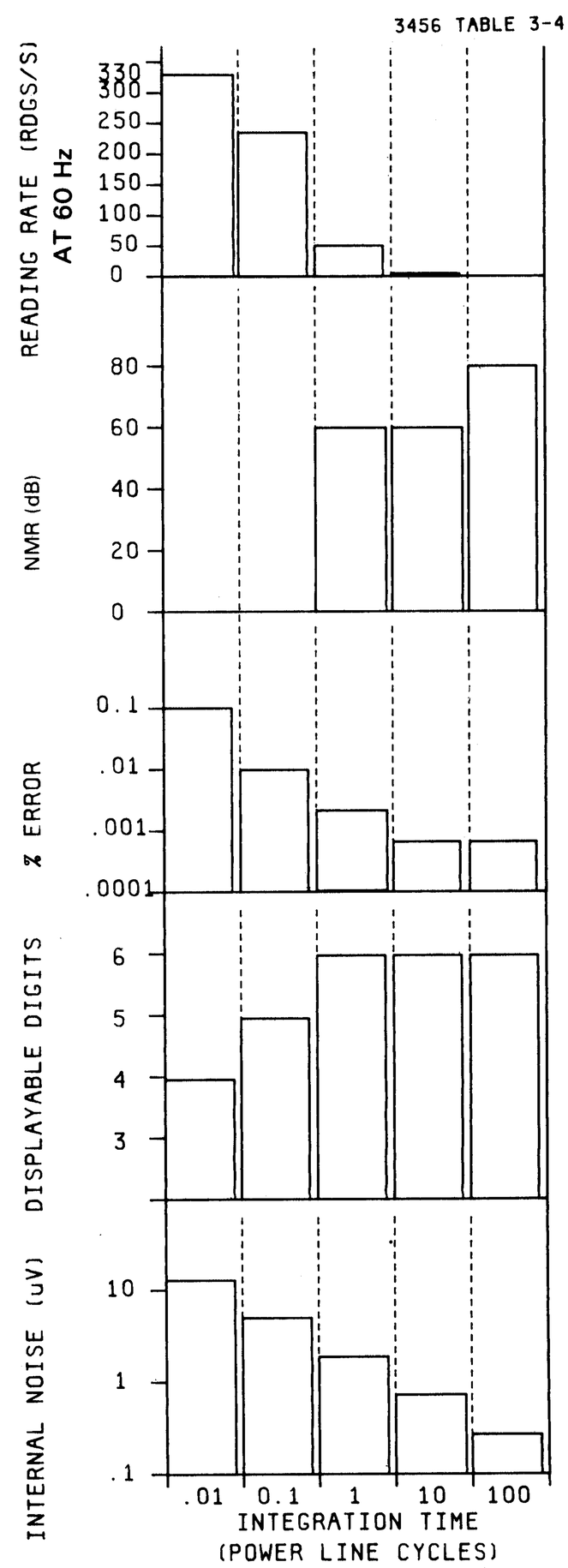

(read Paragraph 3-56). Figure 3-8, the Numbered Keyboard figure may also be helpful for the following discussion of the math operation. They are:

- %Error
- Scale
- Pass/Fail (Limit Test)
- dB
- dBm
- Null
- Thermistor
  - in Degrees C
  - in Degrees F
- Statistics
  - Mean
  - Variance
  - Count
  - Limits

3-73. Math operations can only be done on instrument acquired measurement data.

3-74. A Math operation is selected by first pressing the front panel's blue MATH button and then pressing the desired math key. The blue label below the front panel's numbered keys shows the various math operations. An LED, located to the center and below the display also lights when a math operation is selected. The registers used in the math operations are identified by the white labels above the numbered keys. The range of numbers you can store into the registers or use in math is from $\pm$ 0.000000 x 10^{-9} to 1999999 x 10^{9}. The 3456A does, however, do internal calculations using 9 digit floating point numbers. If any of the math calculations are out of range, an "LL" is displayed. The following describes the 3456A's math operations.

3-75. %Error.

3-76. The %Error math feature of the 3456A can best be described by the formula:

$$\text{Results in percent} = \frac{X - Y}{Y} \times 100$$

where "X" is the present measurement value and "Y" is the value in register Y. This formula gives the percent difference between the reading taken by the 3456A and the value in register Y. The default (Turn-On or Reset)) value in register Y is 1. The %Error feature is selected by the "8" [100 (X - Y/Y)] key. Refer to Table 1-1 for the %Error accuracy specifications.

3-77. You can use the %Error function to determine the percent difference between an ideal voltage and a measured voltage. For example, you may wish to know the %Error of a 10 V dc measurement. The first thing to do is to store 10 into register Y. Then set the 3456A to the %Error math function and take a 10 V measurement. If the reading is exactly 10 V a "0" is displayed. If the reading is, for example, 10.1 V, the result becomes:

$$\text{Result} = \frac{X - Y}{Y} \times 100 = \frac{10.1 - 10}{10} \times 100 = .01 \times 100 = 1$$

showing that the measured value is 1% higher than the ideal value. The number displayed on the front panel would be "1".

3-78. Scale.

3-79. The Scale feature of the -hp- Model 3456A lets you modify a measurement value by a selected value. The modification can be done either by addition, subtraction, multiplication, or division, depending on how the Scale function is used. The Scale mode is represented by the formula:

$$\text{Results} = \frac{X - Z}{Y}$$

where "X" is the present measurement value, "Y" is the value in register Y and "Z" is the value in register Z. The default (Turn-On/Reset) values in register Y and Z are 1 and 0, respectively. The Scale math feature is selected by the "7" [(X - Z)/Y] key. Refer to Table 1-1 for Scale accuracy specifications.

3-80. To do an addition or a subtraction, first enter a "1" into register Y. If you wish to perform an addition, enter a negative number into register Z. If a subtraction is desired, enter a positive number into register Z. The Scale formula then becomes:

$$\text{Results} = \frac{X - (\pm Z)}{1} = X - (\pm Z)$$

To perform a division, enter a "0" into register Z and the divisor value into register Y. The Scale formula then becomes:

$$\text{Results} = \frac{X - 0}{Y} = \frac{X}{Y}$$

Multiplication is performed by dividing the measured value by the inverse of the multiplier value (a fraction). Here again, a "0" is to be entered into register Z with the inverse value going into register Y.

3-81. Pass/Fail (Limit Test).

3-82. The Pass/Fail math operation can be used to make a voltage or ohms measurement and to then determine if the reading falls within certain limits. The limits are selectable from the 3456A's front panel and should be stored into the instrument's UPPER and LOWER registers. Once the limits are stored and the Pass/Fail math operation is selected, the 3456A can then be set for a regular volts or ohms measurement. If the measured

reading is within the selected limits, the reading will be displayed. If the reading is above the upper limit, "HI" will be displayed. If the reading is below the lower limit, "LO" will be displayed. The default (Turn-On/Reset) values of the UPPER and LOWER registers are + 1999999+9 and −1999999+9, respectively. The Pass/Fail feature is selected by the "1" (PASS/FAIL) key. Refer to Table 1-1 for the Pass/Fail accuracy specificaitons.

3-83. A way to use the Pass/Fail feature, is to make sure that a certain number of 1 K ohm resistors are within a 1% tolerance. To do this, you first should store the upper and lower accuracy limits into the 3456A's respective registers. In this case "1010" is stored into the UPPER register and a "990" is stored into the LOWER register. The next step is to select the ohms function and the 1 K ohms range. After you have done this, select the Pass/Fail math feature and start to measure the resistors one at a time. If the resistor value is within the 1% tolerance, in other words between 1.01 K ohms and .99 K ohms, the actual value of the resistor will be displayed on the front panel. "HI" will be displayed for any readings above 1.01 K ohms and "LO" will be displayed for any readings below .99 K ohms.

3-84. dB.

3-85. This feature of the 3456A is a Ratio Measurement of two voltages which is calculated and displayed in Decibels (dB). The dB formula is:

$$dB = 20 \text{ Log} \left| \frac{X}{Y} \right|$$

where "X" is the present measurement value and "Y" is the value in register Y. The default (Turn-On/Reset) value in register Y is 1. The dB feature is selected by the "9" (20 LOG X/Y) key. Refer to Table 1-1 for the dB accuracy specifications.

3-86. You can use the dB feature to measure the voltage gain of an amplifier. First measure the input voltage to the amplifier and store it into register Y. (You can store the reading directly into Y without re-entering the reading from the keyboard.) For this example a voltage reading of .1 V is assumed. The next step is to measure the amplifier's output voltage and set the 3456A to the dB math operation. The gain of the amplifier is then displayed in decibels. Assuming that the amplifier's output voltage is 10 V, the dB equation becomes:

$$dB = 20 \text{ Log } \frac{X}{Y} = 20 \text{ Log } \frac{10}{.1} = 20 \text{ Log } 100 = 40$$

giving you a gain of 40 decibles.

3-87. dBm.

3-88. The dBm feature of the 3456A is used to calculate a power ratio using a resistance as the reference. The dBm equation is:

$$dBm = 10 \text{ Log} \left| \frac{X^2/R}{1 \text{ mW}} \right|$$

where "X" is the present measured value, "1 mW" is the power reference, and "R" is the resistance reference value to be entered by you. The default (Turn-On/Reset) value in register R is 600 ohms. The dBm math feature is selected by the "4" [dBm (R)] key. Refer to Table 1-1 for the dBm accuracy specifications.

3-89. The dBm feature can be used to measure the input power of a speaker. In this example we assume an 8 ohm speaker load and an input voltage of 10 volts. The formula now becomes:

$$dBm = 10 \text{ Log} \left| \frac{100/8}{.001} \right| = 40.97$$

giving you a value of 40.97 dBm.

3-90. Null.

3-91. The Null feature of the 3456A is described by the formula:

$$\text{Displayed Results} = X - X_1$$

where "X_1" is the first measurement taken after the Null feature has been selected and where "X" is the reading(s) after the first reading. When the "X_1" reading is first taken it is stored into register Z. That reading is then subtracted from the following reading(s) with the net present result displayed on the front panel. Since the first reading is stored in register Z, you can recall its value by recalling the register. The Null math feature is selected by the "3" (NULL) key.

3-92. The Null feature can be used to make more accurate 2-Wire Ohms measurements. To do this, short the input leads together at the measuring point and place the 3456A into the Null and 2-Wire Ohms mode. The first reading taken, which is the lead resistance, is stored into register Z. Remove the short from the input leads and take the unknown resistance measurement. The displayed reading is the total resistance measurement minus the lead resistance, giving you an accurate 2-Wire Ohms Measurement. The Null formula becomes.

$$\text{Unknown Resistance} = X - X_1 = X - R$$

where "X" is the total unknown resistance (including "R") and where "R" is the lead resistance.

3-93. Thermistor.

3-94. The 3456A makes temperature measurements using an externally connected thermistor, when selecting this mode. To correctly do this operation, set the 3456A

to the ohms function. It is advisable to first select an ohms range which corresponds closely to the resistance value of the thermistor for the temperature to be measured. When the Thermistor operation is selected, the ohms reading (thermistor resistance) is then calculated by the instrument and can be displayed either in degrees C or degrees F dependent on which math feature is selected. The Thermistor math operation with the results displayed in degrees C is selected by the "6" (°C) key. The "5" (°F) key is used for degrees F. Refer to Table 1-1 for the Thermistor accuracy specifications. The recommended Thermistor can be ordered by -hp Part Number 0837-0164. A package of 4 thermistors is also available under Accessory Number 44414A. The thermistor's corresponding resistor value at high and low temperature limits and at nominal room temperature is:

Temperature	Resistance
150°C	92.7 Ohms
25°C	5000 Ohms
-80°C	3684 K Ohms

3-95. Keep a couple of things in mind when using the Thermistor mode. Choosing an optimum ohms range for the termperature measurement has been mentioned in the preceding paragraph. This is important for a stable reading. You can use other ranges or autorange, but the reading may be unstable. To demonstrate this, choose a high ohms range for the thermistor. An ohms reading is still taken and the temperature is still calculated; but since a higher range is more sensitive for low ohms values, the reading is not as stable. Autorange may have the same effects, since there may be a difference from range to range. Another thing to keep in mind is lead resistance. If 2-Wire Ohms is used, any lead resistance is added to the thermistor resistance causing an inaccurate temperature reading.

3-96. Statistics.

3-97. The Statistics math feature of the -hp- Model 3456A is used to make a Mean and Variance calculation of reading(s) taken in any function. These calculations are made when the instrument is set to the Statistics (STAT) mode and after a measurement cycle is completed. The Mean value is then stored into the MEAN register with the number of readings taken stored into the COUNT register. The Variance value is stored into the VARIANCE register with highest reading taken stored into the UPPER register and the lowest reading into the LOWER register. In addition, the first reading taken is also stored into register Z. Except for the Variance calculation, all other statistics calculations are done after the first measurement cycle is completed. The Variance calculation needs at least two readings to calculate its value. The default values of the MEAN, VARIANCE, COUNT, UPPER, LOWER, and Z registers are 199999 +9, −00.000 −3 (0), 0, 1999999 +9, −1999999 +9, and 0 respecitvely. The Statistic mode is selected by the "2" (STAT) key. To reset the registers to their default values without pressing the 3456A's RESET button or cycling power, select the statistics function again by pressing the MATH button and STAT key. Refer to Table 1-1 for the Statistics Accuracy Specifications.

NOTE

Since the math calculations are made to 9 digits, certain accuracy limitations as shown in Table 1-1 should be kept in mind.

3-98. Mean. The Mean (Average) value is calculated by the formula:

$$\text{Mean (M)} = X_1 + \frac{1}{C} \sum_{i=1}^{C} (X_i - X_1) = \overline{X}$$

Where "X_i is the "ith" reading taken after enabling statistics, "X_1" is the first reading taken after enabling Statistics, and"C" is the total number of readings taken with the present reading (X) displayed on the front panel. The present Mean value is in the MEAN register and it, along with the other registers used in the Statistics mode, can be recalled at any time by recalling the appropriate register.

3-99. Variance. The Variance value is calculated by the formula:

Variance (V) =

$$\frac{\sum_{i=1}^{C} (X_i - X)^2 - \frac{1}{C}\left[\sum_{i=1}^{C} (X_i - X_1)\right]^2}{C - 1}$$

Where "X_i" is the "ith" reading taken after enabling statistics, "X_1" is the first reading taken after enabling Statistics and "C" is the total number of readings taken with the present reading (X) displayed on the front panel. The present Variance value is in the VARIANCE register and it, along with the value(s) in the other register(s), can be recalled at any time by recalling the appropriate register.

3-100. Statistics Example. One way to use the Statistics feature is to calculate the average value of a number of resistors. Start by setting the 3456A to the ohms function and Single Trigger mode. Then select the Statistics Math mode. Next connect the first resistor to the input terminals and trigger the instrument (push the SINGLE trigger button). Do the same for the other resistors after the measurement cycle is completed. When all of the resistors are measured, you can determine the average value of the resistors by recalling the MEAN register. The Variance of the register values can be recalled by the VARIANCE register. To doublecheck the number of resistors you have measured, recall the COUNT

register. For the lowest value, recall the LOWER register and the UPPER register for the highest value.

3-101. READING STORAGE.

3-102. The Reading Storage feature of the 3456A allows you to store into the instrument's internal memory a certain number of readings. The memory size is 1400 bytes and since each reading takes 4 bytes of memory up to 350 readings can be stored, depending on available memory space. This is because the Program Memory Operation of the 3456A (see Paragraph 3-200) also uses the internal memory and, if used, reduces memory space allowing fewer readings to be stored. The number of storable readings can be determined by this formula:

Memory Size - Memory Used = Memory Available (rounded off to the lowest value)

For example, if you use 85 bytes of memory for the Program Memory operation the total number of readings you can store is:

$$\frac{1400 - 85}{4} = 328.75$$

allowing you enough space for 328 readings.

3-103. The Reading Storage feature is enabled by pressing the front panel's RDGS STORE button. The LED next to the button then lights and the instrument starts storing a reading when triggered. The LED turns off when the feature is disabled or when the 3456A's internal memory is full. To turn the Reading Storage feature off, press the RDGS STORE button a second time. The readings in the memory are cleared when the Reading Storage is first turned on and the 3456A is triggered, by the Self Test mode, and at Turn-On.

3-104. Readings are stored into memory with the most recent reading as reading #1 and the preceding readings as #2, #3, and so on. For example if you take 350 readings, the reading taken after enabling the feature is #350 and the last reading taken is #1. The reading order is important to keep in mind when recalling the reading(s). Any or all of the readings can be recalled either one at a time or they can be scrolled. These two methods operate as follows.

a. Recalling Single Readings. To recall a single reading from memory

1. Set the 3456A to Trigger Hold and then turn Reading Storage on. The Trigger is set to Hold because a trigger restarts the Reading Storage, when enabled, and the previously stored readings are cleared.

2. Next store the number corresponding to the reading you wish to recall into register R (use store method in Paragraph 3-60).

3. Then recall the R register (by pressing the RECALL button and key "4").

The reading is then displayed on the front panel. When you press the RECALL button again without pressing the "4" key, the following reading is then displayed. Press the button again and the next reading is displayed, and so on. Try the following example in which reading #3 through #1 are recalled.

1. Press the HOLD trigger button and then press the RDGS STORE button.

2. Store "3" into register R by pressing the STORE button and then key 4.

3. Recall the register by pressing the RECALL button and key 4. Reading #3 is now displayed on the front panel.

4. Press the RECALL button again and reading #2 is displayed.

5. Reading #1 is next displayed when the RECALL button is again pressed.

b. Scroll Readings. This procedure is very similar in recalling a single reading. The only difference is that the reading number is entered into register R as a negative number. When that register is then recalled the reading which corresponds to the stored number is then displayed. The display time is determined by the DELAY register value. The next reading is then displayed and then the next reading and so on. Since the time between readings is very short and makes it impossible to see the readings, store a delay into the DELAY register. A 1 second delay, for example, will display each reading for 1 second. The last reading to be displayed is reading #1 and remains until the 3456A's operation is changed.

3-105. The 3456A can also perform other operations while recalling readings. When recalling a single reading, the reading number is displayed before displaying the actual reading. But since the display time is determined by the value in the DELAY register, the reading number may not be seen. Here again, a delay has to be stored into the DELAY register. The reading number is then displayed for a time determined by the delay. Another operation you can do is to select a math operation while the recalled readings are scolled. For instance, select the Statistics math operation to find the Mean, Variance, Upper, Lower, and Count values of the stored readings. An example on how to use this feature with 350 stored readings is as follows.

a. Press the HOLD trigger button and then the RDGS STORE button.

b. Enter "-350" into the R register to scroll the readings starting with reading #350.

c. Select the Statistics math operation by pressing the MATH button and then the "2" (STAT) key.

d. Recall the R register by pressing the RECALL button and then the "4" (R register) key. The scrolled readings should now be displayed.

e. When the scrolling is completed (no updating of the display), the reading's Mean, Variance, and Count values can now be determined by recalling register MEAN, VARIANCE, and COUNT respectively.

3-106. VOLTMETER COMPLETE.

3-107. The voltmeter complete connector is a BNC connector which outputs a sync signal during the measurement cycle . The signal itself is composed of an approximately 330 nanosecond wide negative going TTL level pulse. One way to use the sync signal is to advance a scanner, like the -hp- Model 3497A. To do this, connect the 3456A's voltmeter complete output to the scanner's channel advance input. Once the connection is made, the scanner advances to the next channel during the 3456A's measurement cycle. The voltmeter complete output is designed to drive at least one TTL input.

3-108. GUARDING.

3-109. General.

3-110. The Guarding Terminals on the -hp- Model 3456A can be used to reduce or cancel error causing common-mode voltages. Figure 3-9 gives three methods of making guard connections. A Guard Terminal on the 3456A is used to make the connections. Both the front panel and the rear panel have a Guard Terminal. For most measurements the terminal should be connected to the common (Low) input terminal. This is done internally in the instrument when the Guard Switch is in the IN position. Each of the Guard Terminals use a separate switch for a connection to each of the common terminals, with the switches located above their respective Guard Terminals.

3-111. Guarding Information.

3-112. Detailed information on guarding methods and the purpose of guarding can be found in -hp- Application Note Number 123, "Floating Measurements and Guarding". This application note is available through your nearest -hp- Sales and Service Office.

3-113. FRONT/REAR SWITCH LOCKOUT.

3-114. The Model 3456A is provided with an interlock for the Front/Rear Switch. This has been provided for you to lock the switch either for the front or rear terminals, preventing any quick changes from front to rear. The switch is locked in the front position when the arrow marked on the lock is pointing toward the FRONT lettering. In the rear position the arrow is point to the REAR lettering. A procedure to install and remove the lock is given in Appendix B.

3-115. REMOTE OPERATION.

3-116. General.

3-117. The following gives instrument dependent information necessary to remotely operate the -hp- Model 3456A over the Hewlett-Packard Interface Bus (HP-IB). Directions for mechanical interface connections to the HP-IB are given in Section II (see Paragraph 2-18) of this Manual. You should be familiar with the front panel (local) operation of the instrument before attempting to use the 3456A in the remote (HP-IB) operating mode. The front panel operational information is located in the Operating Characteristics paragraphs (starting with Paragraph 3-10) in this section of the Manual.

NOTE

HP-IB is Hewlett-Packard's implementation of IEEE Std. 488-1975, "Standard Digital Interface for Programmable Instrumentation".

3-118. HP-IB Description (in Appendix A).

3-119. A general description of the HP-IB is in this Manual's Appendix A. Refer to it for any non 3456A related HP-IB information. Included in the appendix is a worksheet you can use to tabulate the 3456A's HP-IB capabilities and of other Bus compatible devices. It is assumed, in the following paragraphs, that you are knowledgeable about the HP-IB.

3-120. 3456A Response to Bus Messages.

3-121. The following paragraphs deal with the implementation of the HP-IB using the 3456A. The instrument's Bus capabilities are listed in Table 3-5. The following also explains the 3456A's response to Bus Messages, also known as Meta Messages.

Table 3-5. Interface Functions.

Mnemonic	Interface Function Name
SH1	Source Handshake Capability
AH1	Acceptor Handshake Capability
T5	Talker (Basic Talker, Serial Poll, Talk Only Model, Unaddressed to Talk if Addressed to Listen)
L4	Listener (Basic Listener, Unaddressed to Listen if Addressed to Talk)
SR1	Service Request Capability
RL1	Remote/Local Capability
PP0	No Parallel Poll Capability
DC1	Device Clear Capability
DT1	Device Trigger Capability
C0	No Controller Capability
E1	Open Collector Bus Drivers

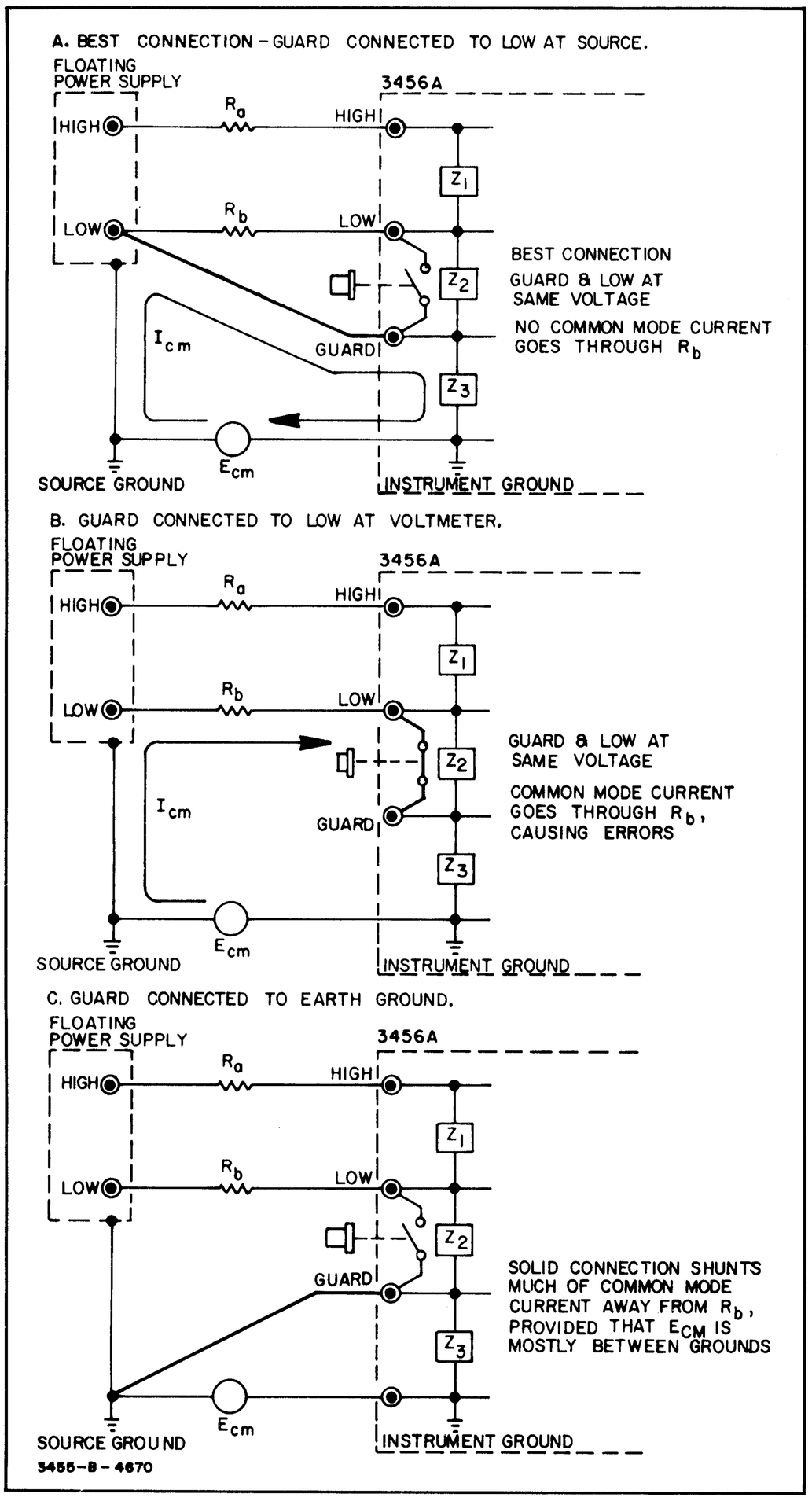

Figure 3-9. Guard Connections.

3-122. Data.

3-123. The Data Message is used to transfer information between the 3456A and the controller. It is used either to send data or receive data. A description is as follows.

a. Send Data is the 3456A's set up information (set to DCV, etc.). The instrument has to be in Remote and Listen (a listener) and the controller a Talker.

b. Receive Data is the 3456A's output. This includes readings and instrument status. To send the data, the 3456A is the talker and the controller is a listener.

3-124. Trigger.

3-125. The Trigger Message causes the 3456A to initiate a measurement cycle. It is an HP-IB Trigger and triggers the instrument in any front panel Trigger mode, since it has priority over other trigger conditions. If the 3456A is triggered during a measurement cycle, the cycle is aborted. If the instrument is executing a measurement cycle, it will be aborted upon receipt of a Bus Trigger. The 3456A has to be programmed to "listen" to execute the trigger.

3-126. Clear.

3-127. The Clear Message sets the 3456A to the turn-on state. This action is similar to pressing the RESET button on the instrument's front panel. The Clear, Turn-On, and Reset differences are listed in Table 3-6.

Table 3-6. 3456A Clear, Home, and Reset Differences.

	Status Byte Byte Reset	HP-IB Address Reset	Hardware Reset	Program Memory and Reading Storage Clear	Time
Power-On	Y	Y	Y	Y	= 3 sec
Reset	Y	Y	N	N	< .5 sec
Clear	Y	N	N	N	< 5 msec
Home	Y	N	N	N	< 5 msec
Note: Y = YES, N = NO					

3-128. Remote.

3-129. The 3456A is in the local front panel mode when first turned on. A Remote Message allow the 3456A to be controlled over the HP-IB. In Remote, the front panel controls are disabled (except the LOCAL button) and are then controllable over the HP-IB. The instrument's initial set up is determined by the front panel setting before being placed in remote.

3-130. Local.

3-131. This message clears the remote operation of the 3456A and enables the front panel operation. Pressing the front panel LOCAL button also sets the instrument to local, provided the button has not been disabled by the Local Lockout Message (see next paragraph).

3-132. Local Lockout.

3-133. This message disables the 3456A's Local Front Panel controls, including the LOCAL button. The message is in effect until the message is cleared over the HP-IB or power is cycled.

3-134. Clear Lockout and Set Local.

3-135. This message places the 3456A to local and clears the Lockout.

3-136. Require Service (SRQ).

3-137. The Require Service Message (SRQ) is independent of all other HP-IB activity and is sent on a single

line called the SRQ line. Its state is either true or false, with low being true and high being false. When the Require Service Message is sent and more than one device on the HP-IB has the capability to send this message, the user must decide which device is sending the message. This is done by conducting a "Serial Poll" for the device(s) on the Bus. The device polled responds by sending a Status Byte. The Status Byte indicates whether the device has requested service and if so, for what reason. If the device polled shows that it did not send the Require Service Message, the other devices would typically be polled. Paragraph 3-140 describes the 3456A's Status Byte.

3-138. When the 3456A sends a Require Service Message, the front panel SRQ LED is on. The message and LED are cleared when the 3456A is polled, although some of the messages are cleared by the instrument (i.e. Front Panel SRQ, Program Memory Complete, and Data Ready). The following are the conditions that can cause a Require Service Message.

Front Panel SRQ (can be cleared by the 3456A)
Program Memory Execution Complete (can be cleared by the 3456A)
Data Ready (can be cleared by the 3456A)
Trigger Too Fast
Illegal Instrument State/Internal Error/Syntax Error
Program Memory Error
Limits Failure

3-139. The 3456A requires service only if told to do so. It has to be programmed to output the Require Service Message for the previously listed conditions. This is done by setting the Service Request Mask. The mask is set by sending certain program codes to the 3456A and is explained in Paragraph 3-169.

3-140. Status Byte.

3-141. The Status Byte Message is output by the 3456A in response to a Serial Poll. Each bit represents a message. Table 3-7 lists the bits which are defined as follows.

NOTE

Remember to set the SRQ mask to output the Require Service Message.

a. Front Panel SRO. A Require Service Message can be output when pressing the 3456A's front panel SRQ button. The button is only enabled in Local operation.

b. Program Memory Execution Complete. A Require Message is output when the 3456A's internally programmed operation, called Program Memory, is completed. Information on the Program Memory Operation is in Paragraph 3-200.

c. Data Ready. A Require Service Message is output when the 3456A's measurement cycle is completed (e.g. a DCV reading is taken). More information on Data Ready is in Paragraph 3-206.

Table 3-7. Status Byte Definition.

Octal Code	Decimal Code	Bit	Definition
101	65	0	Front Panel SRQ - When the front panel SRQ button is pressed, this Require Service is output. Pressing the button a second time will clear the Service Request.
102	66	1	Program Memory Execution Complete -Indicates to the controller that all the program codes in the 3456A's internal memory are executed. The Require Service condition is cleared when the Program Memory is executed again.
104	68	2	Data Ready - Indicates to the controller that measurement data is ready to be output. The Require Service is cleared when a new measurement cycle is initiated.
110	72	3	Trigger Too Fast - Indicates that the 3456A was triggered while executing a measurement cycle. This only occurs in External Trigger.
120	80	4	Illegal Instrument State - Indicates that the 3456A is unable to do an operation because of an invalid set-up (e.g. 10 M ohm range in DCV) Internal Error - Indicates a failure in the 3456A Syntax Error - Indicates to the controller that invalid Program Code(s) where sent to the 3456A (e.g. code F9)
140	96	5	Program Memory Error - Indicates that the Program Memory Execution command or the Test function was stored in memory, or an overflow of memory occurred while loading into memory.
300	192	7	Limits Failure - Indicates that the Pass/Fail measurement made is out of the selected limits.

Note: Bit 6 is not in this table, because it is the SRQ bit.

d. Trigger Too Fast. This Require Service Message is output if the 3456A is triggered while outputting data over the HP-IB. This can only be caused by the External Trigger.

e. Illegal Instrument State/Internal Error/Syntax Error. This Message is output for the following conditions:

1. Illegal Instrument State. An Illegal Instrument State is when the 3456A is, for example, unable to complete internal operations. An example is programming the instrument to the 10 M ohm range while in the DCV function. This range is invalid in the DCV function.

2. Internal Error. An Internal Error occurs is when a digital failure occurs in the 3456A. If this may

happen, refer the instrument to a Service Trained Person.

3. Syntax Error. A Syntax Error is when invalid programs codes are sent to the 3456A. An invalid program code is F9.

f. Program Memory Error. This error occurs under the following two conditions.

1. When trying to execute the program memory from memory (program codes X1 in program memory) and when enabling the Internal Test from memory (program codes TE1 in memory). Both conditions terminate the Program Memory Operation.

2. When exceeding internal memory space during program memory loading (storing more than 1400 bytes into memory).

g. Limits Failure. A Limits Failure occurs when a limit is exceeded in the 3456A's Pass/Fail math operation. More information on the Pass/Fail feature is in Paragraph 3-81.

3-142. The Status Byte Message in Figure 3-10 is represented in octal code. Each bit, except for bit 6, indicates a particular Require Service condition. Bit 6 (seventh bit) is the Service Request bit and is true when service is required. The bit lets the controller know that a Require Service condition exists. Remember, set the SRQ mask to output the Require Service Message.

3-143. If the SRQ mask has been set for more than one condition, more than one bit of the Status Byte Message may be true. For example:

a. A Require Service condition sets bits 1, 2, and 6 true. (Remember, bit 6 is true for any Require Service.) The conditions are caused by Program Memory Execution Complete and Data Ready.

b. The Status Byte looks like:

b_7							b_0
0	1	0	0	0	1	1	0

NOTE

A "1" in this example indicates a true condition.

c. The byte is output in octal code and the corresponding octal number is:

01 000 110
└──106──┘

The resultant decimal number of octal 106 is 70.

3-144. Status Bit.

3-145. The 3456A does not respond to a Parallel Poll.

NOTE

The Status Bit is not part of the Status Byte Message and should not be confused with the bits in the Status Byte Message.

3-146. Pass Control.

3-147. The 3456A does not have controller capabilities.

3-148. Abort (Interface Clear).

3-149. All HP-IB communication is terminated, including the 3456A's Bus communication. Control is returned to the system controller. The Abort Message does not remove the 3456A from remote control.

3-150. 3456A Addressing.

3-151. HP-IB requires that a device on the Bus needs to be identified as a Listener or a Talker, in order to execute the Bus Messages and commands. Because of this requirement, each device on the HP-IB has a unique "listen" and "talk"address to distinguish themselves from each other. The device is then able to receive programming instructions when addressed to listen or sent data when addressed to talk.

3-152. The 3456A's address is set by the address switch located at the instrument's rear panel. The switch is a seven section "DIP" switch with five switches used for address selection, as shown in Table 3-8. The sixth switch is not used and the seventh switch sets the instrument to the "Talk-Only" mode (see Paragraph 3-154). The 3456A's allowable address settings are listed in Table 3-8. Its factory address setting is a listen address of 22 decimal (ASCII character "6") and a talk address of 54 decimal (character "V").

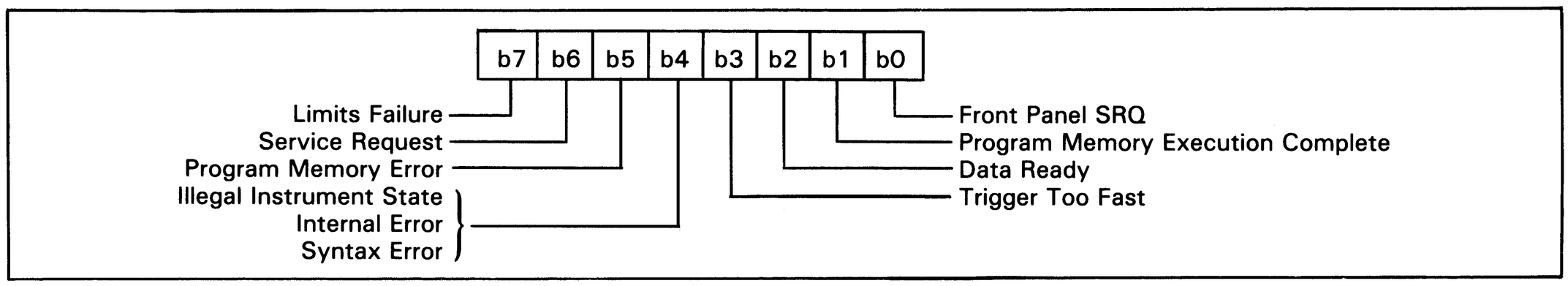

Figure 3-10. Status Byte.

NOTE

Setting the 3456A's Address Switch to the Listen Address' corresponding decimal code will also set the Talk Address.

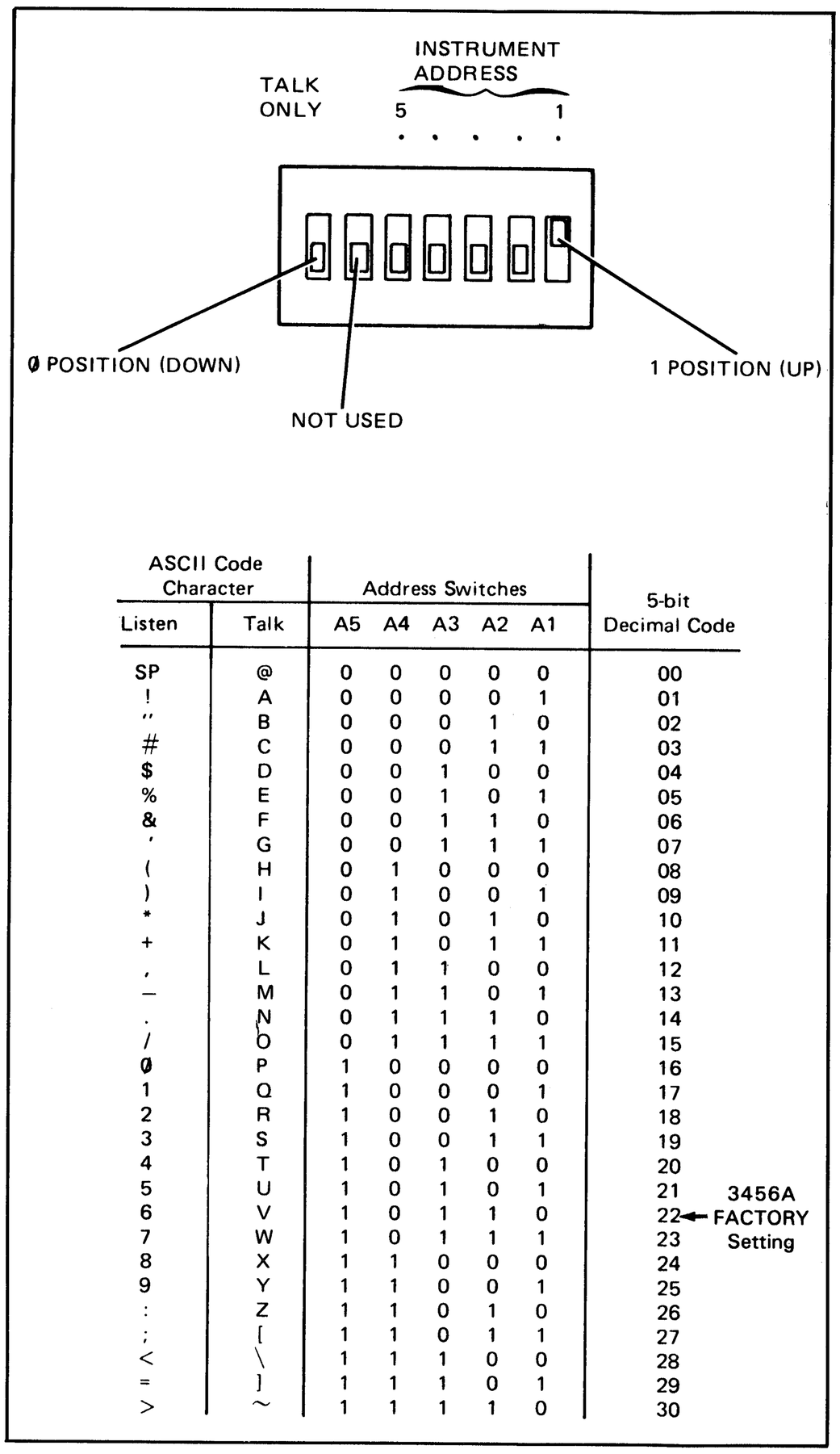

ASCII Code Character		Address Switches					5-bit Decimal Code	
Listen	Talk	A5	A4	A3	A2	A1		
SP	@	0	0	0	0	0	00	
!	A	0	0	0	0	1	01	
"	B	0	0	0	1	0	02	
#	C	0	0	0	1	1	03	
$	D	0	0	1	0	0	04	
%	E	0	0	1	0	1	05	
&	F	0	0	1	1	0	06	
'	G	0	0	1	1	1	07	
(	H	0	1	0	0	0	08	
)	I	0	1	0	0	1	09	
*	J	0	1	0	1	0	10	
+	K	0	1	0	1	1	11	
,	L	0	1	1	0	0	12	
–	M	0	1	1	0	1	13	
.	N	0	1	1	1	0	14	
/	O	0	1	1	1	1	15	
0	P	1	0	0	0	0	16	
1	Q	1	0	0	0	1	17	
2	R	1	0	0	1	0	18	
3	S	1	0	0	1	1	19	
4	T	1	0	1	0	0	20	
5	U	1	0	1	0	1	21	3456A
6	V	1	0	1	1	0	22 ←	FACTORY
7	W	1	0	1	1	1	23	Setting
8	X	1	1	0	0	0	24	
9	Y	1	1	0	0	1	25	
:	Z	1	1	0	1	0	26	
;	[	1	1	0	1	1	27	
<	\	1	1	1	0	0	28	
=	]	1	1	1	0	1	29	
>	~	1	1	1	1	0	30	

Table 3-8. 3456A Address Codes.

3-153. Instrument address commands are usually in this form:

universal unlisten, device talk, device listen.

The universal unlisten command removes all listeners from the HP-IB to allow only the addressed listener to receive information. The information is sent by a talker which is designated by the device talk code.

3-154. Talk-Only (No Controller).

3-155. Setting the 3456A to the "Talk-Only" mode can provide measurement data to another device, like a printer, without a Bus controller. The 3456A is placed to the "Talk-Only" mode by setting the rear "DIP" switch to the mode (set the seventh switch to "1"). Once this is done measurement data is output after each trigger. Instrument set up (function, range, etc.) is done from the front panel.

3-156. 3456A HP-IB Programming.

3-157. Now that the basic HP-IB operation is known, the next thing is to program and use the 3456A over the Bus. First, determine the measurement or instrument operation you want. Then determine the 3456A's program codes. The codes are ASCII characters transmitted over the HP-IB to the instrument.

3-158. Once you have defined the instrument criteria and program codes, next write an algorithm on how to make the measurement. When you have done this, convert the Algorithm to controller language. Refer to your controller's operating manual for the language.

3-159. Algorithm.

3-160. The algorithm should show exactly how to set up and use the instrument in a certain function. To simplify the algorithm, use the twelve Bus Messages as key words in the algorithm. The messages are repeated here for your reference.

1. DATA
2. TRIGGER
3. CLEAR
4. REMOTE
5. LOCAL
6. LOCAL LOCKOUT
7. CLEAR LOCKOUT AND SET LOCAL
8. REQUIRE SERVICE
9. STATUS BYTE
10. STATUS BIT
11. PASS CONTROL
12. ABORT

3-161. The definitions of the Bus Messages are given in this manual's Appendix A, Paragraph A-11. Remember, refer to your controller manual to convert the messages. If you have an -hp- Model 9825A Controller, the controller's Extended I/O Manual (-hp- Part Number 09825-90025) has a listing of the codes. For the 9835A/B, refer to the I/O Programming Manual (-hp- Part Number 09835-90060). If your controller manual does not have a code conversion chart, you may be able to use the technical description of the messages located in Appendix A.

3-162. Here is an example Algorithm for the 3456A. Note that only the key words are used, not the codes.

a. In this algorithm, the 3456A is set up to make a DCV measurement, output it over the HP-IB and print the reading. The program ends if the 3456A sends a Require Service Message. The algorithm is as follows.

1. ABORT all previous operations
2. Set the 3456A to REMOTE
3. CLEAR the 3456A
4. LOCAL LOCKOUT the Instrument
5. Send DATA to set up the 3456A to
   a) the dc function
   b) autorange
   c) hold trigger
   d) set SRQ mask to Illegal Instrument State, Internal Error, and Syntax Error.
6. TRIGGER the 3456A
7. Send the measurement DATA to the controller and store in a variable
8. Check the 3456A to see if it REQUIRE's SERVICE
9. If REQUIRE SERVICE, check the STATUS BYTE; otherwise skip the next step
10. If the 3456A sent the STATUS BYTE, it did REQUIRE SERVICE and the program is ended
11. Print out the DATA from the variable
12. CLEAR LOCKOUT AND SET LOCAL
13. End program

3-163. Programming the 3456A over the HP-IB.

3-164. Programming the 3456A is done by DATA messages. Remember, DATA is sent or received. The DATA received by the 3456A is for instrument set up (function, range, etc.). The DATA sent by the 3456A is output data. Included in the following paragraph are programming examples of the Bus Messages and the algorithm. They are given in the HP-IB format, HPL (9825A Controller Language), and Enhanced Basic (9835A/B and 9845B Controller Language).

3-165. Program Codes (Data received by the 3456A).

3-166. Program codes are used for the 3456A's set up information. A listing of the codes is in Table 3-9. The instrument must be in "remote" and "listen" to receive the codes. An example is as follows.

a. HP-IB Format:

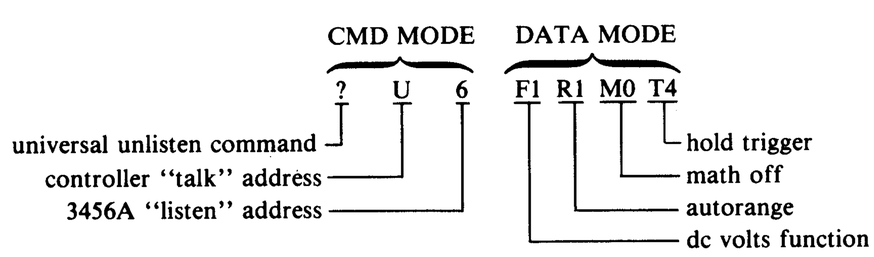

b. HPL (9825A Controller Language).

wrt 722,"F1 R1 M0 T4"

c. Enhanced Basic (9835A/B, 9845B Controller Language).

OUTPUT 722;"F1 R1 M0 T4"

NOTE

The "7" in the "722" address code is the 9825A, 9835A/B and 9845B Controllers I/O Card select code.

NOTE

The spaces between the program codes (F1spaceR1, etc.) shown in the example are not necessary. They are only included to separate the different program codes.

3-167. Storing into Registers (Y, Z, Delay, etc.) over the HP-IB.

3-168. Storing into register is similar to the front panel method. First enter the number to be stored and then store it into the register. The following examples shows how to do it, by storing "10" into the Number of Readings/Trigger register. The DCV function's program codes is also included in the example to show that other than register program codes can be in the same string.

a. HP-IB Format.

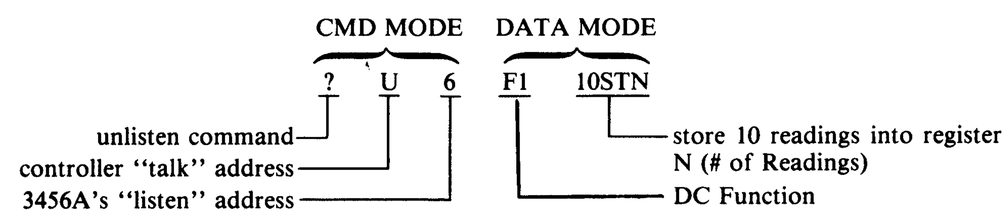

b. HPL (9825A Controller Language).

wrt 722,"F1 10STN"

c. Enhanced Basic (9835A/B, 9845B Controller Language).

OUTPUT 722;"F1 10STN"

In the example, "F1" and "10STN" is separated by a space to keep the numbers apart. This is not necessary but may be less confusing. You can, however, enter a "W" instead of a space. The "W" is ignored by the 3456A but can be used to separate numerical entries from commands. The same program string with "W" looks like this:

"F1W10STN"

Table 3-9. 3456A Program Codes.

	Control	Program Code
FUNCTION	Shift Function Off (Unshifted)	S0
	DCV	F1
	ACV	F2
	ACV + DCV	F3
	2 Wire K Ohms	F4
	4 Wire K Ohms	F5
	Shift Function On (Shifted)	S1
	DCV/DCV Ratio	F1
	ACV/DCV Ratio	F2
	ACV + DCV/DCV Ratio	F3
	O.C. 2 Wire K Ohms	F4
	O.C. 4 Wire K Ohms	F5
RANGE	Auto	R1
	100 mV or .1 K Ohms	R2
	1000 mV or 1 K Ohms	R3
	10 V or 10 K Ohms	R4
	100 V or 100 K Ohms	R5
	1000 V or 1 M Ohms	R6
	10 M Ohms	R7
	100 M Ohms	R8
	1000 M Ohms	R9
TRIGGER	Internal	T1
	External	T2
	Single	T3
	Hold	T4
AUTOZERO	On	Z1
	Off	Z0
FILTER	On	FL1
	Off	FL0
TEST	On	TE1
	Off	TE0
REGISTERS	Storing into Registers	ST
	Recalling Registers	RE
	Number of Readings	N
	Number of Digits Displayed	G
	Number of Power Line Cyc. Int.	I
	Delay	D
	Mean Register (Read only)	M
	Varience Register (Read only)	V
	Count Register (Read only)	C
	Lower Register	L
	R Register	R
	Upper Register	U
	Y Register	Y
	Z Register	Z
MATH	Off	M0
	Pass/Fail	M1
	Statistic (Mean, Variance, Count)	M2
	Null	M3
	dBm	M4
	Thermistor (°F)	M5
	Thermistor (°C)	M6
	Scale [(X - Z)/Y]	M7
	%Error [(X - Y)/Y x 100]	M8
	dB (20 Log X/Y)	M9
READING STORAGE	On	RS1
	Off	RS0
SYSTEM OUTPUT MODE	On	SO1
	Off	SO0
DISPLAY	On	D1
	Off	D0
OUTPUT FORMAT	Packed Format On	P1
	Packed Format Off (ASCII Format)	P0
CLEAR-CONTINUE	Active	CL1
NUMERIC SEPARATOR	Separates Numbers (e.g. F1W10STN)	W
HOME COMMAND	Software Reset	H
FRONT/REAR SWITCH SENSE	1 = Front, 0 = Rear	SW1
EOI	Enable	01
	Disable	0Ø
PROGRAM MEMORY	Load Program (Syntax) On	L1
	Load Program (Syntax) Off	Q
	Execute Program Memory	X1

3-169. Programming the SRQ Mask.

3-170. Program codes are used to set the SRQ Mask. Use the programming procedure in Paragraph 3-165 to send the codes. Remember, the 3456A has to be in "remote" and "listen" to receive the codes. Since the Status Byte Message is in octal, the mask is programmed in octal by using the corresponding octal codes of the message. For example, bit 2 (Data Ready) is to be set and is done by sending its octal code, 004. The following example illustrates this.

a. HP-IB Format.

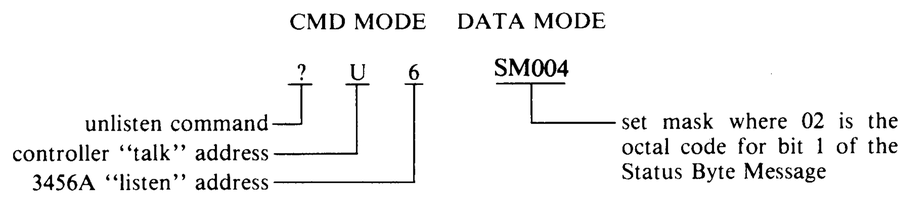

b. HPL (9825A Controller Language).

wrt 722, "SM004"

c. Enhanced Basic (9835A/B, 9845B Controller Language).

OUTPUT 722; "SM004"

3-171. Any, all, or combinations of the Require Service conditions can be set by programming the SRQ mask. All the bits can be disabled by programming the mask to "000".

3-172. 3456A's Measurement DATA (Data sent by the 3456A).

3-173. 3456A measurement data can be sent to the controller in two different formats, ASCII or Packed Format. The following explains the formats.

3-174. ASCII Format.

3-175. Output Statement. The 3456A's output data in the ASCII Format consists of 14 bytes and is in this form:

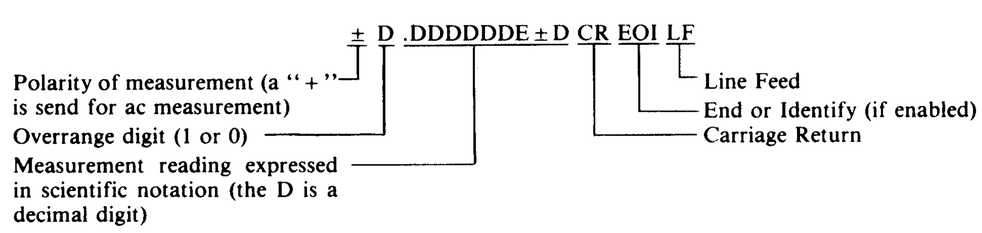

NOTE

The decimal point in the output statement is "free field" and can move to any place on the left side of the "E" and the right of the overrrange digit.

Each character in the output statement is one byte and adds up to 14 bytes (the Carriage Return and Line Feed are one character each). The first digit (D) is the overrange digit and is either "1" or "0". The decimal point can be anywhere between the right of the overrange digit (shown in this example) and the left of the exponent ("E"). The Carriage Return and Line Feed are used to terminate the output statement. The End or Identify (EOI) line is normally set by the 3456A prior to the Line Feed if enabled. The EOI statement can be disabled over the HP-IB (see Paragraph 3-186).

3-176. Overload Output Statement. The output statement from an overload condition is in this form:

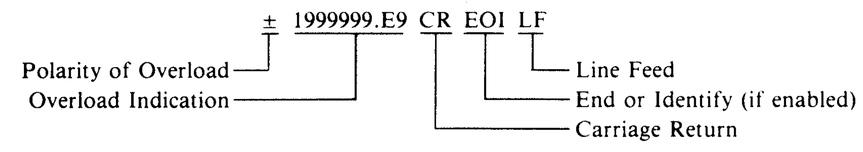

The overload polarlity depends on the type of overload condition. A "+" is normally output when a measurement overload is present. A "-" can be output when a math overload condition is present.

3-177. Multiple Reading Output. The output statement for multiple readings (Number of Readings per Trigger feature) is similar to the normal output statement. The only difference is that no Carriage Return (CR), Line Feed (LF), and End or Identify (EOI) is output until all readings are taken. A comma (,) is used in their place to separate the readings. An example for 3 multiple readings is as follows:

+D.DDDDDDE+D,-DD.DDDDE+D,
+DDD.DDDDE-D CR EOI LF

3-178. Packed Format.

3-179. Unlike the ASCII Format, the Packed Format outputs 4 bytes instead of 14. A faster reading transfer is possible using the Packed Format. Before the 3456A can output readings in the packed mode, it must be remotely programmed. The codes are "P1" (see Table 3-9) to enable and "P0" to disable the Packed Format. The ASCII Format is automatically selected at turn-on.

3-180. Output Statement. Once the 3456A is programmed to output data in the Packed Format, each measurement is output in 4 bytes. Each byte shows a certain part of the measurement data. Here is a graphic description of the packed mode.

First Byte

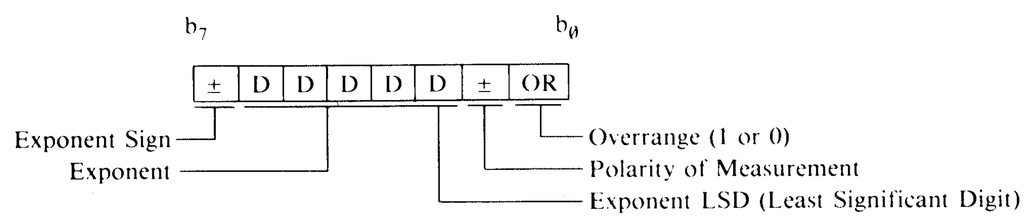

NOTE

The decimal point in the Packed Format is implied to the Overrange Digit's left.

Second Byte

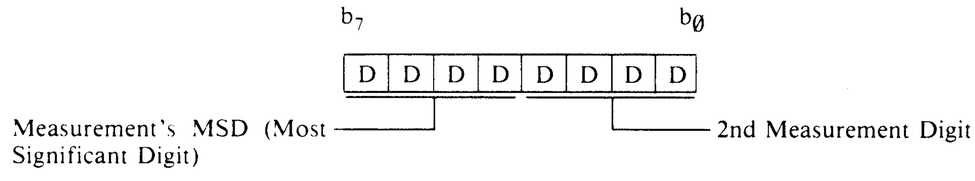

Third Byte

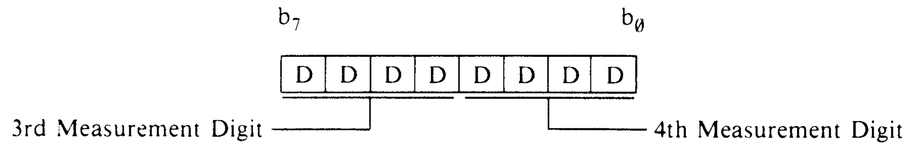

Fourth Byte

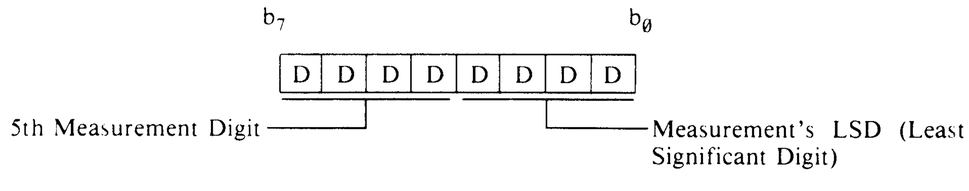

The sign (polarity) is indicated with "+" as a "0" and "-" as a "1". The exponent and the measurement digits are in packed Binary Coded Decimal (BCD). The decimal point is implied to the overrange digit's left. The End or Identify (EOI) line is normally set prior to the 4th byte.

3-181. Overload Output Statement. The Overload Output Statement in the Packed Format follows the same number convention as the ASCII overload statement. The difference is that the numbers representing the overload condition is output in the Packed mode.

3-182. Multiple Reading Output. No delimiters are used between the readings with the End or Identify (EOI) being suppressed. The EOI will not be activated until all readings are output.

3-183. Unpacking the Packed Output. Since only four bytes of data is output in the Packed Format, some sort of unpacking should be done for the reading(s) to make sense. This is done simply by converting each 8 bit binary number to a decimal number. An unpacking program using Enhanced Basic (9835A/B, 9845B Controller Language) is in Appendix A.

3-184. Reading the 3456A's Output Data.

3-185. First choose the output format you wish to use. The ASCII Format is chosen in this example. To output data, the 3456A has to be addressed to "talk" and the device receiving the data is the listener. Here is an example.

a. HP-IB Format.

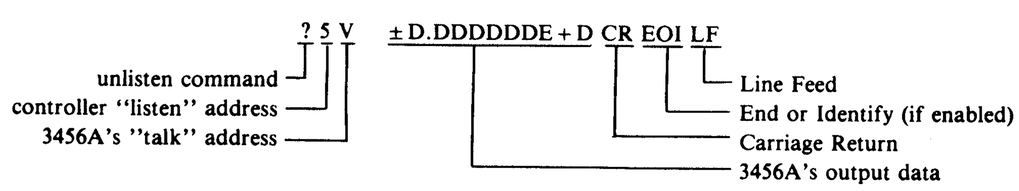

b. HPL (9825A Controller Language).

red 722,A

c. Enhanced Basic (9835A/B, 9845B Controller Language).

ENTER 722;A

NOTE

Although it is not specified in the HP-IB Format, the output of the 3456A is normally stored in a variable. This is the reason why variable "A" is used in the controller language examples.

3-186. Disabling the End or Identify (EOI) Statement.

3-187. The End or Identify (EOI) statement can be disabled over the HP-IB for a faster transfer of readings. This is done by sending program codes "OØ" to the 3456A using the programming procedure in Paragraph 3-165. Disabling the EOI statement and using the 3456A's Internal Trigger mode allows the faster possible reading transfer. The EOI statement is enabled by sending codes "O1" and at turn-on.

3-188. System Output Mode.

3-190. With the 3456A's System Output Mode enabled, a new measurement cycle is not initiated until the present reading is output by the instrument. The reading is output by addressing the 3456A to "talk". Once this is done, a new measurement cycle is started. As long as the System Output mode is enabled and no reading is output, the instrument does not take any new readings. The mode is an advantage when using controllers slower than the 3456A. For example, if the Number of Readings per Trigger operation is selected to output readings, the readings are output one after another. A slow controller may not be able to accept the readings at the 3456A's output speed and loose some or all readings. The System Output mode prevents this from happening. The 3456A waits until the controller is able to receive data. The mode is enabled by sending program codes "SO1" and disabled by codes "SO0". Use the programming procedure in Paragraph 3-165 to send the codes.

3-191. Home Command.

3-192. The Home Command is used to reset the 3456A to the same conditions as sending the CLEAR message, except faster. The differences between Home, Clear, Reset, and Turn-On are listed in Table 3-6. The Home Command is sent by program code "H" using the programming procedure in Paragraph 3-165.

3-193. Front/Rear Switch Position.

3-194. The Front/Rear Switch position can be remotely determined over the HP-IB. This is done by sending program codes "SW1" to the 3456A and then reading its output. If "0" is output, the switch is set to REAR and "1" indicates FRONT. Use the programming procedure in Paragraph 3-165 to send the codes and the procedure in Paragraph 3-184 to read the output data (switch position). The output is as follows:

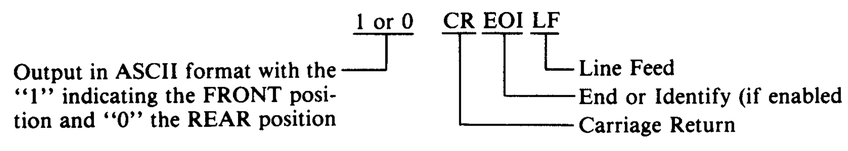

3-195. Complete Program Example.

3-196. After you know how to program the 3456A using the HP-IB, the next step is to write a program of the algorithm in Paragraph 3-162. Again, the program is given in the HP-IB Format, HPL (9825A Controller Language), and Enhanced Basic (9835A/B, 9845B Controller Language).

a. HP-IB Format.

1. Interface clear	ABORT all previous operation
2. ?U6	REMOTE the 3456A
3. ?U6 *004*	CLEAR the instrument
4. *021*	LOCAL LOCKOUT the 3456A (including the other devices on the controller's select code)
5. ?U6 F1R1T4SM020 *15 12*	Send DATA to set up the instrument to the dc function, autorange, hold trigger, and set SRQ bit 4 mask (15 is CR and 12 is LF)
6. ?U6 *010*	TRIGGER the 3456A
7. ?U5V +D.DDDDDDE+D *015* EOI *012*	Send the measurement DATA to the controller and store in a variable
8. ?5V *030*	If REQUIRE SERVICE, check the STATUS BYTE; otherwise skip the next step (the 030 is the Serial Poll enable)
9, 10. *031*	No STATUS BYTE is sent by the 3456A (the 031 is the Serial Poll disable)
11. Controller Language	Print out the DATA in variable A
12. ?U, *001*	CLEAR LOCKOUT AND SET LOCAL (in this case, only for the 3456A)
13. Controller Language	Ends the program

b. HPL (9825A Controller Language).

0: cli 7	ABORT
1: rem 722	REMOTE 3456A
2: clr 722	CLEAR 3456A
3: llo 7	LOCAL LOCKOUT
4: wrt 722, "F1R1T4SM020"	DATA. Set up instrument
5: trg 722	TRIGGER 3456A
6: red 722,A	DATA.Output of 3456A into variable
7: rds (722) → S	REQUIRE SERVICE?
8: if S=0; gto 10	If no STATUS BIT, skip the next line
9: stp	Stop the program
10: prt A	Print output DATA in variable
11: lcl 722	CLEAR LOCKOUT AND SET LOCAL (3456A)
12: end	Ends the program

c. Enhanced Basic (9835A/B, 9845B Controller Language).

10 ABORTIO 7	ABORT
20 REMOTE 722	REMOTE 3456A
30 CLEAR 722	CLEAR 3456A
40 LOCAL LOCKOUT 7	LOCAL LOCKOUT
50 OUTPUT 722; "F1R1T4SM020"	DATA. Set up instrument
60 TRIGGER 722	TRIGGER 3456A
70 ENTER 722;A	DATA. Output of 3456A into variable
80 STATUS 722;S	REQUIRE SERVICE?
90 IF S=0 THEN GOTO 110	If no STATUS BIT, skip the next line
100 STOP	Stop the program
110 PRINT A	Print output DATA in variable
120 LOCAL 722	CLEAR LOCKOUT AND SET LOCAL
130 END	Ends the program

3-197. The information you have received in the preceding paragraphs should give you a good start in programming the 3456A over the HP-IB. The following paragraphs explain some more unique remote operations.

3-198. Front Panel SRQ.

3-199. The Front Panel SRQ feature of the 3456A outputs a Require Service Message when the Front Panel SRQ button is pressed. Before this can take place, set bit 0 on the SRQ mask (refer to Paragraph 3-169 to set the mask). Once this is done, press the SRQ button. The front panel SRQ LED will turn on and the Require Service Message is output. This condition will remain until

the SRQ button is pressed a second time or a Serial Poll is done by the controller.

3-200. Instrument Program Memory Operation.

3-201. With this feature, you can store into the 3456A's internal memory any valid remote operations (excluding Test and Program Memory Execution) using program codes. Total available memory size is 1400 bytes. Because a program code takes one byte of memory you can store 1400 codes. The memory is also used with Reading Storage and any stored codes takes space away for storing readings.

3-202. Storing Program Codes. The 3456A has to be told to store into its internal memory. The program used are "L1" to enable the storage and "Q" to disables the storage. This is illustrated in the following example.

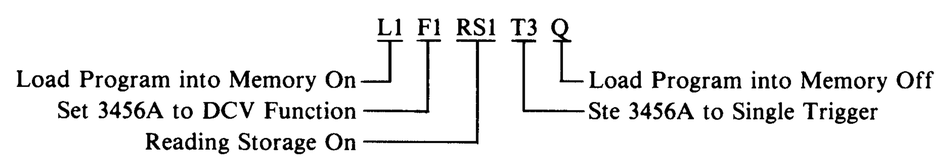

Program codes "L1" and "Q" are not stored into memory. The total memory used is 7 bytes. The codes remain in memory until the 3456A is turned off (Reset, Clear, and Home do not clear the memory). The memory can be cleared by sending codes "L1Q".

NOTE

Unlike regular remote operation, program memory only ignores blanks. Other invalid characters can produce a Syntax Error during program memory execution.

3-203. Program Execution. Once the program codes are stored in memory they can be executed. This is done by sending program codes "X1" to the 3456A. The instrument then performs the operation. In the previous example, when Program Memory is executed, a dc reading is taken and stored into memory.

NOTE

The Execute (X1) and Internal Test (TE1) codes can cause a program memory execution error.

NOTE

With Home (H) command stored in program memory while executing the memory the 3456A is reset to the Turn-On state and stops the program memory operation.

3-204. Multiple Operations. You can store and execute more than one remote operation into memory. For example, the 3456A can be programmed to do a DCV measurement, Trigger it, do an ACV measurement, Trigger it, and so on. The next example illustrates this.

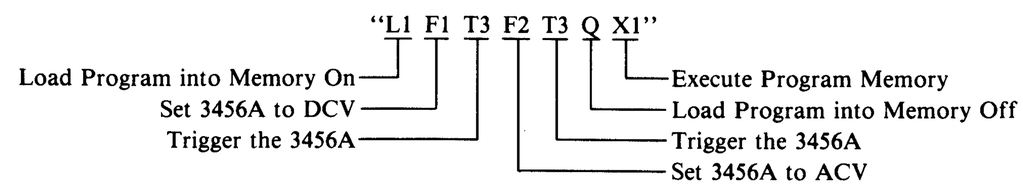

3-205. Recall of Readings from Memory. Readings are remotely recalled and output from memory similar to the front panel recall operation (see Paragraph 3-104). This is done by storing into register R the corresponding number of the reading you wish to recall. Then recall the register and output the reading. The following procedure illustrates this operation. In the procedure, reading #1 and #2 are to be recalled.

a. Set the 3456A to listen. Send the program codes for Hold Trigger, Reading Storage On, and store a "1" (reading #1) into register R.

"T4 RS1 1STR"

b. Send program codes to recall the R register.

"RER"

c. Set the 3456A to talk. Output the reading (#1) over the HP-IB.

d. Set the 3456A to listen. Send the program codes to store a "2" (reading #2) into register R.

"2STR"

e. Send program codes to recall the R register.

"RER"

f. Set the 3456A to talk. Output the reading (#2) over the HP-IB.

NOTE

Make sure the 3456A is programmed to Hold or Single Trigger when recalling readings.

The remote recall operation is similar to the front panel operation. Scrolling is also done similar to front panel operation. An example to scroll the readings, starting with #10, is as follows.

a. Set the 3456A to listen. Send program codes for Hold Trigger, Reading Storage On, and store "-10" into register R. (The -10 is used to scroll the readings starting with reading #10.)

"T4 RS1 – 10STR"

b. Send program codes to recall the R register.

"RER"

c. Set the 3456A to talk. The readings are now output over the HP-IB starting with reading #10 and ending with #1.

In the example, multiple readings are output the same as explained in paragraph 3-177. A program example using HPL (9825A Controller Language) and Enhanced Basic (9835A/B and 9845B Controller Language) is given in Appendix A.

3-206. Data Ready.

3-207. The Data Ready feature, when enabled, outputs a Require Service Message for a completed measurement cycle. The SRQ mask has to be set before the message is output. Set the mask by sending program codes "SM004" (for bit 2 of the Status Byte). When the Require Service message is sent, the front panel SRQ LED is on. The LED remains on until a new measurement cycle is started (the 3456A is triggered), when the present reading is output over the HP-IB, or when the 3456A is polled (Serial Poll). If the 3456A is set up to take a number of readings per trigger, the require service condition will be true, at the end of each reading, for about 320μs. The condition will remain true and the SRQ LED turns on, after all the readings are taken.

3-208. 3456A's Numeric Entry Format and other Input Considerations.

3-209. The 3456A's Numeric Entry Format (used in program codes) are in this form:

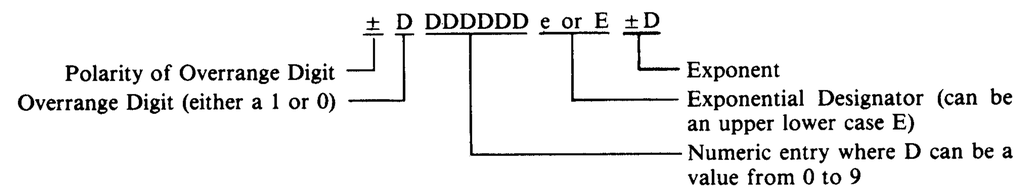

The decimal point is optional and ranges from the right of the overrange digit to the Exponential Designator's left.

3-210. When sending data to the 3456A in remote, all lower case (except "e") alpha characters, spaces, carrage return, and line feed are ignored. All other invalid ASCII characters are illegal. The optional "W" character can be used as a prefix to a numeric string like this"

F1W10STN

3-211. OPERATOR'S CHECK.

3-212. The following is an Operator's Check you can perform to check the major DCV, ACV, Ohms, and Digital circuitry. The checks are not used to verify performance accuracy. They are only used to check the operating capabilities of the 3456A. The following can be used as the Operator's Check.

a. Remove everything from the 3456A's input terminals.

b. press the TEST button. The display should go blank while doing an internal test. When the test passes and is completed, +1.8.8.8.8.8.8.+8. is displayed including all of the front panel LEDs. The cycle will then be repeated. If a negative integer is displayed, refer the 3456A to a service trained person. Press the TEST button a second time.

SECTION IV
PERFORMANCE TEST

4-1. INTRODUCTION.

4-2. This section has the Performance Test procedures to verify the 3456A's Accuracy Specifications, as listed in Table 1-1. The tests are done without removing any instrument covers. An HP-IB test is not performed since the HP-IB Verification Tape is for that purpose. In addition, no Math Operation checks are made since math accuracy depends on instrument function accuracy.

4-3. In many instances, a Performance Test is done after adjusting the 3456A. Since both the Performance Test and Adjustment procedures use the same test equipment, a combined procedure is in this Manual's Section V, Paragraph 5-21.

4-4. EQUIPMENT REQUIRED.

4-5. All of the required test equipment for the tests is listed in Tables 1-2 and 4-1. The required equipment for each individual test is listed at the beginning of each test. If any recommended test equipment is not available, substitute equipment may be used. A short description of the required equipment and the critical requirements necessary to do the various tests is given in the following paragraphs. This information may be helpful in choosing substitute equipment.

4-6. DCV Test.

4-7. For the DCV Test a dc transfer standard is required which is calibrated to a 1.017 V to 1.019 V standard cell. The standard cell's accuracy should be calibrated by and traceable to the National Bureau of Standards (NBS). If the 3456A is to be calibrated to its 24 hour accuracy specifications, the transfer standard must be adjusted for an optimum 1 V and 10 V output using an NBS calibrated standard cell. The standard should be adjusted shortly before testing the 3456A's dc accuracy. It is also recommended to leave the transfer standard in a controlled environment where the ambient temperature is within one or two degrees of the temperature in which it was calibrated. The 3456A should also be tested in this environment. If the recommended transfer standard is not available, use an NBS calibrated standard cell (1.017 V to 1.019 V) or another transfer standard. If another standard is used, use the recommended reference divider, shown in Figure 4-2, for all DCV accuracy tests (including 1 V and 10 V). A simplified schematic of the reference divider and associated set-up is in Figure 4-3. The following lists some of the test equipment and their critical requirements.

a. DC Transfer Standard. The DC Transfer Standard chosen for the DCV Test is the Fluke Model 731B DC Reference Standard. The critical requirements are:

1. Required output voltage is 1.018 V or 1.019 V. A transfer standard with 1.017 V capability can also be used.

2. Additional required output voltages are 1 V and 10 V.

3. Accuracy requirement is at least ± 5 ppm (± .0005%).

4. Stability is better than ± 10 ppm (± .001%) for 30 days.

b. DC Voltage Standard. The DC Voltage Standard chosen for the DCV Test is the Systron Donner Model M107 Precision Voltage Source. The critical requirements are:

1. Output from 10 mV to 1000 V dc.

2. Within ± .005% full scale accuracy.

3. Short term stability better than .0002% per hour.

c. Reference Divider. The recommended reference divider is the Fluke Model 750A Reference Divider. The critical specifications are:

1. Output voltage range is from .1 V to 1000 V.

2. Division accuracy is better than ± .001%.

4-8. Ohms Test.

4-9. For the Ohms Test use the recommended standard resistors. If the resistors are not available, use substitutes that meet the critical requirements, as given below. If a substitute is not available you may be able to use a calibrated decade resistor with settings that range from 100 ohm to 10 M ohm. The correction factors on the decade resistor's calibration chart must be algebraically added to the 3456A's reading to achieve the required accuracy. The 1000 M ohm resistor, -hp-Part Number 03456-67902, is also required when using the decade resistors. The standard resistors and their critical requirements are:

a. 100 ohm and 1 K ohm standard resistors. The recommended resistors are the Guildline Model

9330/100 or 9330A/100 for the 100 ohm resistor and the Guildline Model 9330/1K or 9330A/1K for the 1 K ohm resistor. An accuracy of ± .0005% or better is the critical requirement.

b. 10 K ohm and 100 K ohm standard resistors. The recommended resistors are the Guildline Model 9330/10K or 9330A/10K for the 10 K ohm resistor and the Guildline Model 9330/100K or 9330A/100K for the 100 K ohm resistor. An accuracy of ± .001% or better is the critical requirement.

c. 1 M ohm standard resistor. The recommended resistor is the Guildline Model 9330/1M resistor with a ± .002% or better accuracy as the critical requirement.

d. 10 M ohm standard resistor. The recommended resistor is the Guildline Model 95206 with a ± .01% or better accuracy as the critical requirement.

e. 1000 M ohm standard resistor. The recommended resistor has the -hp- Part Number 03456-67902 with a ± 2% or better accuracy as the critical requirement.

4-10. ACV Test.

4-11. For the ACV Test an ac calibrator is required with a frequency range of 20 Hz to 250 kHz and a voltage range of 10 mV to 700 V. To minimize measurement uncertainties, especially below 50 Hz, the recommended ac calibrator should be calibrated. Additionally, any errors indicated on the calibrator's calibration chart should be adjusted out by adjusting its error measurement control. For example, the calibration chart indicates an output error of + .1% at 20 Hz. To output a precise 1 V, adjust the error measurement control to + .1%.

4-12. If a substitute calibrator is used which does not output a 250 kHz voltage, use the procedure in Paragraph 4-44 for the 250 kHz check. An -hp- Model 652A Test Oscillator in conjunction with the substitute calibrator is used to for the 250 kHz check. The ACV Test equipment is:

a. AC Calibrator. The recommended ac calibrator is the Fluke Model 5200A/5215A Precision AC Calibration System. The critical requirements are:

1. Frequency Response: 20 Hz to 250 kHz.

2. Output Voltage: 10 mV to 700 V.

3. Accuracy: ± .05%

4. Stability: ± .1% for a 6 months period.

b. DC Voltage Standard. The same as for the DCV Test.

4-13. TEST CARDS.

4-14. Performance Test Cards are provided at the end of this section to be used to record the 3456A's performance. It is recommended to remove the cards from the manual and fill them out while doing the test, since the test limits are printed on the cards. The cards can also be used as a permanent record and may be reproduced without a written permission from Hewlett-Packard.

4-15. CALIBRATION CYCLE.

4-16. A periodic performance verification is required for the 3456A. This should be done as part of an incoming inspection test and at a 90 day interval, depending on your environmental condition and accuracy requirements. The Performance Test can be performed for the incoming inspection test, 90 day test, and after adjustments.

4-17. TEST FAILURE.

4-18. If the 3456A fails any of the Performance Tests, perform the necessary adjustments as given in this Manual's Section V. It is also noted in the test procedures themselves when and what adjustment(s) should be performed when a certain test fails. For example, if the 3456A's 10 V reading fails, do the DCV Adjustment. This should be done before continuing with the rest of the test since an uncalibrated 10 V will probably show other DCV and Ohms failures. If the failure cannot be corrected by adjustments, refer the 3456A to a service trained person.

4-19. INSTRUMENT SET-UP.

4-20. Instrument set-up is specified in each test procedure. Also note that instument set-up is also determined by other parameters, like pressing the RESET button. This will automatically set the 3456A, for example, to the DCV function, Autorange, and 5 digit mode. Because of this, it is important to follow the procedures in the given order.

4-21. Unless otherwise specified, the Performance Test signals can be applied either to the FRONT or REAR input terminals. Make sure the FRONT/REAR switch is in the correct position before applying the signals.

Table 4-1. Recommended Test Equipment

Instrument	Critical Specification	Recommended Model	Use
DC Voltage Standard	Voltage: 10mV to 1000V Accuracy: ±.005%	Systron Donner Model M107	PAT
DC Transfer Standard	Output Voltages: 1V, 10V, 1.018V, 1.019V Accuracy: ±5ppm Stability: ±.001% (30 Days)	Fluke Model 731B	PA
AC Calibrator	Frequency: 20 Hz to 250 kHz Output Level: 100mV to 1000V Accuracy: ±.1% Voltage Stability (6 mos.) ±.02%	Fluke Model 5200A and Model 5215A	PAT
Reference Divider	Division Ratio Accuracy: ±.001% Output Voltage Range: 1V to 1kV	Fluke Model 750A	PA
Resistance Standard	Resistance: 100Ω Accuracy: ±.0005%	Guildline Model 9330/100 or 9330A/100	P
	Resistance: 1kΩ Accuracy: ±.0005%	9330/1K or 9330A/1K	PA
	Resistance: 10kΩ Accuracy: ±.001%	9330/10K or 9330A/10K	PA
	Resistance: 100kΩ Accuracy: ±.001%	9330/100K or 9330A/100K	PA
	Resistance: 1MΩ Accuracy: ±.002%	9330/1M	PA
	Resistance: 10MΩ Accuracy: ±.01%	9330/10M	PA
	Resistance*: 1GΩ Accuracy: ±2%	-hp- Part No. 03456-67902	P
DC Null Voltmeter	Voltage Range: 1μV to 10V	-hp- Model 419A	PA
Bus System Analyzer**	HP-IB Control Capability	-hp- Model 59401A	T
Desktop Computer	HP-IB Control Capability serves as printer for output data	-hp- Model 9825A, 9825B, 9835A, 9845B, or 85A	OT
Oscilloscope**	Bandwidth: DC to 100 MHz Sweep Time: 50ns to 20ms/div	-hp- Model 1740A	T
Digital Voltmeter**	Voltage Range: 100μV to 1000V Resolution: 1 μV	-hp- Model 3456A (or 3455A)	T
Resistors	Resistances: 1 kΩ ± 10%	-hp- Part No. 0684-1021	
Signature Analyzer**		-hp- Model 5004A	T
Test Program Cartridges*		-hp- Part Number 03456-10001 (9825A/B) 03456-10002 (9835A, (9845A/B) 03456-10003 (85A)	T
Isolation Logic Test Jumper*		-hp- Part No. 03456-61602	T
HP-IB Signature Analysis Modules*,**		-hp- Part Number 5061-1153 5061-1154 5061-1155	T

*These items included in 3456A Digital Voltmeter Service Kit for Component Level Repair (-hp- Part Number 03456-69800)

**These items are not required if a board level repair strategy is to be used. This strategy does require a 3456A Digital Voltmeter Service Kit for Board Level Repair (-hp- Part Number 03456-69801).

P = Performance Test T = Troubleshooting
A = Adjustment O = Operators Check

NOTE

Unless otherwise noted, make sure the 3456A's GUARD terminal is connected to the VOLTS LOW terminal (guard button in the "IN" position).

4-22. SPECIFICATION BREAKDOWN.

4-23. The 3456A's specifications are grouped according to function (ACV, DCV, etc.). Within each group are two main sets of specifications, the 24 hour and 90 day limits. The limits to which the 3456A conforms depends on when the instrument was last adjusted, either at the factory or according to this Manual's Section V. It is therefore necessary to determine which set of limits apply. If the instrument was received from the factory and an incoming inspection test is made, the 90 day limits apply. If the instrument has been adjusted (calibrated) within the last 24 hours, the 24 hour limits apply. Another important consideration is the temperature coefficients. These are not included in the limits but must be added when doing the Performance Tests.

4-24. Each set of specifications includes an accuracy specification for each voltage or ohms range. These are specified as a percentage of the reading and an add-on of a certain number of counts. For example, the 24 hour 10 V dc accuracy specification in the 6 digit mode is:

± .0008% of reading + 2 counts

giving you a full scale accuracy of ± .0008% or 8 counts plus .0002% or 2 counts which is a total of ± .0010% or 10 counts. If the 5 digit mode is selected instead of the 6 digit mode, the percentage is the same but the count number is different. In this example, the percentage is still ± .0010% with the resultant count number of "1". At 1/10 scale, the total number of counts is different, since the percentage is specified at full scale. The resultant limit is ± .0008% of reading or .8 counts plus 2 counts giving you a total of 2.8 counts (rounded off to 3 counts).

4-25. TEST CONSIDERATION.

4-26. General.

4-27. Because the 3456A is able to make highly accurate measurements, certain requirements have to be met. For example, the standards being used for the accuracy measurements should be good enough so that its errors do not introduce any significant uncertainties in the 3456A's Performance Test. A standard which is ten times better than the accuracy of the 3456A nearly eliminates the uncertainties. Since standards with these accuracies are not readily available, a compromise is necessary. A primary in house standard, one which has been certified by the National Bureau of Standard (NBS) and which is capable of supplying the necessary outputs (.1 V to 1000 V dc, for example), is recommended. If these standards are not available, you can try one of the following.

a. Use a standard that is four or five times more accurate than the 3456A specificaions to be tested. But keep in mind the potential uncertainties these standards may produce (see next paragraph).

b. Use a highly stable calibrated standard and add the correction factors (usually given on the calibration charts) to the test reading.

c. Send the 3456A to an -hp- Service Center or some other NBS-certified standards facility for calibration.

4-28. Ambiguous Region.

4-29. Some of the available standards provide output accuracy, range, and resolution to test the 3456A's performance, although in general they are not an order of magnitude better than the 3456A. It is therefore important to be aware of these uncertainties or "ambiguities". An example is in the next paragraph.

4-30. A hypothetical case is to check the 3456A's 10 V full scale accuracy with a certain standard. The 3456A's accuracy to be checked is ± .0025% with the standard's accuracy at ± .00025% (ten times better). If the 3456A's reading is "10.00026" (.0026% high), the instrument may or may not meet its 90 day limits, depending on the standard's output. With the standard's output .0002% high, the 3456A's actual reading is "10.00024" or .0024% high (.0026% - .0002% = .0024%) which is within the 90 day limits. If the standard's output is right on, the 3456A's actual reading is "10.00026" (.0026% -0% = .0026% high), which is out of the 90 day limits. Although in both instances the standard is within its limits, it may show the 3456A to be in or out of specification and therefore creates an Ambiguous Region as shown in Figure 4-1. This region gets bigger when the 3456A's specifications are tighter and/or the standard's specifications are less accurate. The most accurate check is when you know your standard's actual output.

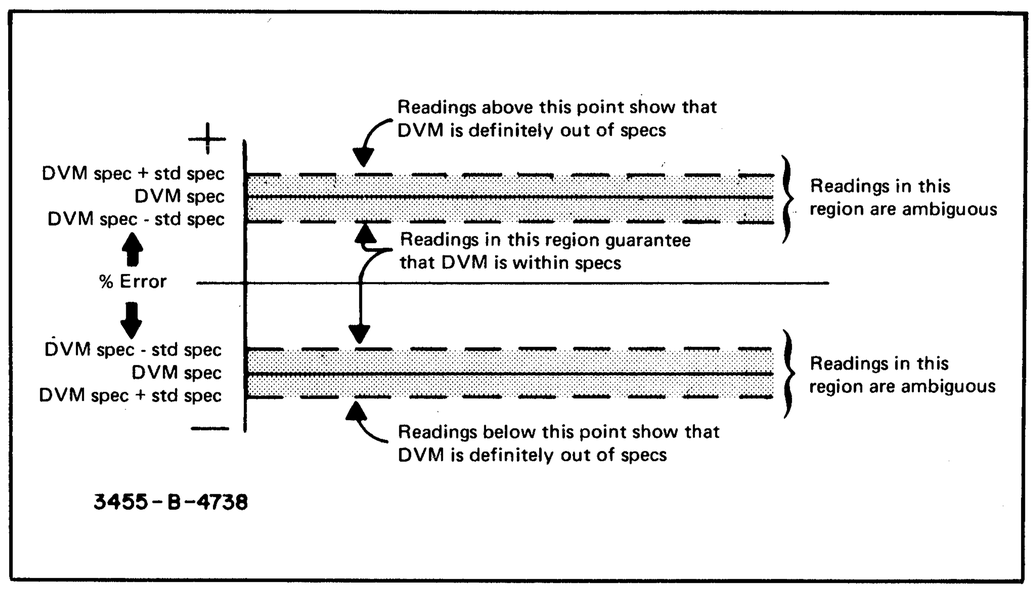

Figure 4-1. Ambiguous Regions.

4-31. PERFORMANCE TEST.

4-32. The Performance Test is separated into three main tests, the DCV, Ohms, and ACV Test. Each step in the tests and the tests themselves should be done in order, starting with the DCV Test. Allow a 1 hour warm-up time for the Performance Tests. If the 3456A has been turned on less than 1 hours, inaccuracies may result.

4-33. DCV Test.

4-34. The DCV Test limits are printed on the associated Test Card (DCV Performance Test Card) and in Table 4-2.

4-35. Equipment Required.

Reference Divider (Fluke Model 750A)
DC Transfer Standard (Fluke Model 731B)
DC Standard (Systron Donner Model M107)
DC Null Voltmeter (-hp- Model 419A)

4-36. Test Procedure.

a. Disconnect the input terminals of the 3456A from any external circuitry and press the TEST button. Make sure the instrument passes the Self-Test (see Paragraph 3-17). Press the TEST button again.

NOTE

Be sure the input terminals are open when the Self-Test is enabled.

b. Press the RESET button and short the VOLTS input terminals.

NOTE

Pressing the RESET button automatically sets the 3456A to DCV, Autorange, Internal Trigger, and 5 Digit Display.

c. Set the 3456A to the 100 mV (100 -3) range and set it to the 6 digit mode by storing "6" into the N DIG DISP register.

d. Record the displayed offset reading on the test card and make sure the reading is within the limits indicated on the Test Card and Table 4-2.

e. Do the same for the 1 V, 10 V, 100 V, and 1000 V ranges. If any offset is out of the specified limits, refer the 3456A to a service trained person.

f. Set the 3456A to Autorange and remove the short.

g. Set the Transfer Standard for a 10 V output and connect the output to the 3456A's VOLTS input terminals.

h. Record the 3456A's reading on the Test Card and make sure it is within the indicated limits. If the 10 V reading is out of tolerance, do the DCV Adjustments in this Manual's Section V.

i. Set the Transfer Standard to the 1 V range. Record and check the reading. If the 1 V reading is out of tolerance, do the DCV Adjustment in Section V.

Table 4-2. DCV Test Limits.

3456A Input	3456A Range	3456A Set-Up	90 Day Limits	24 Hour Limits
Short	.1 V Range	DCV	-00.0024 -3 to +00.024 -3	-00.0024 -3 to +00.0024
Short	1 V Range	DCV	-.000004 to +.000004	-.000004 to +.000004
Short	10 V Range	DCV	-0.00002 to +0.00002	-0.00002 to +0.00002
Short	100 V Range	DCV	-00.0003 to +00.0003	-00.0003 to +00.0003
Short	1 kV Range	DCV	-000.002 to +000.002	-000.002 to +000.002
+10 V DC	Autorange	DCV	+9.99975 to +10.00025	+9.99990 to +10.00010
+1 V DC	Autorange	DCV	+.999972 to +1.000028	+.999987 to +1.000013
+.1 V DC	Autorange	DCV	+99.942 -3 to +100.0058 -3	+99.9954 -3 to +100.0046 -3
+100 V DC	Autorange	DCV	+99.9971 to +100.0029	+99.9986 to +100.0014
+1000 V DC	Autorange	DCV	+999.854 to +1000.146	+999.867 to +1000.133
-1 V DC	10 V Range	DCV	-.99996 to -1.00004	-.99997 to -1.00003
-5 V DC	10 V Range	DCV	-4.99986 to -5.00014	-4.99994 to -5.00006
-10 V DC	10 V Range	DCV	-9.99975 to -10.00025	-9.99990 to -10.00010
-10 V DC	10 V Range	DCV, PLC = 100	-9.99975 to -10.00025	-9.99990 to -10.00010
-10 V DC	10 V Range	DCV, PLC = 1	-9.99973 to -10.00027	-9.99986 to -10.00014
-10 V DC	10 V Range	DCV, PLC = .1	-9.9991 to -10.0009	-9.9991 to -10.0009
-10 V DC	10 V Range	DCV, PLC = .01	-9.992 to -10.008	-9.992 to -10.008
-10 V DC	10 V Range	DCV, PLC = 10 Filter On	-9.99975 to -10.00025	-9.99990 to -10.00010
-10 V DC	10 V Range	Filter Off Autozero Off	-9.99974 to -10.00026	-9.99989 to -10.00011
10 V DC	10 V Range	DCV/DCV Ratio Autozero On	.99995 to 1.00005	.99998 to 1.00002
10 V DC	10 V Range	ACV + DCV/DCV Ratio	.998857 to 1.00143	.99889 to 1.00111

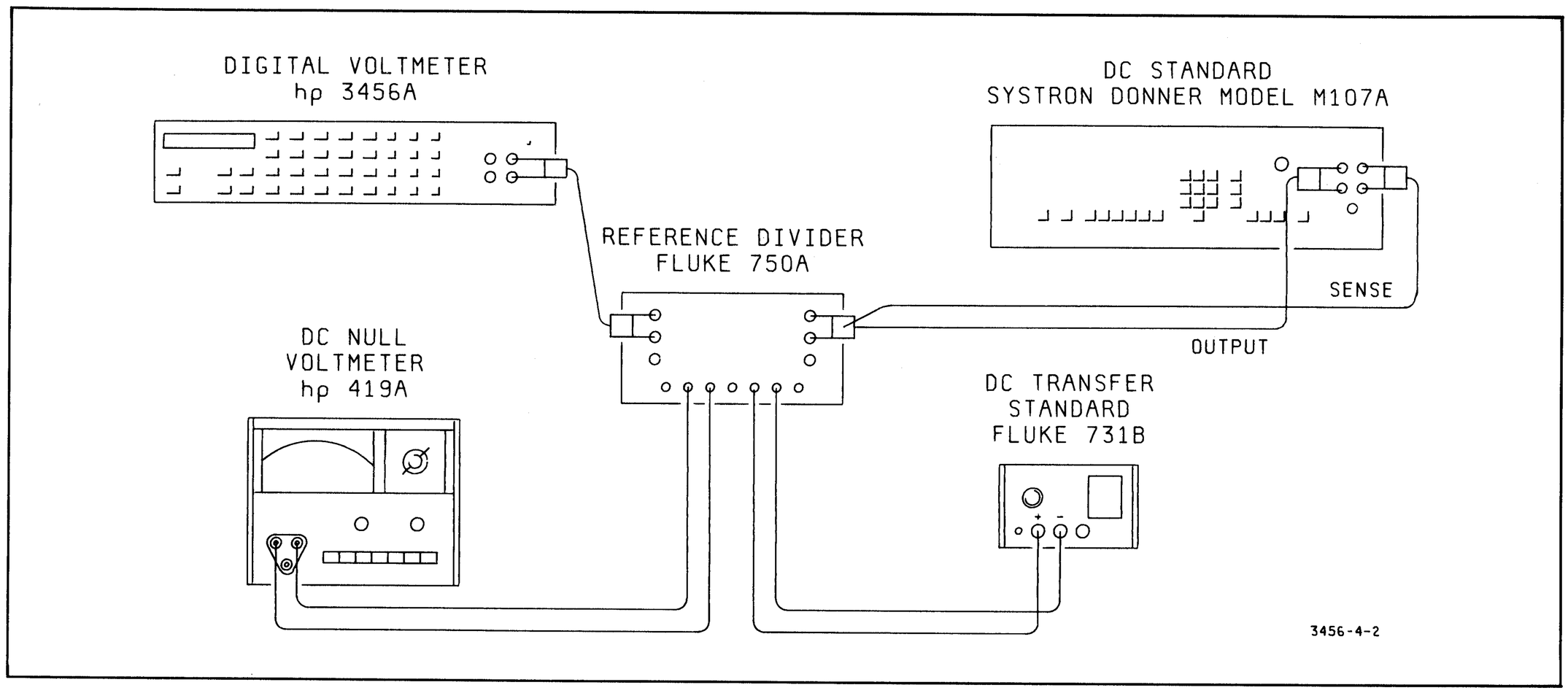

Figure 4-2. DCV Accuracy Test Set-Up.

j. Disconnect the Transfer Standard from the 3456A VOLTS terminals.

k. Using short pieces of number 20 AWG (or thinner) insulated solid copper wires, connect the Transfer Standard and the DC Null Voltmeter to the Reference Divider as shown in Figure 4-2 and Figure 4-3.

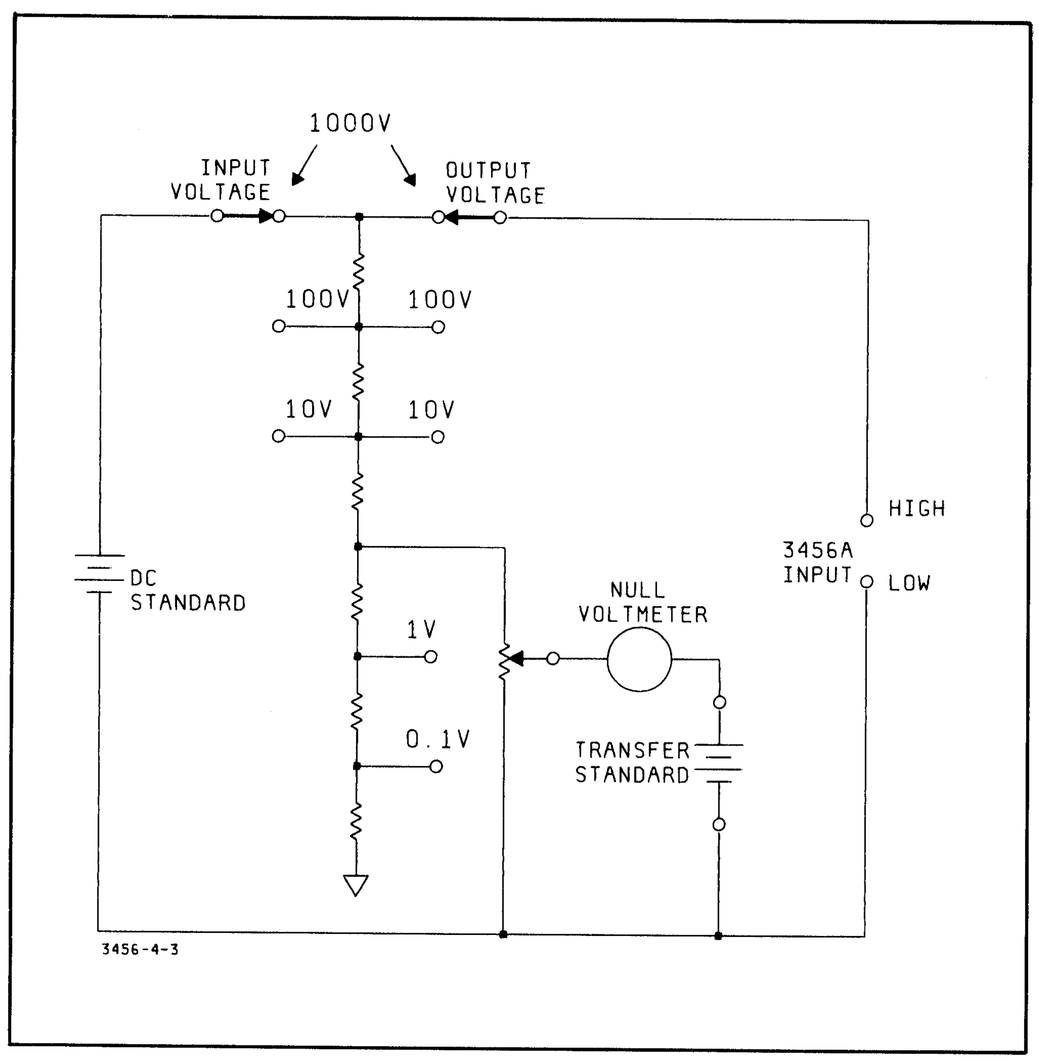

Figure 4-3. Schematic of the DCV Accuracy Test Set-Up.

l. Turn the DC Standard's output off. Using 24 inch or shorter shielded cables equipped with banana-plug connectors, connect the DC Standard and the 3456A to the Reference Divider as shown in Figure 4-2 and Figure 4-3.

m. Set the Standard Cell Voltage switches on the Reference Divider to correspond with the output voltage setting of the Transfer Standard. Normally the Transfer Standard's output should be set to the voltage value of the Standard Cell used to calibrate the Transfer Standard.

n. Zero the DC Null Voltmeter on the 3 microvolt range and then set it to the 300 microvolt range.

o. Set the Reference Divider's Input Voltage switch to 100 V and center its Coarse and Fine adjust controls.

p. Set the Reference Divider's Output Voltage switch to .1 V.

q. Set the DC Standard for an output voltage of + 100 V and turn its output on.

r. Set the Reference Divider's Standard Cell switch to the "Locked" position. Adjust the DC Standard's output voltage for a zero reading on the DC Null Voltmeter.

s. Downrange the DC Null Voltmeter and adjust the Reference Divider's Coarse and Fine controls for a "null" reading (0 reading) on the Null Voltmeter's 3 microvolt range.

t. Set the Reference Divider's Standard Cell switch to the OPEN position.

u. Set the Reference Divider's Standard Cell switch to MOMENTARY and, if necessary, readjust the Divider's Fine control for a null indication on the Null Voltmeter. Release the Standard Cell switch.

NOTE

The Divider's Fine control may have to be readjusted, when its Output Voltage switch is set to another position.

v. Record and check the 3456A's .1 V (100 mV) reading.

w. Uprange the Reference Divider's Output Voltage switch to 100 V. Record and check the 3456A reading. If the 100 V and .1 V reading is out of tolerance, do the DCV Adjustment in Section V.

CAUTION

Always uprange the Reference Divider's Input Voltage switch before upranging the DC Standard and downrange the DC Standard before downranging the Reference Divider's Input Voltage switch.

x. Uprange the Reference Divider Input Voltage switch to 1000 V and then uprange the DC Standard to + 1000 V. Allow about ten minutes for the Reference Divider to warm-up and stabilize. (The DC Standard may have to be readjusted for a null indication on the Null Voltmeter, after the Reference Divider has stabilized.)

y. Uprange the Reference Divider's Output Voltage switch to 1000 V. Record and check the 3456A's reading.

z. Downrange the DC Standard to + 10 V and then downrange the Reference Divider's Input Voltage switch to 10 V.

aa. Downrange the Reference Divider's Output Voltage switch to 1 V and set the 3456A to the 10 V range.

bb. Reverse the 3456A's input leads for a -1 V reading. Record and check the reading.

cc. Set the Reference Divider's Output Voltage switch to 5 V. Record and check the reading.

dd. Turn the DC Standard's output off and disconnect the DC Standard, Transfer Standard, and 3456A from the Reference Divider.

ee. Set the Transfer Standard for a 10 V output and connect the 3456A to the Standard with its input leads reversed (for a -10 V reading). Record and check the reading. If any of the tests in the previous tests fail, do the DCV Adjustments in Section V.

ff. Change the Number of Power Line Cycles Integrated on the 3456A to 100 by storing "100" into the N CYC INT register. Record and check the reading.

gg. Change the Number Of Power Line cycles Integrated to 1, .1, and .01 by storing "1", ".1", and ".01" into the N CYC INT register, respectively. Record and check the reading for each Power Line Cycle Integrated mode.

hh. Turn the 3456A's Filter "ON". Record and check the reading.

ii. Turn the 3456A's Filter and Autozero "OFF". Record and check the reading.

jj. Press the 3456A's RESET button. Connect the Transfer Standard's High Output to the 3456A's RATIO REF HIGH and VOLTS HIGH terminals. Connect the Standard's Low Output to the 3456A's RATIO REF LOW and VOLTS LOW terminals. Refer to Figure 4-4 for the connection.

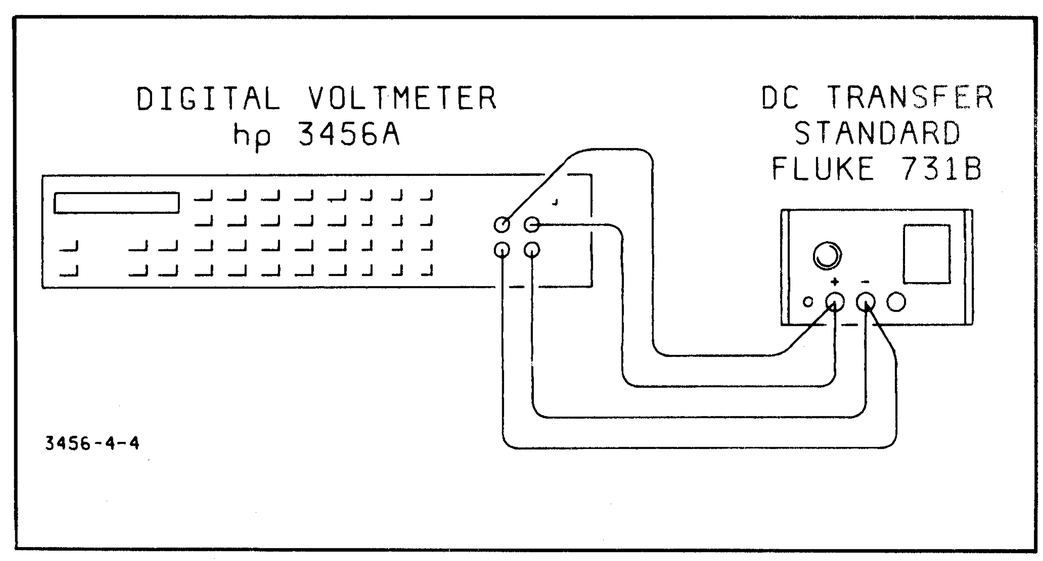

Figure 4-4. Ratio Test Connection.

kk. Set the 3456A to the DCV/DCV Ratio function. Record and check the reading. If this test fails, refer the 3456A to a serivce trained person.

ll. Set the 3456A to ACV + DCV/DCV Ratio function. Record and check the reading. If this test fails, do the ACV Adjustments in Section V.

mm. Disconnect the Transfer Standard from the 3456A. Set the 3456A to the DCV function and the 1 V range. The DC Common Mode Rejection Test is next.

nn. Connect the 1 K resistor (-hp- Part Number 0698-1021) between the 3456A's VOLTS HIGH and

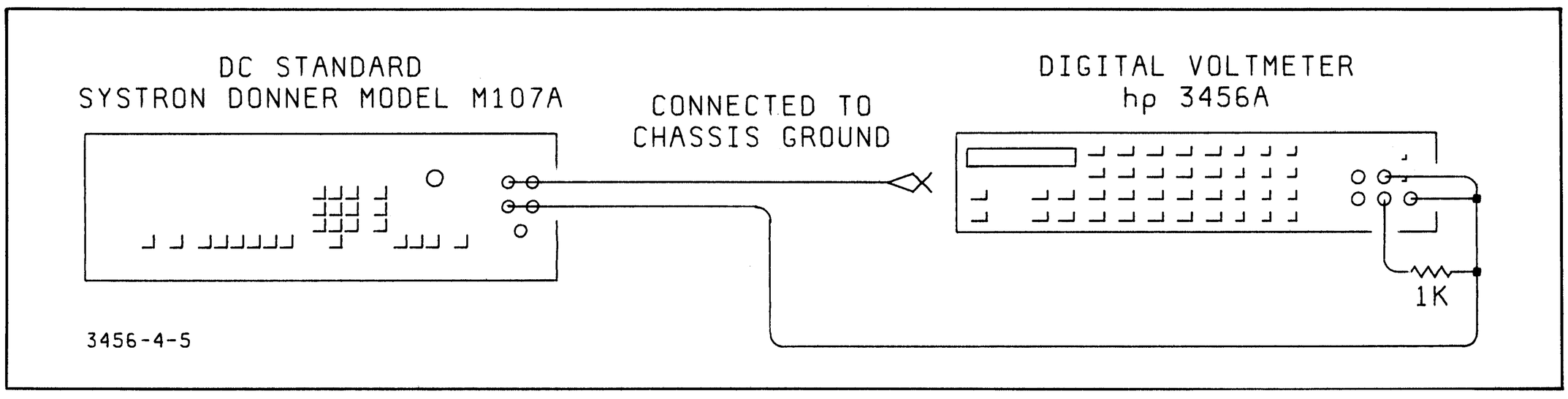

Figure 4-5. DC Common Mode Rejection Test.

VOLTS LOW terminals, as shown in Figure 4-5. Make sure the GUARD terminal is connected to the VOLTS HIGH terminal (Make sure the GUARD switch is "OUT").

oo. Record the 3456A reading.

pp. With the DC Standard's output off, connect it between the 3456A's chassis and VOLTS HIGH terminal as shown in Figure 4-5.

qq. Set the DC Standard for a + 100 V output and turn its output on.

rr. The 3456A's reading should be within 0.000010 V of the recorded reading in Step oo.

ss. Disconnect the test equipment from the 3456A. If the DC Common Mode Rejection Test fails, refer the 3456A to a service trained person. This completes the DCV Test.

4-37. Ohms Test.

4-38. Make sure the 3456A has been warmed-up for at least an hour, or inaccuracies may result or unstable readings may be indicated. Refer to Table 4-3 and/or the Ohms Performance Test Card for the Ohms Test limits.

4-39. Equipment Required.

Standard Resistor:

100 ohm ± .0005%; (Guildline Model 9330/100 or 9330A/100)
1 K ohm ± .0005%; (Guildline Model 9330/1K or 9330A/1K)
10 K ohm ± .001%; (Guildline Model 9330/10K or 9330A/10K)
100 K ohm ± .001%; (Guildline Model 9330/100K or 9330A/100k)
1 M ohm ± .002%; (Guildline Model 9330/1 M)
10 M ohm ± .01%, (Guildline Model 95206)

Resistor Assembly:

(1000 M ohm ± 2%; -hp- Part Number 03456-67902)

4-40. Test Procedure.

a. Press the 3456A's RESET button. Short across the VOLTS (2WR, 4WR) and RATIO REF (4 WR SENSE) terminals as shown in Figure 4-6.

Table 4-3. Ohms Test Limits

3456A Input	3456A Range	3456A Set-Up	90 Day Limits	24 Hour Limits
Short	Autorange	2-Wire Ohms	-00.0024 to 00.2024	-00.0024 to 00.2024
Short	Autorange	4-Wire Ohms	-00.0024 to 00.0024	-00.0024 to 00.0024
10 kΩ	Autorange	4-Wire Ohms	9.99966 + 3 to 10.00034 + 3	9.99976 + 3 to 10.00024 + 3
1 kΩ	Autorange	4-Wire Ohms	999.966 + 3 to 1000.034 + 3	999.976 to 1000.024
100 Ω	Autorange	4-Wire Ohms	99.9936 to 100.0064	99.9946 to 100.0054
100 kΩ	Autorange	4-Wire Ohms	99.9968 + 3 to 100.0032 + 3	99.9978 + 3 to 100.0022 + 3
1 MΩ	Autorange	4-Wire Ohms	999.928 + 3 to 1000.072 + 3	999.938 + 3 to 1000.062 + 3
10 MΩ	Autorange	4-Wire Ohms	9.99578 + 6 to 10.00422 + 6	9.99588 + 6 to 10.00412 + 6
1 GΩ	Autorange	4-Wire Ohms	893.999 + 6 to 1160.001 + 6	889.999 + 6 to 1110.001 + 6
1 MΩ	Autorange	2-Wire Ohms	999.928 + 3 to 1000.072 + 3	999.938 + 3 to 1000.062 + 3
10 kΩ	100 K	4-Wire Ohms	9.9995 + 3 to 10.0005 + 3	9.9996 + 3 to 10.0004 + 3
10 kΩ	100 K	Autozero Off	9.9993 + 3 to 10.0007 + 3	9.9994 + 3 to 10.0006 + 3
100 kΩ	100 K	2-Wire O.C. Autozero On	99.9966 + 3 to 100.0034 + 3	99.9976 + 3 to 100.0024 + 3
100 kΩ	100 K	4-Wire O.C.	99.9968 + 3 to 100.0032 + 3	99.9978 + 3 to 100.0022 + 3

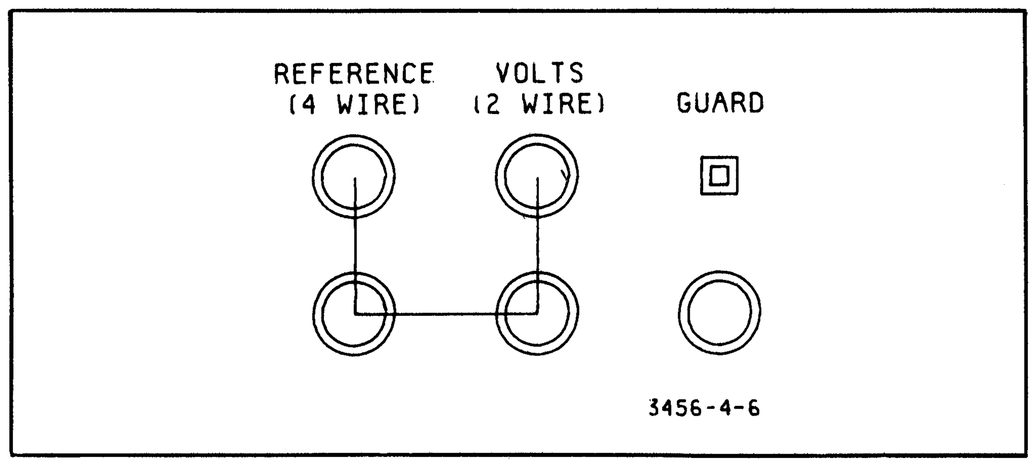

Figure 4-6. 4-Wire Ohms Short.

b. Set the 3456A to the 2-Wire ohms function and set it to the 6 digit mode by storing "6" into the N DIG DISP register.

c. Record the displayed offset reading on the Test Card and make sure the reading is within the limits indicated on the card and Table 4-3.

d. Do the same for the 4-Wire ohms function. Leave the 3456A in that function. If any of the offset tests fail, refer the 3456A to a service trained person.

e. Connect the 100 ohm resistor to the 3456A's input terminals. Refer to Figure 4-7 on how to connect the 100 ohm and other Standard Resistors to the instrument. Record and check the reading.

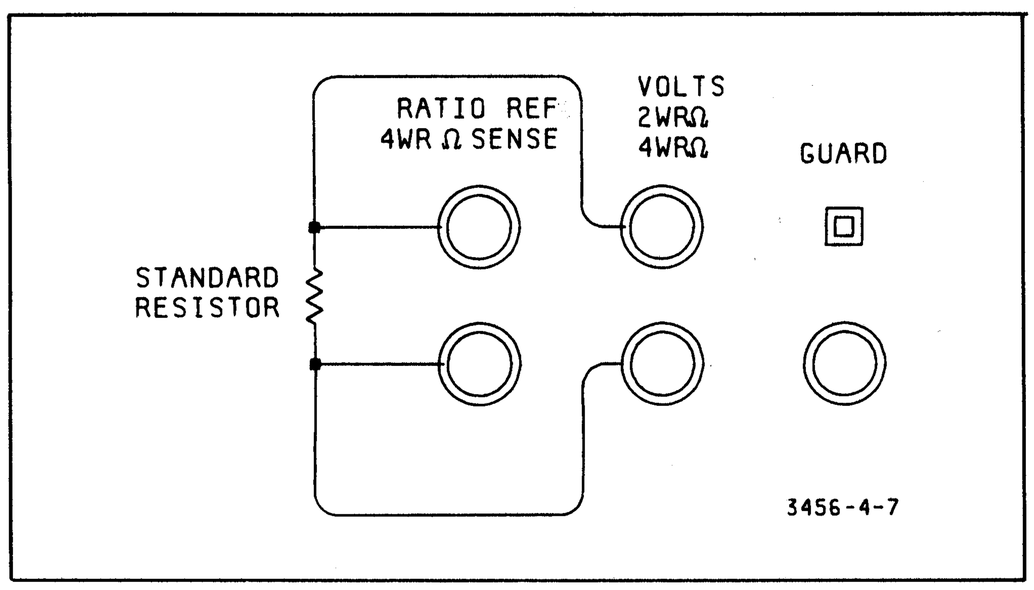

Figure 4-7. Ohms Test.

f. Do the same for the 1 K, 10 K, 100 K, 1 M, 10 M, and 1 G ohm ranges by connecting the 1 K, 10 K, 100 K, 1 M, 10 M, and 1000 M ohm resistors to the input terminals, respectively. (The ranges do not need to be changed since the 3456A is still in Autorange.) If any of the previous tests fail, do the Ohms Adjustment in Section V.

g. Set the 3456A to the 2-Wire ohms function and connect the 1 M ohm resistor to the input terminals. Check and record the reading.

h. Set the 3456A to the 4-Wire ohms function and to the 100 K ohm range. Connect the 10 K ohm resistor to the input terminals. Check and record the reading.

i. Turn the 3456A's Autozero "OFF". Check and record the reading.

j. Set the 3456A to the 2-Wire O.C. ohms function and turn Autozero "ON". Connect the 100 K ohm resistor to the 3456A's input terminals. Check and record the reading.

k. Set the 3456A to the 4-Wire O.C. ohms function. Check and record the reading. If any of the previous tests fail, do the Ohms Adjustment in this Manual's Section V. This completes the Ohms Test.

4-41. ACV Test.

4-42. Make sure the 3456A has been warmed-up for at least 1 hour. Refer to Table 4-4 and/or the ACV Performance Test Card for the ACV Test limits.

4-43. Equipment Required.

AC Calibrator (Fluke Model 5200A/5215A)
DC Standard (Systron Donner Model M107)

4-44. Test Procedure.

a. Press the RESET button on the 3456A.

b. Set the 3456A to the ACV+DCV function and apply .01 V dc from the DC Standard to the 3456A's input terminals. Record and check the reading. Make sure the reading is within the limits noted on the Test Card and Table 4-4.

c. Set the AC Calibrator for a .01 V, 1 kHz output. Remove the DC Standard from the input terminals and connect the output of the AC Calibrator to the input terminals.

d. Set the 3456A to the ACV function and record and check the reading.

e. Set the AC Calibrator to .1 V. Record and check the reading.

f. Do the same for the AC Calibrator's output of .5 V, 1 V, 10 V, 100 V and 700 V.

g. Set the AC Calibrator for a .01 V, 100 kHz output. Record and check the reading.

h. Do the same for voltage settings of 1 V, 10 V, 100 V, and 700 V.

i. Set the AC Calibrator for a 1 V, 250 kHz output. Record and check the reading.

j. Do the same for a 10 V output.

k. Set the AC Calibrator for a 1 V, 20 Hz output and turn the 3456A's Filter "ON". Record and check the reading.

l. Set the 3456A to the ACV + DCV function. Record and check the reading. If any of previous tests fail, do the ACV Adjustment in Section V. This completes the ACV Test.

4-45. Alternate 250 kHz ACV Test.

4-46. The following test is an alternate 250 kHz test which can be used with AC Calibrators that do not have 250 kHz output capabilities. Use a Test Oscillator, such as the -hp- Model 652A, to do the alternate 250 kHz accuracy test (specified for 1 V and 10 V ranges only). The accuracy is obtained by adjusting the oscillator until its 10 kHz output is the same as the AC Calibrator's 10 kHz output, as read on the 3456A. This reference level is maintained by the Oscillator within ±.25% when set-up for a 250 kHz output (using the Oscillator's expanded-scale meter).

4-47. Equipment Required.

AC Calibrator
Test Oscillator (-hp- Model 652A)

4-48. Test Procedure.

a. Press the 3456A's RESET button. Set the instrument to the ACV function.

b. Set the AC Calibrator for a 1 V, 10 kHz output and connect it to the 3456A's input terminals. Record the reading.

c. Set the AC Calibrator for a 6 V, 10 kHz output. Record the reading.

d. Disconnect the AC Calibrator from the 3456A.

e. Set the Test Oscillator for a 1 V, 10 kHz output and terminate its output with a 50 ohm load. Connect the Oscillator to the 3456A's input terminals.

f. Adjust the Test Oscillator's level controls for a reading on the 3456A to the noted reading in Step b. Set the Test Oscillator's meter switch to "expanded scale" and adjust the meter reference controls for a zero reading on the Oscillator's meter. Use the Oscillator's level controls to maintain the zero reading when varying the frequency.

g. Set the Test Oscillator for a 1 V, 250 kHz output while maintaining the reference level on the meter. Check and record the 3456A's reading.

h. Remove the 50 ohm termination from the Test Oscillator and reconnect the Oscillator to the 3456A. Set the Test Oscillator for a 6 V, 10 kHz output.

i. Adjust the Test Oscillator's level controls for a reading on the 3456A to the noted reading in Step c. Set the Test Oscillator's meter switch to "expanded scale" and adjust the meter reference controls for a zero reading on the Oscillator's meter. Use the Oscillator's level controls to maintain the zero reading when changing the frequency.

j. Set the Test Oscillator for a 6 V, 250 kHz output while maintaining the reference level on the meter. Check and record the 3456A's reading.

k. Disconnect the Test Oscillator from the 3456A. This completes the Alternate 250 kHz check.

Table 4-4. ACV Test Limits.

3456A Input	Frequency	3456A Range	3456A Set-Up	90 Day Limits	24 Hour Limits
.01 V DC	- - -	Autorange	ACV + DCV	.00928 to .01072	.00943 to .01057
.01 V AC	1 kHz	Autorange	ACV	.00929 to .01071	.00944 to .01056
0.1 V AC	1 kHz	Autorange	ACV	.09923 to .10077	.09944 to .10060
0.5 V AC	1 kHz	Autorange	ACV	.49895 to .50105	.49920 to .50080
1.0 V AC	1 kHz	Autorange	ACV	.99860 to 1.00140	.99895 to 1.00105
10 V AC	1 kHz	Autorange	ACV	9.9860 to 10.0140	9.9895 to 10.0105
100 V AC	1 kHz	Autorange	ACV	99.860 to 100.140	99.895 to 100.105
700 V AC	1 kHz	Autorange	ACV	698.32 to 701.68	698.61 to 701.39
.01 V AC	100 kHz	Autorange	ACV	.00704 to .01296	.00725 to .01275
1.0 V AC	100 kHz	Autorange	ACV	.99160 to 1.00840	.99200 to 1.00800
10 V AC	100 kHz	Autorange	ACV	9.9160 to 10.0840	9.9200 to 10.0800
100 V AC	100 kHz	Autorange	ACV	99.160 to 100.840	99.200 to 100.800
700 V AC	100 kHz	Autorange	ACV	692.76 to 707.24	693.10 to 706.90
1.0 V AC	250 kHz	Autorange	ACV	.94350 to 1.05650	.94370 to 1.05630
10 V AC	250 kHz	Autorange	ACV	9.4350 to 10.5650	9.4370 to 10.5630
1.0 V AC	20 Hz	Autorange	Filter On	.99600 to 1.00400	.99640 to 1.00360
1.0 V AC	20 Hz	Autorange	ACV + DCV	.99600 to 1.00400	.99640 to 1.00360

SECTION V
ADJUSTMENTS

5-1. INTRODUCTION.

5-2. This section of the manual has the complete adjustment procedure for the Model 3456A. After performing the adjustment procedure, the instrument should meet its 24 hour specifications. Included in this section is also a combined Performance Test and Adjustment Procedure. This may be used in place of the separate Performance Test and Adjustment procedure.

5-3. EQUIPMENT REQUIRED.

5-4. The test equipment required for each adjustment procedure is listed at the beginning of each procedure and also in Table 1-2 and 4-1. If the recommended test equipment is not available, use substitute equipment that meets the critical specification as listed in the tables. A summary of the test equipment's critical specifications and requirements is given in this Manual's Section IV Paragraph 4-4.

5-5. ADJUSTMENT INTERVAL.

5-6. The 3456A should be adjusted at a 90 day interval, after repair, or if it fails the Performance Test.

5-7. ADJUSTMENT SEQUENCE.

5-8. The 3456A Adjustments must be performed in the order they are presented in the procedure and Table 5-1, starting with the DCV Adjustment.

Table 5-1. 3456A Adjustments.

Step #	Adjustment Pot	3456A Function	3456A Range	Input to the 3456A	Displayed Reading	Tolerance in Counts	General and Set-Up Information
1							Reset the 3456A. Set to 6 digit. Connect GUARD to LOW.
2	A & B	DCV	10 V	+ 10 V DC	+ 10.00000	± 1	Adjustment "A" is coarse; "B" is fine.
3	C	DCV	1 V	+ 1 V DC	+ 1.000000	± 1	
4	D	DCV	100 mV	+ .1 V DC	+ 100.0000 -3	± 5	Enable the 3456A's Null Math feature to correct the 100 mV offset.
5	E	DCV	100 V	+ 100 V DC	+ 100.0000	± 1	
6							Set the 3456A to the 4-Wire Ohms function.
7	F	4-W Ohms	10 kΩ	10 K ohm	10.00000 + 3	± 1	
8	G	4-W Ohms	1 kΩ	1 K ohm	1000.000	± 1	
9	H	4-W Ohms	100 kΩ	100 K ohm	100.0000 + 3	± 1	
10	I	4-W Ohms	1000 kΩ	1 M ohm	1000.000 + 3	± 2	
11	J	4-W Ohms	10 MΩ	10 M ohm	10.00000 + 6	± 10	
12							Set the 3456A to the 5 Digit mode. Repeat Steps 13, 14, and 15 until readings converge.
13	K	ACV	100 V	1 V, 1 kHz	01.000	± 1	
14	L	ACV	1 V	1 V, 1 kHz	1.00000	± 3	
15	M or N	ACV	1000 V	1 V, 1 kHz	001.00	± 6	
16	N	ACV + DCV	1 V	Short	Minimum	± 2	
17	M	ACV	1 V	Short	See Note	± 2	Repeat Steps 16 and 17 until readings converge.

Note: For steps 16 and 17, do the following:

1. Note the 3456A's reading after adjusting pot "N".
2. Adjust pot "M" for a minimum reading and then continue adjusting the pot until the noted reading in Step 16 is reached.

5-9. ADJUSTMENT LOCATION.

5-10. All the adjustments for the 3456A are located behind a front panel section located at the front input terminals (see Figure 5-1). This section must be removed when doing any 3456A Adjustments. A procedure to remove the section is as follows:

a. Locate the front panel section.

b. Remove the section by loosening the hold down screws located at the section's left and right side.

c. Once the screws are loosened, remove the front panel section. One way to do it is to hold both of the loosened screws and pull the front panel section perpendicular and away from the 3456A's front.

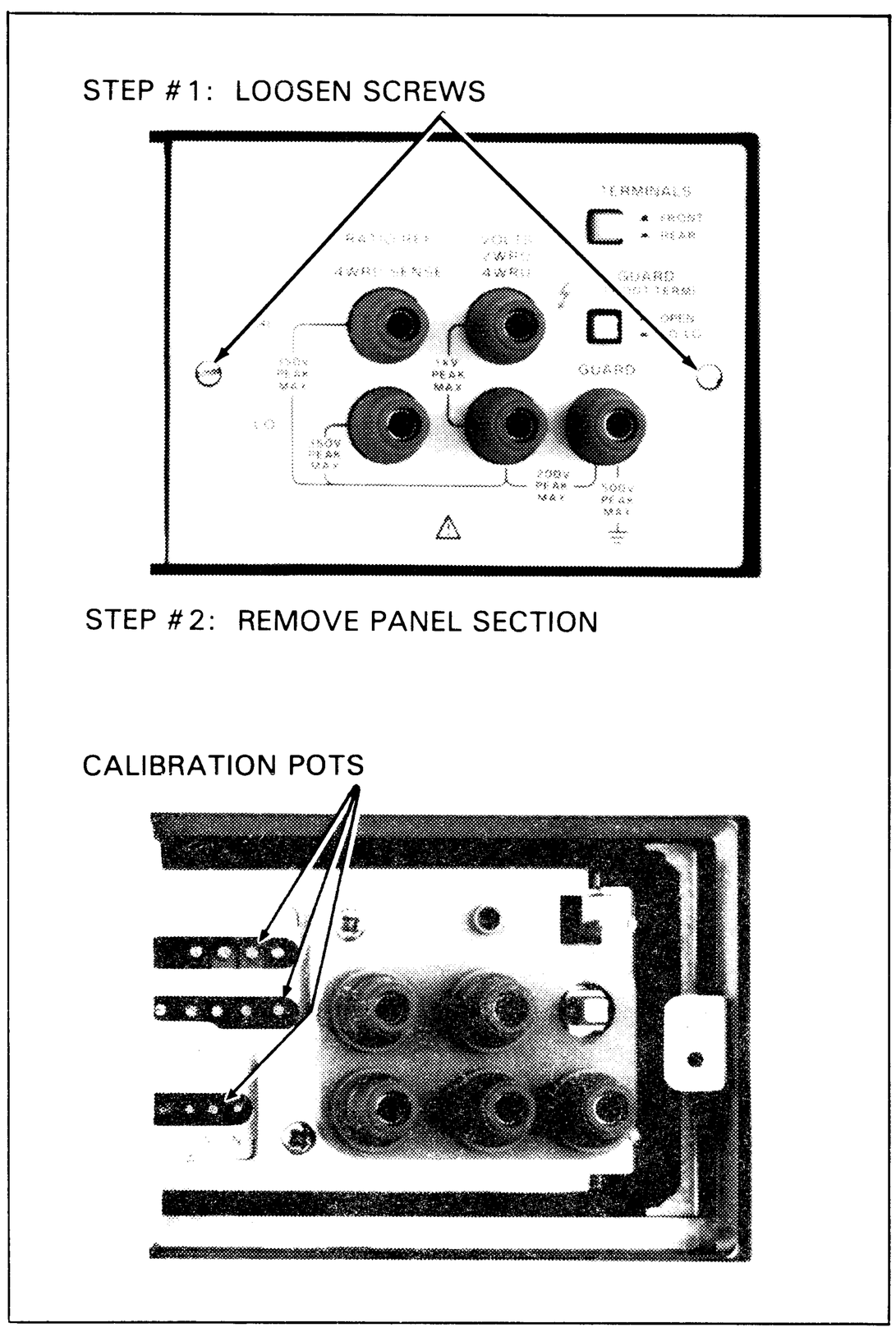

Figure 5-1. 3456A Adjustment Location.

5-11. DCV ADJUSTMENT.

5-12. The 3456A has to be warmed-up for at least 1 hour before doing any adjustments. The test equipment used for the DCV Performance Test is also used for the DCV Adjustments. Refer to Section IV, Paragraph 4-6 for the critical specifications and requirements.

5-13. Equipment Required.

Reference Divider (Fluke Model 750A)
DC Transfer Standard (Fluke Mode 731B)
DC Standard (Systron Donner Model M107)
DC Null Voltmeter (-hp- Model 419A)

5-14. Adjustment Procedure.

a. Press the 3456A's RESET button and set the instrument to the 6 digit mode by storing "6" into the N DIG DISP register.

b. Set the DC Transfer Standard for a 10 V output and connect it to the 3456A's VOLTS input terminals. Make sure the "+" output is connected to the 3456A's VOLTS HIGH terminal.

c. Adjust the 3456A's calibration potentiometer "B" for a +10.00000 V ± 1 count reading on the display. If unable to adjust to the required reading, go to the next step. If able to adjust to the required reading, go to Step e.

d. Do the following:

1. Turn calibration potentiometer "B" completely counterclockwise.

2. Turn adjustment "A" until the 3456A's reading is as close to +10 V as possible. If the reading is higher than +10.00000 V, turn adjustment "A" one position for a less than +10 V reading.

3. Adjust calibration pot "B" for a +10.00000 V ± 1 count reading.

e. Set the DC Transfer Standard to 1 V.

f. Adjust calibration pot "C" for a +1.000000 V ± 1 count reading.

g. Disconnect the DC Transfer Standard from the 3456A's input.

h. Set the 3456A to the 100 mV (100 -3) range and short the input terminals.

i. Turn on the 3456A's Null math feature, take an offset reading, and then remove the short.

j. Using short pieces of number 20 AWG (or thinner) insulated solid copper wires, connect the Transfer Standard and the DC Null Voltmeter to the Reference Divider as shown in Figure 5-2 and 5-3.

k. Turn the DC Standard's output off. Using 24 inch or shorter shielded cables equipped with banana-plug connectors, connect the DC Standard and the 3456A to the Reference Divider as shown in Figure 5-2 and 5-3.

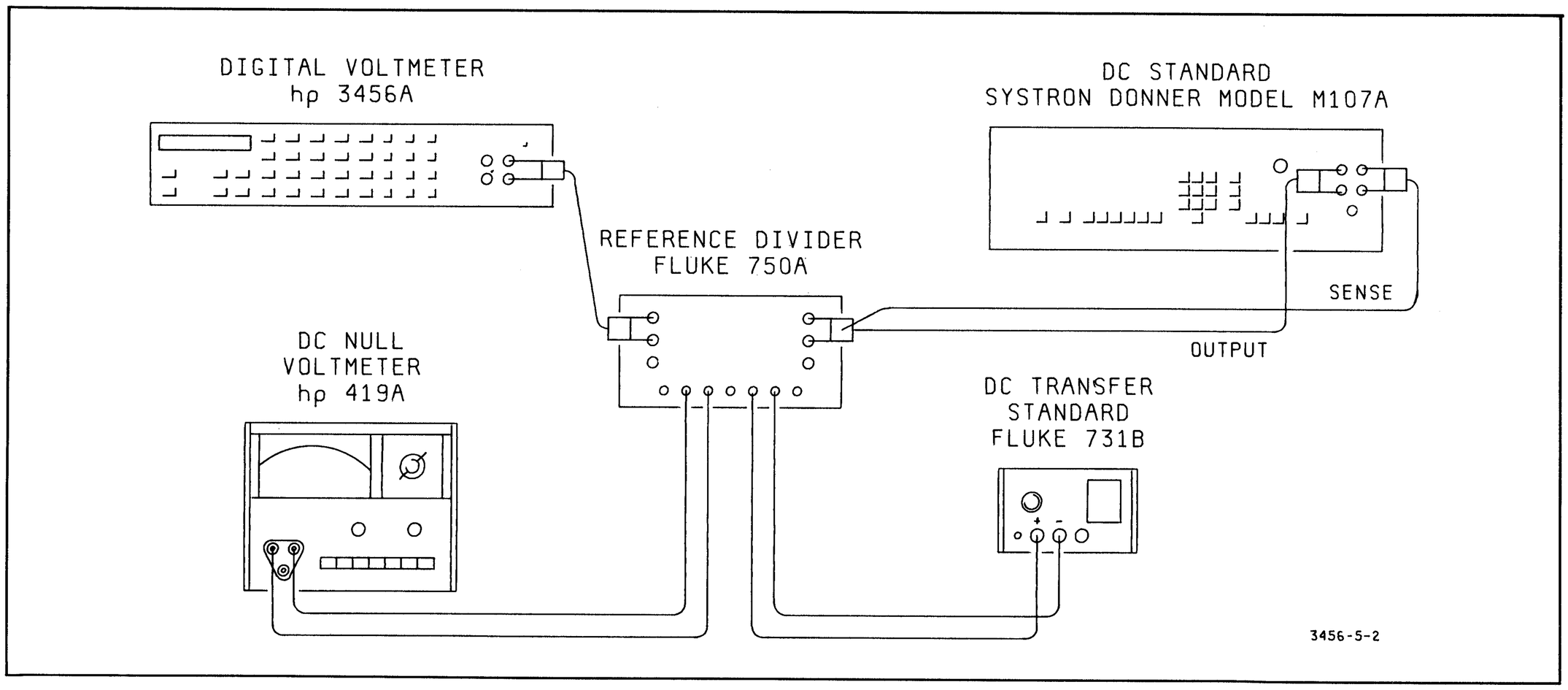

Figure 5-2. DCV Test Equipment Connection.

l. Set the Standard Cell Voltage switches on the Reference Divider to correspond with the output voltage setting of the Transfer Standard. Normally the Transfer Standard's output should be set to the voltage value of the Standard Cell used to calibrate the Transfer Standard.

m. Zero the DC Null Voltmeter on the 3 microvolt range and then set it to the 300 microvolt range.

n. Set the Reference Divider's Input Voltage switch to 100 V and center its Coarse and Fine Adjust controls.

o. Set the Reference Divider's Output Voltage switch to .1 V.

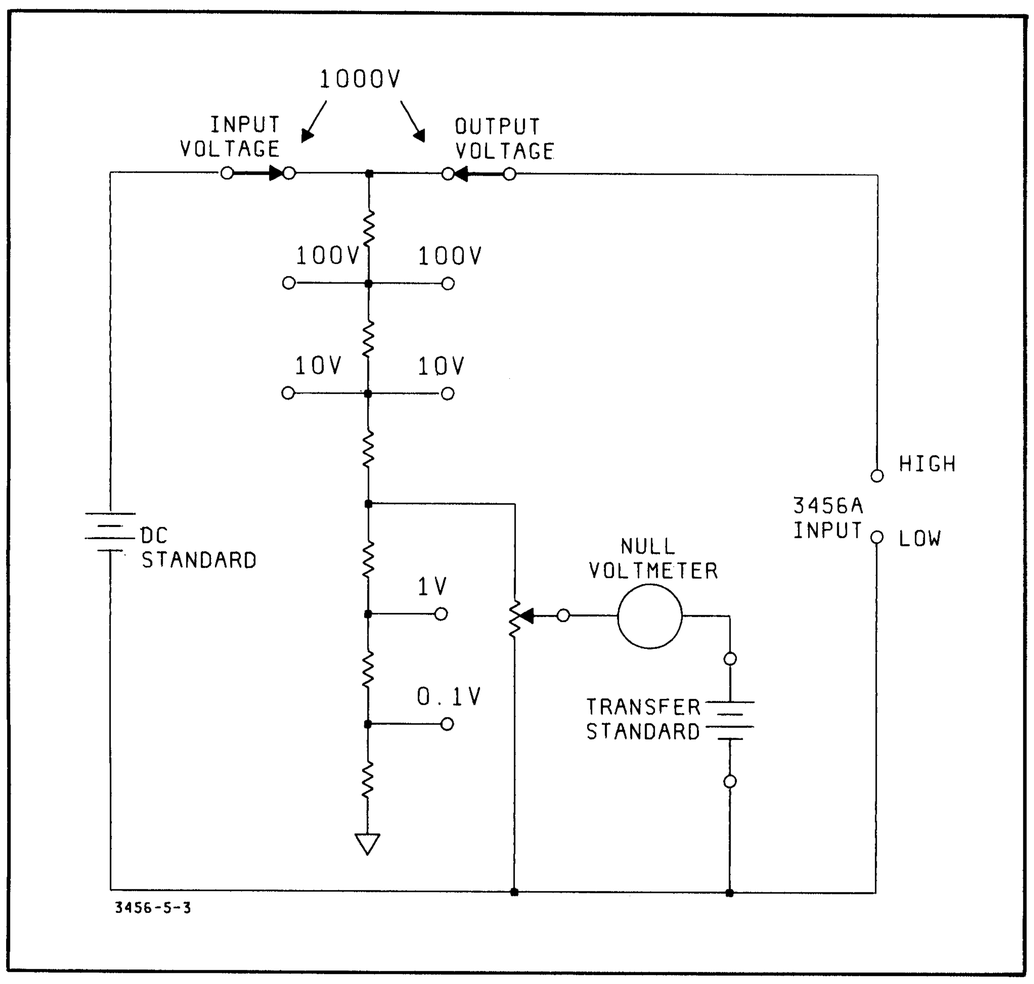

Figure 5-3. DCV Test Equipment Connection

p. Set the DC Standard for an output voltage of 100 V and turn its output on.

q. Set the Reference Divider's Standard Cell switch to the "Locked" position. Adjust the DC Standard Output for a zero reading on the DC Null Voltmeter.

r. Downrange the DC Null Voltmeter and adjust the Reference Divider's Coarse and Fine controls for a "null" reading (0 reading) on the Null Voltmeter's 3 microvolt range.

s. Set the Reference Divider's Standard Cell switch to the OPEN position.

t. Set the Reference Divider's Standard Cell switch to MOMENTARY, and if necessary, readjust the Divider's Fine Control for a null indication on the Null Voltmeter. Release the Standard Cell switch.

NOTE

The Divider's Fine Control may have to be readjusted, when the Output Voltage switch is set to another position.

u. Adjust the 3456A's calibration pot "D" for a 100.0000 -3 V ± 5 counts reading.

v. Turn the 3456A's Math off. Uprange the instrument to the 100 V range.

w. Uprange the Reference Divider's Output Voltage switch to 100 V. Adjust the 3456A's calibration pot "E" for a 100.0000 V ± 1 count reading.

x. Remove the test equipment from the 3456A. This completes the DCV Adjustments.

5-15. OHMS ADJUSTMENT.

5-16. Equipment Required.

Standard Resistors:

1 K ohm ±.0005% (Guildline 9330/1K or 9330A/1K)
10 K ohm ±.001% (Guildline 9330/10K or 9330A/10K)
100 K ohm ±.001% (Guildline 9330/100K or 9330A/100K)
1 M ohm ±.002% (Guildline 9330/1M)
10 M ohm ±.01% (Guildline 95206)

5-17. Adjustment Procedure.

a. Press the 3456A's RESET button and set the instrument to the 6 Digit Display and 4-Wire Ohms configuration.

b. Connect the 10 K ohm Standard Resistor to the 3456A's input terminals. Adjust calibration pot "F" for a 10.00000 + 3 ± 1 count reading. Disconnect the Standard Resistor.

NOTE

The Standard Resistors are connected in the 4-Wire configuration, as shown in Figure 5-4.

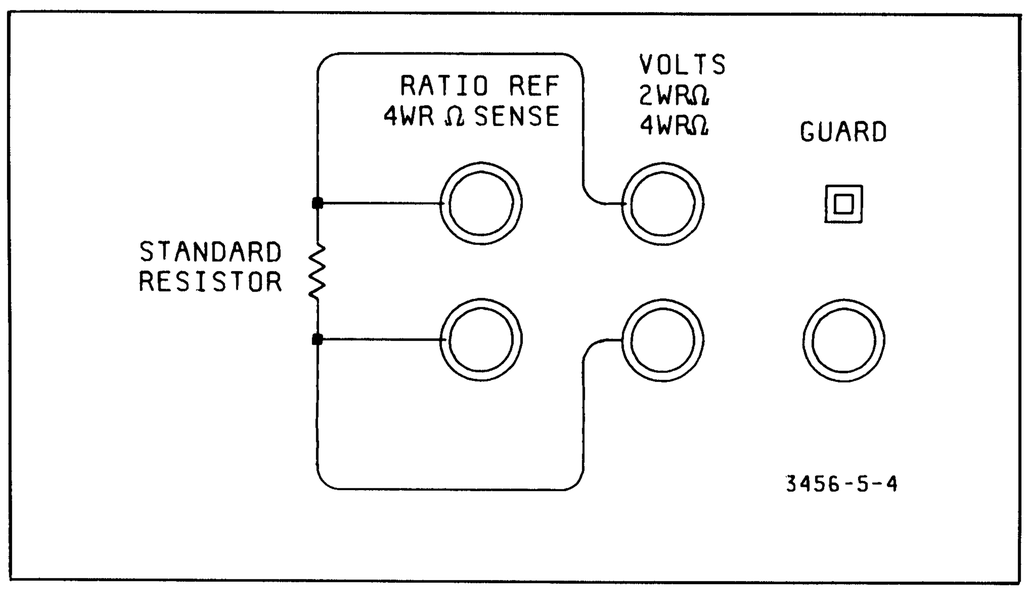

Figure 5-4. Standard Resistor Connection.

c. Connect the 1 K ohm Standard Resistor to the input terminals. Adjust calibration pot "G" for a 1000.000 ± 1 count reading. Disconnect the Standard Resistor.

d. Connect the 100 K ohm Standard Resistor to the input terminals. Adjust calibration pot "H" for a 100.0000 + 3 ± 1 count reading. Disconnect the Standard Resistor.

e. Connect the 1 M ohm Standard Resistor to the input terminals. Adjust calibration pot "I" for a 1000.000 -3 ± 1 count reading. Disconnect the Standard Resistor.

f. Connect the 10 M ohms Standard Resistor to the input terminals. Adjust calibration pot "J" for a 10.00000 + 6 ± 4 counts reading. Disconnect the Standard Resistor. This completes the Ohms Adjustments.

5-18. ACV ADJUSTMENTS.

5-19. Equipment Required.

AC Calibrator (Fluke Model 5200A)

5-20. Adjustment Procedure.

a. Press the 3456A's RESET button and set the instrument to the ACV fuction.

b. Set the AC Calibrator for a 1 V, 1 kHz output and connect it to the 3456A's VOLTS input terminals.

c. Set the 3456A to the 100 V range and adjust the instrument's calibration pot "K" for a 01.000 ± 1 count reading.

d. Set the 3456A to the 1 V range and adjust calibration pot "L" for a 1.00000 ± 3 counts reading.

e. Set the 3456A to the 1000 V range and adjust either calibration pot "M" or "N" for a 001.00 ± 2 counts reading.

f. Repeat Steps c, d, and e in the given order until all the readings are within the limits.

NOTE

Calibration pots "K", "L", and "M or N" interact with each other and should be adjusted until the readings converge.

g. Disconnect the AC Calibrator from the 3456A. Short the 3456A's input terminals.

h. Set the 3456A to the ACV + DCV function and the 1 V range. Adjust calibration pot "N" for a minimum reading.

i. Set the 3456A to the ACV function and do the following:

1. Note the 3456A's displayed reading.

2. Adjust calibration pot "M" for a minimum reading.

3. Continue adjusting calibration pot "M" in the same direction until the reading noted in Step 1 is reached (within ± 2 counts).

j. Repeat Steps h and i until both readings converge with each other (within ± 2 counts).

k. Remove the short from the input terminals. This completes the ACV Adjustments.

5-21. COMBINED PERFORMANCE TEST AND ADJUSTMENTS.

5-22. The Combined Performance Test and Adjustments are separated into three main areas, DCV, Ohms, and ACV. The procedures must be followed in the order they are presented, starting with the DCV Test and Adjustments. Also read the general information pertaining to the Performance Test (excluding the test procedures) in this Manual's Section IV, if it has not been done. This information is necessary to do the Performance Test part of the following Test and Adjustment procedures. Allow a 1 hour warm-up time for the following tests and adjustments or inaccuracies may result.

5-23. DCV Test and Adjustments.

5-24. Refer to Table 5-2 for the DCV Test and Adjustment Limits.

5-25. Equipment Required.

Reference Divider (Fluke Model 750A)
DC Transfer Standard (Fluke Model 731B)
DC Standard (Systron Donner Model M107)
DC Null Voltmeter (-hp- Model 419A)

5-26. Test and Adjustment Procedure.

a. Disconnect the 3456A's input terminals from any external circuitry and press the TEST button. Make sure the instrument passes its Self-Test (see Paragraph 3-17). Press the TEST button again.

NOTE

Be sure the input terminals are open and the Guard switch is in the "IN" position when the Self-Test is enabled.

b. Press the 3456A's RESET button and short its VOLTS input terminals.

NOTE

Pressing the RESET button automatically sets the 3456A to DCV, Autorange, Internal Trigger, and 5 Digit Display.

c. Set the 3456A to the 6 Digit mode by storing "6" into the N DIG DISP register.

d. Set the 3456A to the 100 mV (100 -3) range. Make sure the reading is within the limits shown in Table 5-2.

Table 5-2. DCV Test and Adjustment Limits.

Step #	Input to 3456A	Set-Up and Configuration	Adjust Pot	Test Limits
1	Open	Self Test	- - -	- - -
2	Short	Press RESET	- - -	- - -
3	Short	Set to 6 dig. resolution	- - -	- - -
4	Short	.1 V Range	- - -	-00.0024 -3 to +00.0024 -3
5	Short	1 V Range	- - -	-.000004 to +.000004
6	Short	10 V Range	- - -	-0.00002 to +0.00002
7	Short	100 V Range	- - -	-00.0003 to +00.0003
8	Short	1 kV Range	- - -	-000.002 to +000.002
9	+10 V DC	Autorange	A & B	+9.99999 to +10.00001
10	+1 V DC	Autorange	C	+.999999 to 1.000001
11	Short	.1 V Range Null Math On		
12	.1 V DC	.1 V Range Null Math On	D	+99.9995 -3 to +100.0005 -3
13	- - -	Null Math Off	- - -	- - -
14	+100 V DC	100 V Range	E	+99.9999 to +100.0001
15	+1000 V DC	1 kV Range	- - -	+999.867 to +1000.133
16	-1 V DC	10 V Range	- - -	-.99997 to -1.00003
17	-5 V DC	10 V Range	- - -	-4.99994 to -5.00006
18	-10 V DC	10 V Range	- - -	-9.99990 to -10.00010
19	-10 V DC	Int. = 100	- - -	-9.99990 to -10.00010
20	-10 V DC	Int. = 1	- - -	-9.99986 to -10.00014
21	-10 V DC	Int. = .1	- - -	-9.9991 to -10.0009
22	-10 V DC	Int. = .01	- - -	-9.992 to -10.008
23	-10 V DC	Int. = 10, Filter On	- - -	-9.99990 to -10.00010
24	-10 V DC	Filter Off, Autozero Off	- - -	-9.99989 to -10.00011
25	Open	Press RESET	- - -	- - -
26	10 V DC to REF H to V H and REF L to V L	- - -	- - -	.99998 to 1.00002
27	- - -	CMR Test	- - -	- - -

e. Do the same for the 1 V, 10 V, 100 V, and 1000 V ranges.

f. Set the 3456A to Autorange and remove the short.

g. Set the DC Transfer Standard for a + 10 V output and connect it to the 3456A's VOLTS input terminals. Make sure the "+" output is connected to the 3456A's VOLTS HIGH terminal.

h. Adjust the 3456A's calibration potentiometer "B" for a + 10.00000 V ± 1 count reading on the display. If "unable" to adjust to the required reading, go to the next step. If "able" to adjust to the required reading, go to Step j.

i. Do the following:

1. Turn calibration potentiometer "B" completely counterclockwise.

2. Turn adjustment "A" until the 3456A's reading is as close to + 10 V as possible. If the reading is higher than + 10.00000 V, turn adjustment "A" one position for a less than + 10 V reading.

3. Adjust calibration pot "B" for a + 10.00000 ± 1 count reading.

j. Set the Transfer Standard for a + 1 V output.

k. Adjust calibration pot "C" for a + 1.000000 V ± 1 count reading.

l. Disconnect the DC Transfer Standard from the 3456A's input.

m. Set the 3456A to the 100 mV (100 -3) range and short its input terminals.

n. Turn on the 3456A's Null Math feature. Remove the short after the instrument has taken a reading.

o. Using short pieces of number 20 AWG (or thinner) insulated solid copper wires, connect the Transfer Standard and the DC Null Voltmeter to the Reference Divider as shown in Figure 5-2 and 5-3.

p. Turn the DC Standard's output off. Using 24 inch or shorter shielded cables equipped with banana-plug connectors, connect the DC Standard and the 3456A to the Reference Divider as shown in Figure 5-2 and 5-3.

q. Set the Standard Cell Voltage switches on the Reference Divider to correspond with the output voltage setting of the Transfer Standard. Normally the Transfer Standard's switches should be set to the voltage value of the Standard Cell used to calibrate the Transfer Standard.

r. Zero the DC Null Voltmeter on the 3 microvolt range and then set it to the 300 microvolt range.

s. Set the Reference Divider's Input Voltage switch to 100 V and center its Coarse and Fine Adjust controls.

t. Set the Reference Divider's Output voltage switch to .1 V.

u. Set the DC Standard for an output voltage of + 100 V and turn its output on.

v. Set the Reference Divider's Standard Cell switch to the "Locked" position. Adjust the DC Standards Output for a zero reading on the DC Null Voltmeter.

w. Downrange the DC Null Voltmeter and adjust the Reference Divider's Coarse and Fine controls for a "Null" reading (0 reading) on the Null Voltmeter's 3 microvolt range.

x. Set the Reference Divider's Standard Cell switch to the OPEN position.

y. Set the Reference Divider's Standard Cell switch to MOMENTARY, and if necessary, readjust the Divider's Fine Control for a null indication on the Null Voltmeter. Release the Standard Cell switch.

NOTE

The Divider's Fine Control may have to be readjusted, when the Output Voltage switch is set to another position.

z. Adjust the 3456A's calibration pot "D" for a + 100.0000 -3 V ± 5 counts reading.

aa. Turn the 3456A's Math operation off.

bb. Uprange the 3456A to the 100 V range.

cc. Uprange the Reference Divider's Output Voltage switch to 100 V. Adjust the 3456A's calibration pot "E" for a + 100.0000 V ± 1 count reading.

CAUTION

Always uprange the Reference Divider's Input Voltage switch before upranging Standard before downranging the Reference Divider's Input Voltage switch.

dd. Uprange the Reference Divider Input Voltage switch to 1000 V and then uprange the DC Standard to + 1000 V. Allow about ten minutes for the Reference Divider to warm-up and stabilize.

ee. Uprange the 3456A to the 1000 V range. Uprange the Reference Divider's Output Voltage switch to 1000 V. Check the 3456A's reading.

ff. Downrange the DC Standard to + 10 V and then downrange the Reference Divider's Input Voltage switch to 10 V.

gg. Downrange the Reference Divider's Output Voltage switch to 1 V and set the 3456A to the 10 V range (take out of Autorange).

hh. Reverse the 3456A's input leads for a -1 V reading. Check the reading.

ii. Set the Reference Divider's Output Voltage switch to 5 V. Check the 3456A's reading.

jj. Turn the DC Standard's Output off and disconnect the DC Standard, Transfer Standard, and 3456A from the Reference Divider.

kk. Set the Transfer Standard for a 10 V output and connect it to the 3456A with the input leads reversed ("+" output to VOLTS LOW and "-" output to VOLTS HIGH). Check the reading.

11. Change the Number Of Power Line Cycles Integrated on the 3456A to 100 by entering a "100" into the N CYC INT register. Check the reading.

mm. Change the Number Of Power Line Cycles Integrated to 1, .1, .01 then to 10 by entering "1", ".1", ".01", and "10" into the N CYC INT register, respectively. Check readings.

nn. Turn the 3456A's Filter "ON" and check the reading.

oo. Turn the 3456A's Filter and Autozero "OFF". Check the reading.

pp. Press the RESET button on the 3456A and connect the Transfer Standard's High Output to the 3456A's RATIO REF HIGH and VOLTS HIGH terminals. Connect the Standard's Low Output to the 3456A's RATIO REF LOW and VOLTS LOW terminals. Refer to Figure 5-5 for the connection.

qq. Set the 3456A to the DCV/DCV Ration function. Check the reading.

rr. Disconnect the Transfer Standard from the 3456A and set the 3456A to the DCV function and 1 V range.

ss. Connect the 1 K resistor (-hp- Part Number 0698-1021) between the 3456A's VOLTS HIGH and VOLTS LOW terminals, as shown in Figure 5-6. Make sure the GUARD terminal is connected to the VOLTS HIGH terminal (Guard Switch "OUT").

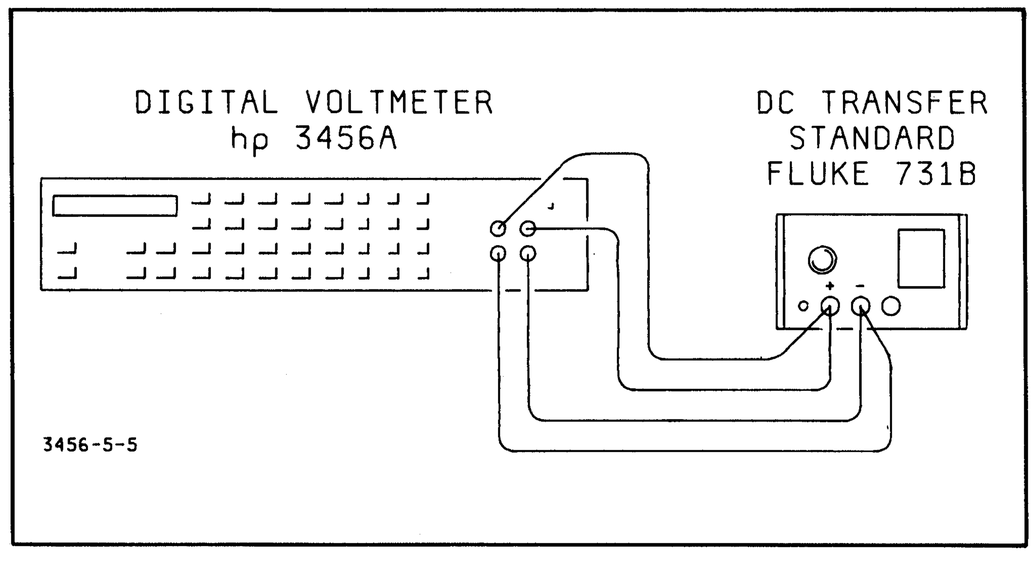

Figure 5-5. Ratio Test Connection.

tt. Record the 3456A's reading.

uu. With the DC Standard's Output off, connect it between the 3456A's chassis and VOLTS HIGH terminal, as shown in Figure 5-6.

vv. Set the DC Standard for a + 100 V output and turn its output on.

ww. The 3456A's reading should be within 0.000010 V of the recorded reading in Step tt.

xx. Disconnect the test equipment from the 3456A. This completes the DCV Test and Adjustments.

5-27. Ohms Test and Adjustment.

5-28. Refer to Table 5-3 for the Ohms Test and Adjustment Limits.

5-29.Equipment Required.

Standard Resistor:

(100 ohm ± .0005%; Guildline Model 9330/100)
(1 K ohm ± .0005%; Guildline Model 9330/1K)
(10 K ohm ± .001%; Guildline Model 9330/10K)
(100 K ohm ± .001%; Guildline Model 9330/100K)
(1 M ohm ± .002%; Guildline Model 9330/1 M)
10 M ohm ± .01%; Guildline Model 95206)

Resistor Assembly:

(1000 M ohm ± .2%; -hp- Part Number 03456-67902)

5-30. Test and Adjustment Procedure.

a. Press the 3456A's RESET button and set the instrument to the 6 Digit display and 2-Wire Ohms configuration.

b. Short the VOLTS and RATIO REF (4WRΩ SENSE) terminals as shown in Figure 5-7.

c. Check the 3456A's reading.

d. Set the 3456A to the 4-Wire Ohms function. Check the reading.

Table 5-3 Ohms Test and Adjustment Limits.

Step #	Input to 3456A	Set-Up and Configuration	Adjust Pot	Test Limits
1	Open	Press RESET	- - -	- - -
2	Open	Set to 6 dig. resolution	- - -	- - -
3	4-Wire Short	2-Wire Ohms	- - -	-00.0024 to 00.2024
4	4-Wire Short	4-Wire Ohms	- - -	-00.0024 to 00.0024
5	10 KΩ	4-Wire Ohms	F	9.99997 + 3 to 10.00003 + 3
6	1 KΩ	4-Wire Ohms	G	999.999 to 1000.001
7	100 Ω	4-Wire Ohms	- - -	99.9946 to 100.0054
8	100 KΩ	4-Wire Ohms	H	99.9999 + 3 to 100.0001 + 3
9	1 MΩ	4-Wire Ohms	I	999.999 + 3 to 1000.001 + 3
10	10 MΩ	4-Wire Ohms	J	9.99996 + 6 to 10.00004 + 6
11	1 MΩ	2-Wire Ohms	- - -	999.938 + 3 to 1000.062 + 3
12	10 KΩ	4-Wire Ohms 100 K Range	- - -	9.9996 + 3 to 10.0004 + 3
13	10 KΩ	Autozero Off	- - -	9.9994 + 3 to 10.0006 + 3
14	100 KΩ	Autozero On 2-Wire O.C.	- - -	99.9976 + 3 to 100.0024 + 3
15	100 KΩ	4-Wire O.C.	- - -	99.9978 + 3 to 100.0022 + 3

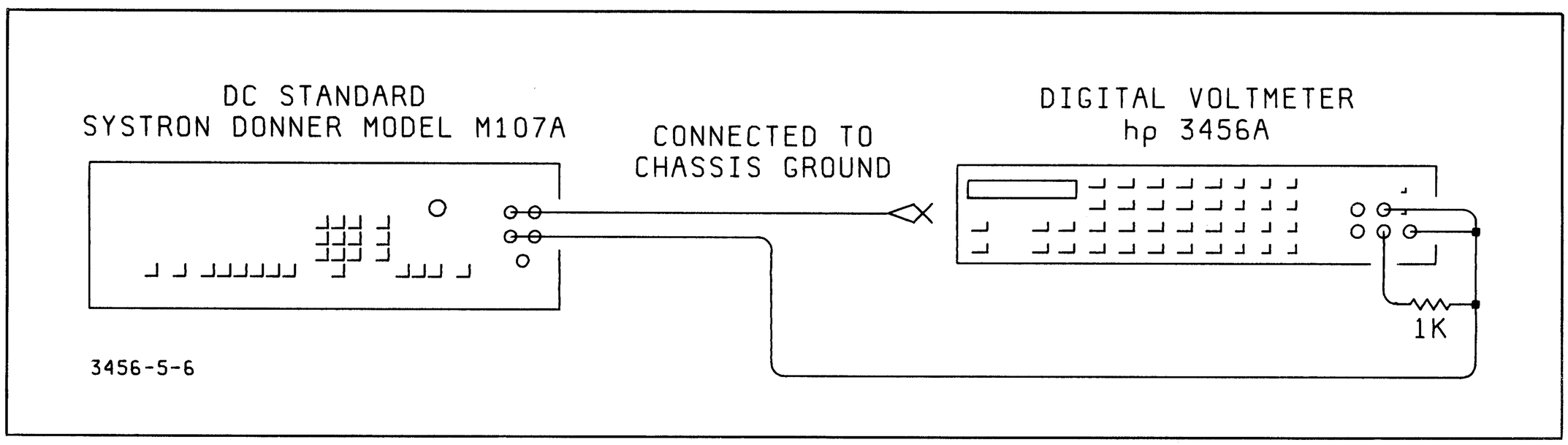

Figure 5-6. DC Common Mode Rejection Test.

e. Connect the 10 K ohm Standard Resistor to the 3456A's input terminals. Adjust calibration pot "F" for a 10.00000 + 3 ± 1 count reading. Refer to Figure 5-4 on how to connect the 10 K ohm and other Standard Resistors to the instrument.

f. Disconnect the 10 K ohm resistor from the 3456A and connect the 1 K ohm Standard Resistor to the input terminals. Adjust calibration pot "G" for a 1000.000 ± 1 count reading.

g. Disconnect the 1 K ohm resistor and connect the 100 ohm resistor to the input terminals. Check the reading.

h. Disconnect the 100 ohm Standard Resistor and connect the 100 K ohm Standard Resistor to the input terminals. Adjust calibration pot "H" for a 100.0000 + 3 ± 1 count reading.

i. Disconnect the 100 K ohm Standard Resistor and connect the 1 M ohm Standard Resistor to the input terminals. Adjust calibration pot "I" for a 1000.000 + 3 ± 1 count reading.

j. Disconnect the 1 M ohm Standard Resistor and connect the 10 M ohm Standard Resistor to the input terminals. Adjust calibration pot "J" for a 10.00000 + 6 ± 4 count reading.

k. Disconnect the 10 M ohm Standard Resistor and connect the 1000 M ohm Resistor Assembly to the input terminals. Check the reading.

l. Set the 3456A to the 2-Wire Ohms function and connect the 1 M ohm resistor to the input terminals. Check the reading.

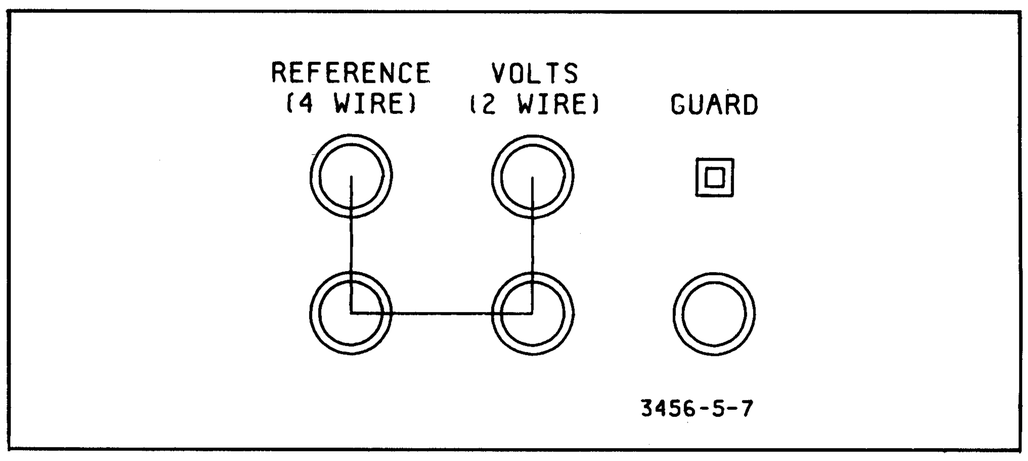

Figure 5-7. 4-Wire Ohms Short.

m. Set the 3456A to the 4-Wire Ohms function and the 100 K ohm range. Connect the 10 K ohm resistor to the input terminals and check the reading.

n. Disable the 3456A's Autozero feature. Check the reading.

o. Set the 3456A to the 2-Wire O.C. Ohms function and enable the Autozero feature. Connect the 100 K ohm resistor to the input terminals and check the reading.

p. Set the 3456A to the 4-Wire O.C. Ohms function. Check the reading.

q. Disconnect the 100 K ohm resistor from the 3456A. This completes the Ohms Test and Adjustments.

5-31. ACV Test and Adjustments.

5-32. Refer to Table 5-4 for the ACV Test and Adjustment Limits.

5-33. Equipment Required.

AC Calibrator (Fluke Model 5200A/5215A)
DC Standard (Systron Donner Model M107)

5-34. Test and Adjustment Procedure.

a. Press the 3456A's RESET button. Set the instrument to the ACV function.

b. Set the AC Calibrator for a 1 V, 1 kHz output and connect it to the 3456A's input terminals.

c. Set the 3456A to the 100 V range. Adjust calibration pot "K" for a 01.000 ± 1 count reading.

d. Set the 3456A to the 1 V range and adjust calibration pot "L" for a 1.00000 ± 3 counts reading.

e. Set the 3456A to the 1000 V range and adjust either calibration pot "M" or "N" for a 001.00 ± 2 counts reading.

f. Repeat Steps c, d, and e in the given order until all the readings are within the limits.

NOTE

Calibration pots "K", "L", and "M or N" interact with each other and should be adjusted until the readings converge.

g. Disconnect the AC Calibrator from the 3456A. Short the 3456A's input terminals.

h. Set the 3456A to the ACV + DCV function and the 1 V range. Adjust calibration pot "N" for a minimum reading.

i. Set the 3456A to the ACV function and do the following:

1. Note the 3456A's displayed reading.

Table 5-4. ACV Test and Adjustment Limits.

Step #	Input to 3456A	Set-Up and Configuration	Adjust Pot	Test Limits
1	Open	Press RESET	- - -	- - -
2	1 V, 1 kHz	ACV, 100 V Range	K	00.999 to 01.001
3	1 V, 1 kHz	1 V Range	L	.99997 to 1.00003
4	1 V, 1 kHz	1 kV Range	M or N	000.98 to 001.02
5	Short	ACV + DCV, 1 V Range	N	Minimum
6	Short	ACV	M	± 2 counts of reading in Step 5
7	.01 V DC	ACV + DCV, Autorange	- - -	.00943 to .01057
8	.01 V, 1 kHz	ACV	- - -	.00944 to .01056
9	.1 V, 1 kHz	ACV	- - -	.09940 to .10060
10	.5 V, 1 kHz	ACV	- - -	.49920 to .50080
11	1 V, 1 kHz	ACV	- - -	.99895 to 1.00105
12	10 V, 1 kHz	ACV	- - -	9.9895 to 10.0105
13	100 V, 1 kHz	ACV	- - -	99.895 to 100.105
14	700 V, 1 kHz	ACV	- - -	698.61 to 701.39
15	.01 V, 100 kHz	ACV	- - -	.00725 to .01275
16	1 V, 100 kHz	ACV	- - -	.99200 to 1.00800
17	10 V, 100 kHz	ACV	- - -	9.9200 to 10.0800
18	100 V, 100 kHz	ACV	- - -	99.200 to 100.800
19	700 V, 100 kHz	ACV	- - -	693.10 to 706.90
20	1 V, 250 kHz	ACV	- - -	.94370 to 1.05630
21	10 V, 250 kHz	ACV	- - -	9.4370 to 10.5630
22	1 V, 20 Hz	Filter On	- - -	.99640 to 1.00360
23	1 V, 20 Hz	ACV + DCV	- - -	.99640 to 1.00360
24	.01 V DC to REF H to V H and REF L to V L	Filter Off ACV + DCV/DCV Ratio	- - -	.99889 to 1.00111

2. Adjust calibration pot "M" for a minimum reading.

3. Continue adjusting calibration pot "M" in the same direction until the reading noted in Step 1 is reached (within ± 2 counts).

j. Repeat Steps h and i until both readings converge with each other (within ± 2 counts). Remove the short.

k. Set the 3456A to the ACV + DCV function and Autorange.

l. Set the DC Standard for a .01 V dc output and connect it to the 3456A's input terminals. Check the reading.

m. Remove the DC Standard. Set the AC Calibrator for a .01 V, 1 kHz output and connect it to the 3456A's input terminals.

n. Set the 3456A to the ACV function and check the reading.

o. Set the AC Calibrator to .1 V. Check the 3456A's reading.

p. Do the same for an AC Calibrator output of .5 V, 1 V, 10 V, 100 V, and 700 V.

q. Set the AC Calibrator for a .01 V, 100 kHz output. Check the reading.

r. Do the same for an AC Calibrator output of 1 V, 10 V, 100 V, and 1000 V.

s. Set the AC Calibrator for a 1 V, 250 kHz output. Check the reading.

t. Do the same for an AC Calibrator output of 10 V, 250 kHz.

u. Set the AC Calibrator for a 1 V, 20 Hz output and turn the 3456A's Filter "ON". Check the reading.

v. Set the 3456A to the ACV + DCV function. Check the reading.

w. Turn the 3456A's Filter "OFF" and disconnect the AC Calibrator from the input terminals.

x. Connect the DC Standard to the 3456A with its High output to the 3456A's RATIO REF HIGH and VOLTS HIGH terminals. Connects the Standard's Low output to the 3456A's RATIO REF LOW and VOLTS LOW terminals. Refer to Figure 5-5 for the connection.

y. Set the 3456A to ACV + DCV/DCV Ratio function. Check the reading.

z. Disconnect the test equipment from the 3456A. This completes the Combined Performance Test and Adjustments.

SECTION VI
REPLACEABLE PARTS

6-1. INTRODUCTION.

6-2. This section contains information for ordering replacement parts. Table 6-4 lists parts in alphameric order of their reference designators and indicates the description, -hp- Part Number of each part, together with any applicable notes, and provides the following:

a. Total quantity used in the instrument (Qty column). The total quantity of a part is given the first time the part number appears.

b. Description of the part. (See abbreviations listed in Table 6-1.)

c. Typical manufacturer of the part in a five-digit code. (See Table 6-2 for list of manufacturers.)

d. Manufacturers part number.

6-3. Miscellaneous parts are listed at the end of Table 6-4.

6-4. ORDERING INFORMATION.

6-5. To obtain replacement parts, address order or inquiry to your local Hewlett-Packard Field Office. (Field Office Locations are listed at the back of the Manual.) Identify parts by their Hewlett-Packard Part Numbers. Include instrument model and serial numbers.

6-6. NON-LISTED PARTS.

6-7. To obtain a part that is not listed, include:

a. Instrument Model Number
b. Instrument Serial Number
c. Description of the part
d. Function and location of the part

6-8. PARTS CHANGES.

6-9. Components which have been changed are so marked by one of three symbols; i.e., Δ, Δ with a letter subscript, e.g., Δ_a, or Δ with a number subscript, e.g., Δ_{10}. A Δ with no subscript indicates the component listed is the preferred replacement for an earlier component. A Δ with a letter subscript indicates a change which is explained in a note at the bottom of the page. A Δ with a number subscript indicates the related change is discussed in backdating (Section VII). The number of the subscript indicates the number of the change in backdating which should be referred to.

6-10. PROPRIETARY PARTS.

6-11. Items marked by a dagger (†) in the reference designator column are available only for repair and service of Hewlett-Packard Instruments.

Table 6-1. Standard Abbreviations.

ABBREVIATIONS

Ag	silver
Al	aluminum
A	ampere(s)
Au	gold
C	capacitor
cer	ceramic
coef	coefficient
com	common
comp	composition
conn	connection
dep	deposited
DPDT	double-pole double-throw
DPST	double-pole single-throw
elect	electrolytic
encap	encapsulated
F	farad(s)
FET	field effect transistor
fxd	fixed
GaAs	gallium arsenide
GHz	gigahertz = 10^{+9} hertz
gd	guard(ed)
Ge	germanium
gnd	ground(ed)
H	henry(ies)
Hg	mercury
Hz	hertz (cycle(s) per second)
ID	inside diameter
impg	impregnated
incd	incandescent
ins	insulation(ed)
kΩ	kilohm(s) = 10^{+3} ohms
kHz	kilohertz = 10^{+3} hertz
L	inductor
lin	linear taper
log	logarithmic taper
mA	milliampere(s) = 10^{-3} amperes
MHZ	megahertz = 10^{+6} hertz
MΩ	megohm(s) = 10^{+6} ohms
met flm	metal film
mfr	manufacturer
ms	millisecond
mtg	mounting
mV	millivolt(s) = 10^{-3} volts
μF	microfarad(s)
μs	microsecond(s)
μV	microvolt(s) = 10^{-6} volts
my	Mylar ®
nA	nanoampere(s) = 10_{-9} amperes
NC	normally closed
Ne	neon
NO	normally open
NPO	negative positive zero (zero temperature coefficient)
ns	nanosecond(s) = 10^{-9} seconds
nsr	not separately replaceable
Ω	ohm(s)
obd	order by description
OD	outside diameter
p	peak
pA	picoampere(s)
pc	printed circuit
pF	picofarad(s) 10^{-12} farads
piv	peak inverse voltage
p/o	part of
pos	position(s)
poly	polystyrene
pot	potentiometer
p-p	peak-to-peak
ppm	parts per million
prec	precision (temperature coefficient, long term stability and/or tolerance)
R	resistor
Rh	rhodium
rms	root-mean-square
rot	rotary
Se	selenium
sect	section(s)
Si	silicon
sl	slide
SPDT	single-pole double-throw
SPST	single-pole single-throw
Ta	tantalum
TC	temperature coefficient
TiO_2	titanium dioxide
tog	toggle
tol	tolerance
trim	trimmer
TSTR	transistor
V	volt(s)
vacw	alternating current working voltage
var	variable
vdcw	direct current working voltage
W	watt(s)
w/	with
wiv	working inverse voltage
w/o	without
ww	wirewound
*	optimum value selected at factory, average value shown (part may be omitted)
**	no standard type number assigned selected or special type
®	Dupont de Nemours

DESIGNATORS

A	assembly
B	motor
BT	battery
C	capacitor
CR	diode or thyristor
DL	delay line
DS	lamp
E	misc electronic part
F	fuse
FL	filter
HR	heater
IC	integrated circuit
J	jack
K	relay
L	inductor
M	meter
MP	mechanical part
P	plug
Q	transistor
QCR	transistor-diode
R(p)	resistor(pack)
RT	thermistor
S	switch
T	transformer
TB	terminal board
TC	thermocouple
TP	test point
TS	terminal strip
U	microcircuit
V	vacuum tube, neon bulb, photocell, etc.
W	cable
X	socket
XDS	lampholder
XF	fuseholder
Y	crystal
Z	network

Table 6-2. Code List of Manufacturers.

Manufacturer Number	Manufacturer Name	Address
H9027	Schurter AGH	Luzern, Switzerland
00000	Any Satisfactory Supplier	
01121	Allen-Bradley Co.	Milwaukee, WI 53204
01295	Texas Instr Inc. Semicond Cmpnt Div.	Dallas, TX 75222
01928	RCA Corp Solid State Div.	Somerville, NJ 08876
02111	Spectrol Electronics Corp.	City of Ind, CA 91745
03888	KDI Pyrofilm Corp.	Whippany, NJ 07981
04713	Motorola Semiconductor Products	Phoenix, AZ 85062
07263	Fairchild Semiconductor Div.	Mountain View, CA 94042
07716	TRW Inc. Burlington Div.	Burlington, IA 52601
17856	Siliconix Inc.	Santa Clara, CA 95054
18324	Signetics Corp.	Sunnyvale, CA 94086
19701	Mepco/Electra Corp.	Mineral Wells, TX 76067
20940	Micro-Ohm Corp.	El Monte, CA 91731
22229	Solitron Devices Inc. (FETS ICS)	San Diego, CA 92123
24546	Corning Glass Works (Bradford)	Bradford, PA 16701
27014	National Semiconductor Corp.	Santa Clara, CA 95051
27167	Corning Glass Works (Wilmington)	Wilmington, NC 28401
28480	Hewlett-Packard Co Corporate HQ	Palo Alto, CA 94304
32293	Intersil Inc.	Cupertino, CA 95014
34371	Harris Semicon Div. Harris-Intertype	Melbourne, FL 32901
34649	Intel Corp.	Mountain View, CA 95051
56289	Sprague Electric Co.	North Adams, MA 01247
72136	Electro Motive Corp. Sub IEC	Williamantic, CT 06226
72982	Erie Technological Products Inc.	Erie, PA 16512

Table 6-3. Exchange Assemblies.

Assembly	Description	Part Number for New Assembly	Part Number for Exchange Assembly
A3	Outguard Interface Logic	03456-66503	03456-69503
A4	Main Outguard Logic	03456-66504	03456-69504
A20	Inguard DC-Ohms-A/D Converter Note: Includes A21 and A25	03456-66590	03456-69590
A30	Inguard Logic	03456-66530	03456-69530
A40	AC Converter	03456-66540	03456-69540

6-12. EXCHANGE ASSEMBLIES.

6-13. Exchange assemblies are factory repaired and tested assemblies and are available only on a trade-in basis; therefore, the defective assembly must be returned for credit. For this reason, assemblies required for spare parts stock must be ordered by the new assembly part number listed in Table 6-4.

6-14. Most of the plug-in assemblies that contain active components are available under the exchange program. This allows service to be performed by assembly replacement. Refer to Table 6-3 for the assemblies that may be replaced on an exchange basis.

6-15. SERVICE KITS.

6-16. Three service kits are available to aid in the repair of the 3456A.

1. **Service Kit—Component Level Repair.** This kit includes service aids and selected spare components necessary for efficient component level repair. The part number of this service kit is 03456-69800.

2. **Service Kit—Assembly Level Repair.** This kit includes a set of all PC assemblies that contain active components. This kit is designed to allow assembly level repair when used in conjunction with the exchange assembly program described in Paragraph 6-12. The part number of this service kit is 03456-69801.

3. **Replacement Component Inventory.** This kit contains a selected set of spare components that are most prone to failure. The kit does not include any service aids or carrying case. This kit may be purchased to obtain a larger inventory of spare components than is supplied with the component level repair service kit or to replenish depleted inventories without the need to order the components individually or purchase extra servicing aids. The part number of this kit is 03456-69802.

Table 6-4. Replaceable Parts.

Reference Designation	HP Part Number	C D	Qty	Description	Mfr Code	Mfr Part Number
A1	03456-66501	6	1	PC ASSEMBLY-HP-IB	28480	03456-66501
A1J1	1251-5971	8	1	CONNECTOR 3-PIN M METRIC POST TYPE	28480	1251-5971
A1J2	1251-3841	7	1	CONNECTOR 24-PIN F AMP CHAMP	28480	1251-3841
A1P1	1251-4933	0	1	CONNECTOR HOUSING-0-PIN LOCKING	28480	1251-4933
	1251-6066	4	3	CONNECTOR CRIMP	28480	1251-6066
A1S1	3101-1973	7	1	SWITCH-SL 7-1A DIP-SLIDE-ASSY .1A 50VDC	28480	3101-1973
A1W1	8120-3041	9	1	CABLE ASSEMBLY-HP-IB	28480	8120-3041
	0380-1214	6	2	STANDOFF-HEX 6.8-MM-LG 7-MM-A/F STL	28480	0380-1214
A2	03456-66502	7	1	PC ASSEMBLY-DISPLAY AND KEYBOARD	28480	03456-66502
A2CR1	1990-0665	3	33	LED-VISIBLE LUM-INT=1MCD IF=20MA-MAX	28480	1990-0665
A2CR2	1990-0665	3		LED-VISIBLE LUM-INT=1MCD IF=20MA-MAX	28480	1990-0665
A2CR3	1990-0665	3		LED-VISIBLE LUM-INT=1MCD IF=20MA-MAX	28480	1990-0665
A2CR4	1990-0665	3		LED-VISIBLE LUM-INT=1MCD IF=20MA-MAX	28480	1990-0665
A2CR5	1990-0665	3		LED-VISIBLE LUM-INT=1MCD IF=20MA-MAX	28480	1990-0665
A2CR6	1990-0665	3		LED-VISIBLE LUM-INT=1MCD IF=20MA-MAX	28480	1990-0665
A2CR7	1990-0665	3		LED-VISIBLE LUM-INT=1MCD IF=20MA-MAX	28480	1990-0665
A2CR8	1990-0665	3		LED-VISIBLE LUM-INT=1MCD IF=20MA-MAX	28480	1990-0665
A2CR9	1990-0665	3		LED-VISIBLE LUM-INT=1MCD IF=20MA-MAX	28480	1990-0665
A2CR10	1990-0665	3		LED-VISIBLE LUM-INT=1MCD IF=20MA-MAX	28480	1990-0665
A2CR11	1990-0665	3		LED-VISIBLE LUM-INT=1MCD IF=20MA-MAX	28480	1990-0665
A2CR12	1990-0665	3		LED-VISIBLE LUM-INT=1MCD IF=20MA-MAX	28480	1990-0665
A2CR13	1990-0665	3		LED-VISIBLE LUM-INT=1MCD IF=20MA-MAX	28480	1990-0665
A2CR14	1990-0665	3		LED-VISIBLE LUM-INT=1MCD IF=20MA-MAX	28480	1990-0665
A2CR15	1990-0665	3		LED-VISIBLE LUM-INT=1MCD IF=20MA-MAX	28480	1990-0665
A2CR16	1990-0665	3		LED-VISIBLE LUM-INT=1MCD IF=20MA-MAX	28480	1990-0665
A2CR17	1990-0665	3		LED-VISIBLE LUM-INT=1MCD IF=20MA-MAX	28480	1990-0665
A2CR18	1990-0665	3		LED-VISIBLE LUM-INT=1MCD IF=20MA-MAX	28480	1990-0665
A2CR19	1990-0665	3		LED-VISIBLE LUM-INT=1MCD IF=20MA-MAX	28480	1990-0665
A2CR20	1990-0665	3		LED-VISIBLE LUM-INT=1MCD IF=20MA-MAX	28480	1990-0665
A2CR21	1990-0665	3		LED-VISIBLE LUM-INT=1MCD IF=20MA-MAX	28480	1990-0665
A2CR22	1990-0665	3		LED-VISIBLE LUM-INT=1MCD IF=20MA-MAX	28480	1990-0665
A2CR23	1990-0665	3		LED-VISIBLE LUM-INT=1MCD IF=20MA-MAX	28480	1990-0665
A2CR24	1990-0665	3		LED-VISIBLE LUM-INT=1MCD IF=20MA-MAX	28480	1990-0665
A2CR25	1990-0665	3		LED-VISIBLE LUM-INT=1MCD IF=20MA-MAX	28480	1990-0665
A2CR26	1990-0665	3		LED-VISIBLE LUM-INT=1MCD IF=20MA-MAX	28480	1990-0665
A2CR27	1990-0665	3		LED-VISIBLE LUM-INT=1MCD IF=20MA-MAX	28480	1990-0665
A2CR28	1990-0665	3		LED-VISIBLE LUM-INT=1MCD IF=20MA-MAX	28480	1990-0665
A2CR29	1990-0665	3		LED-VISIBLE LUM-INT=1MCD IF=20MA-MAX	28480	1990-0665
A2CR30	1990-0665	3		LED-VISIBLE LUM-INT=1MCD IF=20MA-MAX	28480	1990-0665
A2CR31	1990-0665	3		LED-VISIBLE LUM-INT=1MCD IF=20MA-MAX	28480	1990-0665
A2CR32	1990-0665	3		LED-VISIBLE LUM-INT=1MCD IF=20MA-MAX	28480	1990-0665
A2CR33	1990-0665	3		LED-VISIBLE LUM-INT=1MCD IF=20MA-MAX	28480	1990-0665
A2DS1	1990-0649	3	2	DISPLAY-NUM-SEG	28480	5082-7616
A2DS2	1990-0730	3	7	DISPLAY-NUM-SEG 1-CHAR .3-H RED	28480	5082-7611
A2DS3	1990-0730	3		DISPLAY-NUM-SEG 1-CHAR .3-H RED	28480	5082-7611
A2DS4	1990-0730	3		DISPLAY-NUM-SEG 1-CHAR .3-H RED	28480	5082-7611
A2DS5	1990-0730	3		DISPLAY-NUM-SEG 1-CHAR .3-H RED	28480	5082-7611
A2DS6	1990-0730	3		DISPLAY-NUM-SEG 1-CHAR .3-H RED	28480	5082-7611
A2DS7	1990-0730	3		DISPLAY-NUM-SEG 1-CHAR .3-H RED	28480	5082-7611
A2DS8	1990-0649	3		DISPLAY-NUM-SEG	28480	5082-7616
A2DS9	1990-0730	3		DISPLAY-NUM-SEG 1-CHAR .3-H RED	28480	5082-7611
A2S1	5060-9436	7	37	PUSHBUTTON SWITCH P.C. MOUNT	28480	5060-9436
A2S2	5060-9436	7		PUSHBUTTON SWITCH P.C. MOUNT	28480	5060-9436
A2S3	5060-9436	7		PUSHBUTTON SWITCH P.C. MOUNT	28480	5060-9436
A2S4	5060-9436	7		PUSHBUTTON SWITCH P.C. MOUNT	28480	5060-9436
A2S5	5060-9436	7		PUSHBUTTON SWITCH P.C. MOUNT	28480	5060-9436
A2S6	5060-9436	7		PUSHBUTTON SWITCH P.C. MOUNT	28480	5060-9436
A2S7	5060-9436	7		PUSHBUTTON SWITCH P.C. MOUNT	28480	5060-9436
A2S8	5060-9436	7		PUSHBUTTON SWITCH P.C. MOUNT	28480	5060-9436
A2S9	5060-9436	7		PUSHBUTTON SWITCH P.C. MOUNT	28480	5060-9436
A2S10	5060-9436	7		PUSHBUTTON SWITCH P.C. MOUNT	28480	5060-9436
A2S11	5060-9436	7		PUSHBUTTON SWITCH P.C. MOUNT	28480	5060-9436
A2S12	5060-9436	7		PUSHBUTTON SWITCH P.C. MOUNT	28480	5060-9436
A2S13	5060-9436	7		PUSHBUTTON SWITCH P.C. MOUNT	28480	5060-9436
A2S14	5060-9436	7		PUSHBUTTON SWITCH P.C. MOUNT	28480	5060-9436
A2S15	5060-9436	7		PUSHBUTTON SWITCH P.C. MOUNT	28480	5060-9436
A2S16	5060-9436	7		PUSHBUTTON SWITCH P.C. MOUNT	28480	5060-9436
A2S17	5060-9436	7		PUSHBUTTON SWITCH P.C. MOUNT	28480	5060-9436
A2S18	5060-9436	7		PUSHBUTTON SWITCH P.C. MOUNT	28480	5060-9436
A2S19	5060-9436	7		PUSHBUTTON SWITCH P.C. MOUNT	28480	5060-9436
A2S20	5060-9436	7		PUSHBUTTON SWITCH P.C. MOUNT	28480	5060-9436

See introduction to this section for ordering information
*Indicates factory selected value

Table 6-4. Replaceable Parts (Cont'd).

Reference Designation	HP Part Number	C D	Qty	Description	Mfr Code	Mfr Part Number
A2S21	5060-9436	7		PUSHBUTTON SWITCH P.C. MOUNT	28480	5060-9436
A2S22	5060-9436	7		PUSHBUTTON SWITCH P.C. MOUNT	28480	5060-9436
A2S23	5060-9436	7		PUSHBUTTON SWITCH P.C. MOUNT	28480	5060-9436
A2S24	5060-9436	7		PUSHBUTTON SWITCH P.C. MOUNT	28480	5060-9436
A2S25	5060-9436	7		PUSHBUTTON SWITCH P.C. MOUNT	28480	5060-9436
A2S26	5060-9436	7		PUSHBUTTON SWITCH P.C. MOUNT	28480	5060-9436
A2S27	5060-9436	7		PUSHBUTTON SWITCH P.C. MOUNT	28480	5060-9436
A2S28	5060-9436	7		PUSHBUTTON SWITCH P.C. MOUNT	28480	5060-9436
A2S29	5060-9436	7		PUSHBUTTON SWITCH P.C. MOUNT	28480	5060-9436
A2S30	5060-9436	7		PUSHBUTTON SWITCH P.C. MOUNT	28480	5060-9436
A2S31	5060-9436	7		PUSHBUTTON SWITCH P.C. MOUNT	28480	5060-9436
A2S32	5060-9436	7		PUSHBUTTON SWITCH P.C. MOUNT	28480	5060-9436
A2S33	5060-9436	7		PUSHBUTTON SWITCH P.C. MOUNT	28480	5060-9436
A2S34	5060-9436	7		PUSHBUTTON SWITCH P.C. MOUNT	28480	5060-9436
A2S35	5060-9436	7		PUSHBUTTON SWITCH P.C. MOUNT	28480	5060-9436
A2S36	5060-9436	7		PUSHBUTTON SWITCH P.C. MOUNT	28480	5060-9436
A2S37	5060-9436	7		PUSHBUTTON SWITCH P.C. MOUNT	28480	5060-9436
A2W2	8120-3042	0	1	CABLE ASSEMBLY-DISPLAY	28480	8120-3042
A2X1	1200-0508	0	9	SOCKET-IC 14-CONT DIP-SLDR	28480	1200-0508
A2X2	1200-0508	0		SOCKET-IC 14-CONT DIP-SLDR	28480	1200-0508
A2X3	1200-0508	0		SOCKET-IC 14-CONT DIP-SLDR	28480	1200-0508
A2X4	1200-0508	0		SOCKET-IC 14-CONT DIP-SLDR	28480	1200-0508
A2X5	1200-0508	0		SOCKET-IC 14-CONT DIP-SLDR	28480	1200-0508
A2X6	1200-0508	0		SOCKET-IC 14-CONT DIP-SLDR	28480	1200-0508
A2X7	1200-0508	0		SOCKET-IC 14-CONT DIP-SLDR	28480	1200-0508
A2X8	1200-0508	0		SOCKET-IC 14-CONT DIP-SLDR	28480	1200-0508
A2X9	1200-0508	0		SOC ETKIC 14-CONT DIP-S DRL	28480	1200-0508
				A2 MISCELLANEOUS PARTS		
	5041-0994	4	2	KEY CAP-UP RANGE	28480	5041-0994
	5041-1736	4	1	KEY CAP-AC+DC	28480	5041-1736
	5041-1792	2	1	KEY CAP-LOCAL	28480	5041-1792
	5041-1846	7	1	KEY CAP-CHS	28480	5041-1846
	5041-1847	8	1	KEY CAP-PERIOD	28480	5041-1847
	5041-1848	9	2	KEY CAP-1	28480	5041-1848
	5041-1849	0	1	KEY CAP-2	28480	5041-1849
	5041-1850	3	1	KEY CAP-3	28480	5041-1850
	5041-1851	4	1	KEY CAP-4	28480	5041-1851
	5041-1852	5	1	KEY CAP-5	28480	5041-1852
	5041-1853	6	2	KEY CAP-6	28480	5041-1853
	5041-1854	7	1	KEY CAP-7	28480	5041-1854
	5041-1855	8	1	KEY CAP-8	28480	5041-1855
	5041-1856	9	1	KEY CAP-0	28480	5041-1856
	5041-1857	0	1	KEY CAP-SRQ	28480	5041-1857
	5041-1858	1	1	KEY CAP-FILTER	28480	5041-1858
	5041-1859	2	1	KEY CAP-DCV	28480	5041-1859
	5041-1860	5	1	KEY CAP-AC VOLTS	28480	5041-1860
	5041-1861	6	1	KEY CAP-2WR OHM	28480	5041-1861
	5041-1862	7	1	KEY CAP-4WR OHM	28480	5041-1862
	5041-1863	8	1	KEY CAP-TEST	28480	5041-1863
	5041-1864	9	1	KEY CAP-INT	28480	5041-1864
	5041-1865	0	1	KEY CAP-MATH	28480	5041-1865
	5041-1866	1	1	KEY CAP-AUTO ZERO	28480	5041-1866
	5041-1867	2	1	KEY CAP-ENTER EXP	28480	5041-1867
	5041-1868	3	1	KEY CAP-CLR, CONT	28480	5041-1868
	5041-1869	4	1	KEY CAP-STORE	28480	5041-1869
	5041-1870	7	1	KEY CAP-RECALL	28480	5041-1870
	5041-1871	8	1	KEY CAP-SHIFT	28480	5041-1871
	5041-1872	9	1	KEY CAP-SINGLE	28480	5041-1872
	5041-1873	0	1	KEY CAP-RESET	28480	5041-1873
	5041-1874	1	1	KEY CAP-EXT	28480	5041-1874
	5041-1875	2	1	KEY CAP-AUTO	28480	5041-1875
	5041-1876	3	1	KEY CAP-HOLD	28480	5041-1876
	5041-1927	5	1	KEY CAP-RDG STOR	28480	5041-1927
A3	03456-66503	8	1	PC ASSEMBLY-OUTGUARD LOGIC, PWR SUPPLY	28480	03456-66503
A3C1	0180-0309	4	20	CAPACITOR-FXD 4.7UF+-20% 10VDC TA	56289	150D475X0010A2
A3C2	0180-0309	4		CAPACITOR-FXD 4.7UF+-20% 10VDC TA	56289	150D475X0010A2
A3C3	0160-2209	5	1	CAPACITOR-FXD 360PF +-5% 300VDC MICA	28480	0160-2209
A3C4	0180-0309	4		CAPACITOR-FXD 4.7UF+-20% 10VDC TA	56289	150D475X0010A2
A3C5	0180-0309	4		CAPACITOR-FXD 4.7UF+-20% 10VDC TA	56289	150D475X0010A2
A3C6	0180-3031	5	1	CAPACITOR-FXD .012F+75-10% 16VDC AL	28480	0180-3031
A3C7	0160-4571	8	10	CAPACITOR-FXD .1UF +80-20% 50VDC CER	28480	0160-4571
A3C8	0160-4571	8		CAPACITOR-FXD .1UF +80-20% 50VDC CER	28480	0160-4571
A3C9	0160-2055	9	1	CAPACITOR-FXD .01UF +80-20% 100VDC CER	28480	0160-2055

See introduction to this section for ordering information
*Indicates factory selected value

Table 6-4. Replaceable Parts (Cont'd).

Reference Designation	HP Part Number	C D	Qty	Description	Mfr Code	Mfr Part Number
A3CR1	1901-0050	3	18	DIODE-SWITCHING 80V 200MA 2NS DO-35	28480	1901-0050
A3CR2	1901-0050	3		DIODE-SWITCHING 80V 200MA 2NS DO-35	28480	1901-0050
A3CR3	1901-0050	3		DIODE-SWITCHING 80V 200MA 2NS DO-35	28480	1901-0050
A3CR4	1901-0050	3		DIODE-SWITCHING 80V 200MA 2NS DO-35	28480	1901-0050
A3E1	0360-1930	1	15	BUS 2 CONDUCTOR	28480	0360-1930
A3E2	0360-1930	1		BUS 2 CONDUCTOR	28480	0360-1930
A3E3	0360-1930	1		BUS 2 CONDUCTOR	28480	0360-1930
A3E4	0360-1930	1		BUS 2 CONDUCTOR	28480	0360-1930
A3E5	0360-1930	1		BUS 2 CONDUCTOR	28480	0360-1930
A3E6	0360-1930	1		BUS 2 CONDUCTOR	28480	0360-1930
A3J7	1251-4349	2	1	CONNECTOR 4-PIN M POST TYPE	28480	1251-4349
A3P5	1251-6061	9	4	CONNECTOR 15-PIN F POST TYPE	28480	1251-6061
A3P6	1251-6061	9		CONNECTOR 15-PIN F POST TYPE	28480	1251-6061
A3P8	1251-3961	2	1	CONNECTOR 6-PIN F POST TYPE	28480	1251-3961
A3R1	0683-1025	9	16	RESISTOR 1K 5% .25W FC TC=-400/+600	01121	CB1025
A3R2	0683-2225	3	6	RESISTOR 2.2K 5% .25W FC TC=-400/+700	01121	CB2225
A3R3	0698-3615	8	2	RESISTOR 47 5% 2W MO TC=0+-200	27167	FP42-2-T00-47R0-J
A3R4	0683-1035	1	34	RESISTOR 10K 5% .25W FC TC=-400/+700	01121	CB1035
A3R5	0698-3615	8		RESISTOR 47 5% 2W MO TC=0+-200	27167	FP42-2-T00-47R0-J
A3R6	0683-1025	9		RESISTOR 1K 5% .25W FC TC=-400/+600	01121	CB1025
A3R7	0683-1025	9		RESISTOR 1K 5% .25W FC TC=-400/+600	01121	CB1025
A3R8	0683-1035	1		RESISTOR 10K 5% .25W FC TC=-400/+700	01121	CB1035
A3R9	0683-1035	1		RESISTOR 10K 5% .25W FC TC=-400/+700	01121	CB1035
A3R10	0683-1035	1		RESISTOR 10K 5% .25W FC TC=-400/+700	01121	CB1035
A3R11	0683-1035	1		RESISTOR 10K 5% .25W FC TC=-400/+700	01121	CB1035
A3R12	0683-1035	1		RESISTOR 10K 5% .25W FC TC=-400/+700	01121	CB1035
A3R13	0683-1035	1		RESISTOR 10K 5% .25W FC TC=-400/+700	01121	CB1035
A3R14	0698-4485	2		RESISTOR 23.2K 1% .125W F TC=0+-100	24546	C4-1/8-T0-2322-F
A3R15	0698-4485	2		RESISTOR 23.2K 1% .125W F TC=0+-100	24546	C4-1/8-T0-2322-F
A3R16	0698-3228	9		RESISTOR 49.9K 1% .125W F TC=0+-100	28480	0698-3228
A3R17	0683-2225	3		RESISTOR 2.2K 5% .25W FC TC=-400/+700	01121	CB2225
A3R18	0683-1025	9		RESISTOR 1K 5% .25W FC TC=-400/+600	01121	CB1025
A3R19	0683-3325	6	4	RESISTOR 3.3K 5% .25W FC TC=-400/+700	01121	CB3325
A3R20	0683-2225	3		RESISTOR 2.2K 5% .25W FC TC=-400/+700	01121	CB2225
A3R21	0683-3325	6		RESISTOR 3.3K 5% .25W FC TC=-400/+700	01121	CB3325
A3R22	0683-1035	1		RESISTOR 10K 5% .25W FC TC=-400/+700	01121	CB1035
A3R23	0683-1025	9		RESISTOR 1K 5% .25W FC TC=-400/+600	01121	CB1025
A3R24	0683-1035	1		RESISTOR 10K 5% .25W FC TC=-400/+700	01121	CB1035
A3R25	0683-1025	9		RESISTOR 1K 5% .25W FC TC=-400/+600	01121	CB1025
A3T1	9100-2616	1	4	TRANSFORMER-PULSE BIFILAR WOUND, 18.0 MM	28480	9100-2616
A3T2	9100-2616	1		TRANSFORMER-PULSE BIFILAR WOUND, 18.0 MM	28480	9100-2616
A3U1	1820-1430	3	2	IC CNTR TTL LS BIN SYNCHRO POS-EDGE-TRIG	01295	SN74LS161AN
A3U2	1820-1199	1	6	IC INV TTL LS HEX 1-INP	01295	SN74LS04N
A3U3	1820-1197	9	7	IC GATE TTL LS NAND QUAD 2-INP	01295	SN74LS00N
A3U4	1820-1416	5	2	IC SCHMITT-TRIG TTL LS INV HEX 1-INP	01295	SN74LS14N
A3U5	1820-1112	8	10	IC FF TTL LS D-TYPE POS-EDGE-TRIG	01295	SN74LS74AN
A3U6	1820-1199	1		IC INV TTL LS HEX 1-INP	01295	SN74LS04N
A3U7	1820-2058	3	4	IC MISC TTL S QUAD	28480	1820-2058
A3U8	1820-2058	3		IC MISC TTL S QUAD	28480	1820-2058
A3U9	1820-2428	1	1	HP-IB MC68A488P	28480	1820-2428
A3U10	1820-1975	1	2	IC SHF-RGTR TTL LS NEG-EDGE-TRIG PRL-IN	01295	SN74LS165N
A3U11	1820-1212	9	2	IC FF TTL LS J-K NEG-EDGE-TRIG	01295	SN74LS112AN
A3U12	1820-2058	3		IC MISC TTL S QUAD	28480	1820-2058
A3U13	1820-1144	6	6	IC GATE TTL LS NOR QUAD 2-INP	01295	SN74LS02N
A3U14	1820-2058	3		IC MISC TTL S QUAD	28480	1820-2058
A3U15	1820-1112	8		IC FF TTL LS D-TYPE POS-EDGE-TRIG	01295	SN74LS74AN
A3U16	1820-1759	9	4	IC BFR TTL LS NON-INV OCTL	27014	DM81LS97N
A3U17	1820-1212	9		IC FF TTL LS J-K NEG-EDGE-TRIG	01295	SN74LS112AN
A3U18	1858-0054	4	2	TRANSISTOR ARRAY 14-PIN PLSTC DIP	28480	1858-0054
A3U19	1820-0514	2	2	IC GATE TTL NAND QUAD 2-INP	01295	SN7426N
A3U20	1820-1759	9		IC BFR TTL LS NON-INV OCTL	27014	DM81LS97N
A3U21	1821-0001	4	2	TRANSISTOR ARRAY 14-PIN PLSTC DIP	01928	CA3046
A3U22	1820-1433	6	2	IC SHF-RGTR TTL LS R-S SERIAL-IN PRL-OUT	01295	SN74LS164N
A3X9	1200-0659	2	3	SOCKET-IC 40-CONT DIP-SLDR	28480	1200-0659
A4	03456-66504	9	1	PC ASSEMBLY-MAIN CONTROLLER, DISPLAY DR.	28480	03456-66504

See introduction to this section for ordering information
*Indicates factory selected value

Table 6-4. Replaceable Parts (Cont'd).

Reference Designation	HP Part Number	C D	Qty	Description	Mfr Code	Mfr Part Number
A4C1	0180-0309	4		CAPACITOR-FXD 4.7UF+-20% 10VDC TA	56289	150D475X0010A2
A4C2	0180-0309	4		CAPACITOR-FXD 4.7UF+-20% 10VDC TA	56289	150D475X0010A2
A4C3	0180-0309	4		CAPACITOR-FXD 4.7UF+-20% 10VDC TA	56289	150D475X0010A2
A4C4	0140-0196	3	2	CAPACITOR-FXD 150PF +-5% 300VDC MICA	72136	DM15F151J0300WV1CR
A4C5	0180-0309	4		CAPACITOR-FXD 4.7UF+-20% 10VDC TA	56289	150D475X0010A2
A4C6	0180-0291	3	5	CAPACITOR-FXD 1UF+-10% 35VDC TA	56289	150D105X9035A2
A4C7	0180-1743	2	1	CAPACITOR-FXD .1UF+-10% 35VDC TA	56289	150D104X9035A2
A4C8	0180-0309	4		CAPACITOR-FXD 4.7UF+-20% 10VDC TA	56289	150D475X0010A2
A4C9	0180-0309	4		CAPACITOR-FXD 4.7UF+-20% 10VDC TA	56289	150D475X0010A2
A4C10	0180-0309	4		CAPACITOR-FXD 4.7UF+-20% 10VDC TA	56289	150D475X0010A2
A4C11	0180-0309	4		CAPACITOR-FXD 4.7UF+-20% 10VDC TA	56289	150D475X0010A2
A4C12	0180-0309	4		CAPACITOR-FXD 4.7UF+-20% 10VDC TA	56289	150D475X0010A2
A4CR1	1901-0050	3		DIODE-SWITCHING 80V 200MA 2NS DO-35	28480	1901-0050
A4CR2	1901-0050	3		DIODE-SWITCHING 80V 200MA 2NS DO-35	28480	1901-0050
A4CR3	1901-0050	3		DIODE-SWITCHING 80V 200MA 2NS DO-35	28480	1901-0050
A4CR4	1901-0050	3		DIODE-SWITCHING 80V 200MA 2NS DO-35	28480	1901-0050
A4CR5	1901-0050	3		DIODE-SWITCHING 80V 200MA 2NS DO-35	28480	1901-0050
A4CR6	1901-0050	3		DIODE-SWITCHING 80V 200MA 2NS DO-35	28480	1901-0050
A4CR7	1901-0050	3		DIODE-SWITCHING 80V 200MA 2NS DO-35	28480	1901-0050
A4E1	0360-1930	1		BUS 2 CONDUCTOR	28480	0360-1930
A4E2	0360-1930	1		BUS 2 CONDUCTOR	28480	0360-1930
A4E3	0360-1930	1		BUS 2 CONDUCTOR	28480	0360-1930
A4E4	0360-1930	1		BUS 2 CONDUCTOR	28480	0360-1930
A4E5	1810-0307	0	1	NETWORK-CNDCT MODULE DIP; 16 PINS; 0.100	28480	1810-0307
A4E6	0360-1930	1		BUS 2 CONDUCTOR	28480	0360-1930
A4E7	0360-1930	1		BUS 2 CONDUCTOR	28480	0360-1930
A4E8	0360-1930	1		BUS 2 CONDUCTOR	28480	0360-1930
A4E9	0360-1930	1		BUS 2 CONDUCTOR	28480	0360-1930
A4E10	0360-1930	1		BUS 2 CONDUCTOR	28480	0360-1930
A4J9	1251-4682	6	9	CONNECTOR 3-PIN M POST TYPE	28480	1251-4682
A4J10	1251-4682	6		CONNECTOR 3-PIN M POST TYPE	28480	1251-4682
A4J11	1251-4682	6		CONNECTOR 3-PIN M POST TYPE	28480	1251-4682
A4J12	1251-4682	6		CONNECTOR 3-PIN M POST TYPE	28480	1251-4682
A4L1	9100-1617	0	1	INDUCTORRF-CH-MLD 3.9UH 10%	28480	9100-1617
A4P5	1251-6061	9		CONNECTOR 15-PIN F POST TYPE	28480	1251-6061
A4P6	1251-6061	9		CONNECTOR 15-PIN F POST TYPE	28480	1251-6061
A4P9	1258-0141	8	8	JUMPER REMOVABLE	28480	1258-0141
A4P10	1258-0141	8		JUMPER REMOVABLE	28480	1258-0141
A4P11	1258-0141	8		JUMPER REMOVABLE	28480	1258-0141
A4P12	1258-0141	8		JUMPER REMOVABLE	28480	1258-0141
A4R1	0683-1035	1		RESISTOR 10K 5% .25W FC TC=-400/+700	01121	CB1035
A4R2	0683-1035	1		RESISTOR 10K 5% .25W FC TC=-400/+700	01121	CB1035
A4R3	0683-1025	9		RESISTOR 1K 5% .25W FC TC=-400/+600	01121	CB1025
A4R4	0683-1025	9		RESISTOR 1K 5% .25W FC TC=-400/+600	01121	CB1025
A4R5	1810-0232	0	1	NETWORK-RES 8-SIP100.0K OHM X 6	56289	216CH104X9PM
A4R6	0683-1025	9		RESISTOR 1K 5% .25W FC TC=-400/+600	01121	CB1025
A4R7	0683-1035	1		RESISTOR 10K 5% .25W FC TC=-400/+700	01121	CB1035
A4R8	0683-1025	9		RESISTOR 1K 5% .25W FC TC=-400/+600	01121	CB1025
A4R9	0683-3335	8	2	RESISTOR 33K 5% .25W FC TC=-400/+800	01121	CB3335
A4R10	0683-1035	1		RESISTOR 10K 5% .25W FC TC=-400/+700	01121	CB1035
A4R11	0683-5635	5	1	RESISTOR 56K 5% .25W FC TC=-400/+800	01121	CB5635
A4R12	0683-1035	1		RESISTOR 10K 5% .25W FC TC=-400/+700	01121	CB1035
A4R13	0683-4735	4	1	RESISTOR 47K 5% .25W FC TC=-400/+800	01121	CB4735
A4R14	0683-1035	1		RESISTOR 10K 5% .25W FC TC=-400/+700	01121	CB1035
A4R15	0683-1035	1		RESISTOR 10K 5% .25W FC TC=-400/+700	01121	CB1035
A4R16	0683-4745	6	5	RESISTOR 470K 5% .25W FC TC=-800/+900	01121	CB4745
A4R17	0683-4745	6		RESISTOR 470K 5% .25W FC TC=-800/+900	01121	CB4745
A4R18	0683-4745	6		RESISTOR 470K 5% .25W FC TC=-800/+900	01121	CB4745
A4R19	0683-4745	6		RESISTOR 470K 5% .25W FC TC=-800/+900	01121	CB4745
A4R20	0683-1035	1		RESISTOR 10K 5% .25W FC TC=-400/+700	01121	CB1035
A4R21	0683-4745	6		RESISTOR 470K 5% .25W FC TC=-800/+900	01121	CB4745
A4R22	0683-1025	9		RESISTOR 1K 5% .25W FC TC=-400/+600	01121	CB1025
A4R23	0683-3315	4	4	RESISTOR 330 5% .25W FC TC=-400/+600	01121	CB3315
A4TP2	1251-5394	9	1	CONNECTOR 4-PIN M POST TYPE	28480	1251-5394
A4TP3	1251-4682	6		CONNECTOR 3-PIN M POST TYPE	28480	1251-4682
A4U1				NOT USED		
A4U2				NOT USED		
A4U3	1820-1144	6		IC GATE TTL LS NOR QUAD 2-INP	01295	SN74LS02N
A4U4				NOT USED.		
A4U5 Δ9	1818-1629	7		IC MEMORY, ROM	28480	1818-1629
A4U6	1820-1216	3	3	IC DCDR TTL LS 3-TO-8-LINE 3-INP	01295	SN74LS138N
A4U7 Δ9	1818-1630	0		IC MEMORY, ROM	28480	1818-1630
A4U8 Δ9	1818-1631	1		IC MEMORY, ROM	28480	1818-1631
A4U9	1820-1199	1		IC INV TTL LS HEX 1-INP	01295	SN74LS04N
A4U10Δ11	1818-1960	9	2	IC NMOS 8192-BIT RAM STAT 250-NS	28480	1818-1960

See introduction to this section for ordering information
*Indicates factory selected value

Table 6-4. Replaceable Parts (Cont'd).

Reference Designation	HP Part Number	C D	Qty	Description	Mfr Code	Mfr Part Number
A4U11 Δ11	1818-1960	9		IC NMOS 8192-BIT RAM STAT 250-NS	28480	1818-1960
A4U12	1820-1197	9		IC GATE TTL LS NAND QUAD 2-INP	01295	SN74LS00N
A4U13	1820-1112	8		IC FF TTL LS D-TYPE POS-EDGE-TRIG	01295	SN74LS74AN
A4U14	1820-2036	7	1	IC DRVR NMOS CLOCK DRVR	04713	MC6875L
A4U15	1820-2137	9	1	IC MICPROC NMOS 8-BIT	04713	MC68A00P
A4U16 Δ1	1820-1416	5		IC SCHMITT-TRIG TTL LS INV HEX 1-INP	01295	SN74LS14N
A4U17	1820-1216	3		IC DCDR TTL LS 3-TO-8-LINE 3-INP	01295	SN74LS138N
A4U18 Δ1	1820-0693	8	1	IC FF TTL S D-TYPE POS-EDGE-TRIG	01698	SN74S74N
A4U19	1820-1216	3		IC DCDR TTL LS 3-TO-8-LINE 3-INP	01295	SN74LS138N
A4U20	1820-1423	4	1	IC MV TTL LS MONOSTBL RETRIG DUAL	01295	SN74LS123N
A4U21	1820-2309	7	1	IC ENCDR CMOS	27014	MM74C923N
A4U22	1820-1112	8		IC FF TTL LS D-TYPE POS-EDGE-TRIG	01295	SN74LS74AN
A4U23	1820-1197	9		IC GATE TTL LS NAND QUAD 2-INP	01295	SN74LS00N
A4U24	1820-1112	8		IC FF TTL LS D-TYPE POS-EDGE-TRIG	01295	SN74LS74AN
A4U25	1820-1759	9		IC BFR TTL LS NON-INV OCTL	27014	DM81LS97N
A4U26	1820-1931	9	1	IC GATE CMOS NAND 8-INP	04713	MC14068BCP
A4U27	1820-1144	6		IC GATE TTL LS NOR QUAD 2-INP	01295	SN74LS02N
A4U28	1820-1858	9	1	IC FF TTL LS D-TYPE OCTL	01295	SN74LS377N
A4U29	1820-2132	4	2	IC DRVR CMOS LED DRVR	32293	ICM7218A
A4U30	1820-2132	4		IC DRVR CMOS LED DRVR	32293	ICM7218A
A4XE5	1200-0473	8	1	SOCKET-IC 16-CONT DIP DIP-SLDR	28480	1200-0473
A4X15	1200-0659	2		SOCKET-IC 40-CONT DIP-SLDR	28480	1200-0659
A4Y1	0410-1292	5	1	CRYSTAL-6.00 MHZ	28480	0410-1292
A10	03456-66510	7	1	PC ASSEMBLY-INGUARD POWER SUPPLY	28480	03456-66510
A10C1	0160-4571	8		CAPACITOR-FXD .1UF +80-20% 50VDC CER	28480	0160-4571
A10C2	0160-4571	8		CAPACITOR-FXD .1UF +80-20% 50VDC CER	28480	0160-4571
A10C3	0160-4571	8		CAPACITOR-FXD .1UF +80-20% 50VDC CER	28480	0160-4571
A10C4	0160-4571	8		CAPACITOR-FXD .1UF +80-20% 50VDC CER	28480	0160-4571
A10C5	0180-3025	7	1	CAPACITOR-FXD 4000UF+100-10% 15VDC AL	28480	0180-3025
A10C6	0180-0230	0	16	CAPACITOR-FXD 1UF+-20% 50VDC TA	56289	150D105X0050A2
A10C7	0180-3009	7	1	CAPACITOR-FXD 47UF+-20% 50VDC AL	28480	0180-3009
A10C8	0180-2803	7	1	CAPACITOR-FXD 100UF+50-10% 50VDC AL	28480	0180-2803
A10C9	0180-0230	0		CAPACITOR-FXD 1UF+-20% 50VDC TA	56289	150D105X0050A2
A10C10	0180-0230	0		CAPACITOR-FXD 1UF+-20% 50VDC TA	56289	150D105X0050A2
A10C11	0180-0230	0		CAPACITOR-FXD 1UF+-20% 50VDC TA	56289	150D105X0050A2
A10C12	0180-0230	0		CAPACITOR-FXD 1UF+-20% 50VDC TA	56289	150D105X0050A2
A10C13	0180-2635	3	2	CAPACITOR-FXD 1000UF+50-10% 35VDC AL	28480	0180-2635
A10C14	0180-0230	0		CAPACITOR-FXD 1UF+-20% 50VDC TA	56289	150D105X0050A2
A10C15	0180-2635	3		CAPACITOR-FXD 1000UF+50-10% 35VDC AL	28480	0180-2635
A10C16	0180-3014	4	1	CAPACITOR-FXD 330UF+-20% 50VDC AL	28480	0180-3014
A10C17	0180-0230	0		CAPACITOR-FXD 1UF+-20% 50VDC TA	56289	150D105X0050A2
A10C18	0180-0230	0		CAPACITOR-FXD 1UF+-20% 50VDC TA	56289	150D105X0050A2
A10C19	0180-3008	6	1	CAPACITOR-FXD 470UF+50-10% 35VDC AL	28480	0180-3008
A10CR1	1906-0096	7	2	DIODE-FW BRDG 200V 2A	04713	MDA202
A10CR2	1906-0096	7		DIODE-FW BRDG 200V 2A	04713	MDA202
A10CR3	1902-0644	3	2	DIODE-ZNR 1N5363B 30V 5% PD=5W TC=+29MV	28480	1902-0644
A10CR4	1902-0644	3		DIODE-ZNR 1N5363B 30V 5% PD=5W TC=+29MV	28480	1902-0644
A10CR5	1902-1000	7	1	DIODE-ZNR 1N5366B 39V 5% PD=5W IR=500NA	04713	1N5366B
A10CR6	1901-0028	5	4	DIODE-PWR RECT 400V 750MA DO-29	28480	1901-0028
A10CR7	1902-1340	8	2	DIODE-ZNR 1N5355B 18V 5% PD=5W IR=500NA	04713	1N5355B
A10CR8	1901-0028	5		DIODE-PWR RECT 400V 750MA DO-29	28480	1901-0028
A10CR9	1901-0028	5		DIODE-PWR RECT 400V 750MA DO-29	28480	1901-0028
A10CR10	1901-0028	5		DIODE-PWR RECT 400V 750MA DO-29	28480	1901-0028
A10CR11	1902-1340	8		DIODE-ZNR 1N5355B 18V 5% PD=5W IR=500NA	04713	1N5355B
A10CR12	1902-1288	3	1	DIODE-ZNR 1N5358B 22V 5% PD=5W TC=+75%	04713	1N5358B
A10H1 Δ10	1205-0462	5	4	HEAT SINK SGL TO-220-CS	28480	1205-0462
A10H2 Δ10	1205-0462	5		HEAT SINK SGL TO-220-CS	28480	1205-0462
A10H3 Δ10	1205-0462	5		HEAT SINK SGL TO-220-CS	28480	1205-0462
A10H4 Δ10	1205-0462	5		HEAT SINK SGL TO-220-CS	28480	1205-0462
A10J14	1251-5386	9	1	CONNECTOR 6-PIN M POST TYPE	28480	1251-5386
A10P14	1251-5391	6	1	CONNECTOR 6-PIN F POST TYPE	28480	1251-5391
	1251-6066	4	6	CONTACT-CONN U/W-POST-TYPE FEM CRP	28480	1251-6066
A10P15	1251-6014	2	1	CONNECTOR 8-PIN F POST TYPE	28480	1251-6014
A10R1	0757-0737	5	1	RESISTOR 1.62K 1% .25W F TC=0+-100	24546	C5-1/4-T0-1621-F
A10R2	0757-0403	2	1	RESISTOR 121 1% .125W F TC=0+-100	24546	C4-1/8-T0-121R-F
A10U1	1826-0122	0	1	IC 7805 V RGLTR TO-220	07263	7805UC
A10U2	1826-0396	0	1	IC 7815 V RGLTR TO-220	07263	7815UC
A10U3	1826-0214	1	1	IC V RGLTR TO-220	04713	MC7915CT
A10U4	1826-0527	9	1	IC 337 V RGLTR TO-220	27014	LM337T

ΔA SEE NOTE ON SCHEMATIC 9

See introduction to this section for ordering information
*Indicates factory selected value

Table 6-4. Replaceable Parts (Cont'd).

Reference Designation	HP Part Number	C D	Qty	Description	Mfr Code	Mfr Part Number
A20	03456-66520	9	1	PC ASSEMBLY-DC, A/D AND OHMS	28480	03456-66520
A20C101	0160-5231	5	4	CAPACITOR-FXD 470PF +-10% 100VDC POLYP	28480	0160-5231
A20C102	0160-5231	5		CAPACITOR-FXD 470PF +-10% 100VDC POLYP	28480	0160-5231
A20C103	0160-5231	5		CAPACITOR-FXD 470PF +-10% 100VDC POLYP	28480	0160-5231
A20C104	0160-5251	5	1	CAPACITOR-FXD 470PF +-10% 100VDC	28480	0160-5251
A20C105	0160-4078	0	2	CAPACITOR-FXD 1UF +-10% 100VDC POLYP	28480	0160-4078
A20C106	0160-0859	7	1	CAPACITOR-FXD 1UF +-10% 50VDC POLYE	28480	0160-0859
A20C107	0160-0970	3	1	CAPACITOR-FXD .47UF +-10% 80VDC POLYE	28480	0160-0970
A20C108	0160-0181	8	1	CAPACITOR-FXD 30PF +-5% 300VDC MICA	28480	0160-0181
A20C109	0180-0230	0		CAPACITOR-FXD 1UF+-20% 50VDC TA	56289	150D105X0050A2
A20C110	0180-0230	0		CAPACITOR-FXD 1UF+-20% 50VDC TA	56289	150D105X0050A2
A20C111 Δ6	0160-3336	1	2	CAPACITOR-FXD 100PF +-5% 100VDC CER	28480	0160-3336
A20C201	0160-3336	1	4	CAPACITOR-FXD 100PF +-10% 50VDC CER	28480	0160-3336
A20C202	0160-4461	5	1	CAPACITOR-FXD 150PF +-2.5% 160VDC POLYP	28480	0160-4461
A20C203	0160-3336	1		CAPACITOR-FXD 100PF +-10% 50VDC CER	28480	0160-3336
A20C204	0160-3336	1		CAPACITOR-FXD 100PF +-10% 50VDC CER	28480	0160-3336
A20C301	0160-4807	3	2	CAPACITOR-FXD 33PF +-5% 100VDC CER 0+-30	28480	0160-4807
A20C302	0160-4807	3		CAPACITOR-FXD 33PF +-5% 100VDC CER 0+-30	28480	0160-4807
A20C303	0160-0362	6	1	CAPACITOR-FXD 510PF +-5% 300VDC MICA	28480	0160-0362
A20C304	0160-4814	2		CAPACITOR-FXD 150PF +-5% 100VDC CER	28480	0160-4814
A20C305	0160-0158	8	1	CAPACITOR-FXD 5600PF +-5% 200VDC POLYE	28480	0160-0158
A20C401	0160-4571	8		CAPACITOR-FXD .1UF +80-20% 50VDC CER	28480	0160-4571
A20C402	0160-5231	5		CAPACITOR-FXD 470PF +-10% 100 VDC POLYP	28480	0160-5231
A20C403	0160-5104	5	1	CAPACITOR-FXD .0039MF .05 POLYP	28480	0160-5104
A20C404	0180-0197	8	1	CAPACITOR-FXD 2.2UF+-10% 20VDC TA	56289	150D225X9020A2
A20C405	0160-4808	4	1	CAPACITOR-FXD 470PF +-5% 100VDC CER	28480	0160-4808
A20C406	0180-0230	0		CAPACITOR-FXD 1UF+-20% 50VDC TA	56289	150D105X0050A2
A20C407	0180-0230	0		CAPACITOR-FXD 1UF+-20% 50VDC TA	56289	150D105X0050A2
A20C408	0180-0230	0		CAPACITOR-FXD 1UF+-20% 50VDC TA	56289	150D105X0050A2
A20C409	0180-0230	0		CAPACITOR-FXD 1UF+-20% 50VDC TA	56289	150D105X0050A2
A20C410	0160-4831	3	1	CAPACITOR-FXD 4700PF +-10% 100VDC CER	28480	0160-4831
A20C411	0160-4078	0		CAPACITOR-FXD 1UF +-10% 100VDC POLYP	28480	0160-4078
A20C505	0180-0230	0		CAPACITOR-FXD 1UF+-20% 50VDC TA	56289	150D105X0050A2
A20C506	0160-4571	8		CAPACITOR-FXD .1UF +80-20% 50VDC CER	28480	0160-4571
A20C700	0180-0116	1	1	CAPACITOR-FXD 6.8UF+-10% 35VDC TA	56289	150D685X9035B2
A20C701 Δ6	0180-0269	5		CAPACITOR-FXD 1UF+-20% 150VDC TA	56289	150D105X0150A2
A20CR101	1902-1337	3	2	DIODE-ZNR 13V 2% DO-7 PD=.4W	28480	1902-1337
A20CR102	1902-1337	3		DIODE-ZNR 13V 2% DO-7 PD=.4W	28480	1902-1337
A20CR201	1901-0586	0	1	DIODE-GEN PRP 30V 25MA TO-72	28480	1901-0586
A20CR202	1901-0029	6	1	DIODE-PWR RECT 600V 750MA DO-29	28480	1901-0029
A20CR301	1901-0050	3		DIODE-SWITCHING 80V 200MA 2NS DO-35	28480	1901-0050
A20CR302	1901-0050	3		DIODE-SWITCHING 80V 200MA 2NS DO-35	28480	1901-0050
A20CR303	1901-0050	3		DIODE-SWITCHING 80V 200MA 2NS DO-35	28480	1901-0050
A20CR304	1901-0050	3		DIODE-SWITCHING 80V 200MA 2NS DO-35	28480	1901-0050
A20CR305	1901-0050	3		DIODE-SWITCHING 80V 200MA 2NS DO-35	28480	1901-0050
A20CR306	1901-0050	3		DIODE-SWITCHING 80V 200MA 2NS DO-35	28480	1901-0050
A20CR307	1901-0518	8	3	DIODE-SCHOTTKY	28480	1901-0518
A20CR308	1901-0518	8		DIODE-SCHOTTKY	28480	1901-0518
A20CR401	1901-0050	3		DIODE-SWITCHING 80V 200MA 2NS DO-35	28480	1901-0050
A20CR402	1901-0376	6	5	DIODE-GEN PRP 35V 50MA DO-35	28480	1901-0376
A20CR403	1901-0376	6		DIODE-GEN PRP 35V 50MA DO-35	28480	1901-0376
A20CR404	1901-0518	8		DIODE-SCHOTTKY	28480	1901-0518
A20CR502	1901-0704	4	1	DIODE-PWR RECT 1N4002 100V 1A DO-41	01295	1N4002
A20CR503	1902-3149	9	1	DIODE-ZNR 9.09V 5% DO-35 PD=.4W	28480	1902-3149
A20CR701	1901-0040	1	13	DIODE-SWITCHING 30V 50MA 2NS DO-35	28480	1901-0040
A20CR702	1901-0040	1		DIODE-SWITCHING 30V 50MA 2NS DO-35	28480	1901-0040
A20CR703	1901-0040	1		DIODE-SWITCHING 30V 50MA 2NS DO-35	28480	1901-0040
A20CR704	1902-3182	0	1	DIODE-ZNR 12.1V 5% DO-35 PD=.4W	28480	1902-3182
A20E201	1970-0084	8	1	TUBE-ELECTRON SURGE V PTCTR	28480	1970-0084
A20F201	2110-0011	0	1	FUSE .062A 250V NTD 1.25X.25 UL	28480	2110-0011
A20J16	1251-4644	0	1	CONNECTOR 7-PIN F POST TYPE	28480	1251-4644
A20J24	1251-6064	2	1	CONNECTOR 5-PIN M POST TYPE	28480	1251-6064
A20J25	1251-6191	6	1	CONNECTOR 4-PIN M POST TYPE	28480	1251-6191
A20J26	1200-0867	4	3	SOCKET-STRP 8-CONT SIP DIP-SLDR	28480	1200-0867
A20J27	1200-0867	4		SOCKET-STRP 8-CONT SIP DIP-SLDR	28480	1200-0867
A20J28	1200-0867	4		SOCKET-STRP 8-CONT SIP DIP-SLDR	28480	1200-0867
A20J29	1251-6515	8	1	CONNECTOR 6-PIN M POST TYPE	28480	1251-6515
A20K101	0490-0683	4	4	RELAY-REED 1A 500MA 1000VDC 5VDC-COIL	28480	0490-0683
A20K102	0490-0683	4		RELAY-REED 1A 500MA 1000VDC 5VDC-COIL	28480	0490-0683
A20K103	0490-1238	7	1	RELAY-REED 2A 1200VDC 15VDC-COIL 15VA	28480	0490-1238
A20P15	1251-3962	3	1	CONNECTOR 8-PIN F POST TYPE	28480	1251-3962
A20P17	1251-6062	0	8	CONNECTOR 10-PIN F POST TYPE	28480	1251-6062
A20P18	1251-6062	0		CONNECTOR 10-PIN F POST TYPE	28480	1251-6062
A20P21	1251-6062	0		CONNECTOR 10-PIN F POST TYPE	28480	1251-6062
A20P29	1258-0141	8		JUMPER REMOVABLE	28480	1258-0141

See introduction to this section for ordering information
*Indicates factory selected value

Table 6-4. Replaceable Parts (Cont'd).

Reference Designation	HP Part Number	C D	Qty	Description	Mfr Code	Mfr Part Number
A20P30	1251-6062	0		CONNECTOR 10-PIN F POST TYPE	28480	1251-6062
A20Q101	1855-0429	1	6	TRANSISTOR J-FET N-CHAN D-MODE TO-92	28480	1855-0429
A20Q102	1855-0298	2	23	TRANSISTOR J-FET N-CHAN D-MODE TO-92	28480	1855-0298
A20Q103	1855-0298	2		TRANSISTOR J-FET N-CHAN D-MODE TO-92	28480	1855-0298
A20Q104	1855-0298	2		TRANSISTOR J-FET N-CHAN D-MODE TO-92	28480	1855-0298
A20Q105	1855-0298	2		TRANSISTOR J-FET N-CHAN D-MODE TO-92	28480	1855-0298
A20Q106	1855-0298	2		TRANSISTOR J-FET N-CHAN D-MODE TO-92	28480	1855-0298
A20Q107	1855-0298	2		TRANSISTOR J-FET N-CHAN D-MODE TO-92	28480	1855-0298
A20Q108	1855-0298	2		TRANSISTOR J-FET N-CHAN D-MODE TO-92	28480	1855-0298
A20Q109	1855-0298	2		TRANSISTOR J-FET N-CHAN D-MODE TO-92	28480	1855-0298
A20Q110	1855-0298	2		TRANSISTOR J-FET N-CHAN D-MODE TO-92	28480	1855-0298
A20Q111	1855-0298	2		TRANSISTOR J-FET N-CHAN D-MODE TO-92	28480	1855-0298
A20Q112	1855-0298	2		TRANSISTOR J-FET N-CHAN D-MODE TO-92	28480	1855-0298
A20Q113	1855-0429	1		TRANSISTOR J-FET N-CHAN D-MODE TO-92	28480	1855-0429
A20Q114	1855-0429	1		TRANSISTOR J-FET N-CHAN D-MODE TO-92	28480	1855-0429
A20Q115	1855-0298	2		TRANSISTOR J-FET N-CHAN D-MODE TO-92	28480	1855-0298
A20Q116	1855-0298	2		TRANSISTOR J-FET N-CHAN D-MODE TO-92	28480	1855-0298
A20Q117	1855-0298	2		TRANSISTOR J-FET N-CHAN D-MODE TO-92	28480	1855-0298
A20Q118	1855-0298	2		TRANSISTOR J-FET N-CHAN D-MODE TO-92	28480	1855-0298
A20Q119	1855-0298	2		TRANSISTOR J-FET N-CHAN D-MODE TO-92	28480	1855-0298
A20Q120	1855-0243	7	2	TRANSISTOR-JFET DUAL N-CHAN TO-71 SI	28480	1855-0243
A20Q121	1855-0270	0	4	TRANSISTOR J-FET N-CHAN D-MODE TO-92 SI	28480	1855-0270
A20Q201	1855-0298	2		TRANSISTOR J-FET N-CHAN D-MODE TO-92	28480	1855-0298
A20Q202	1855-0298	2		TRANSISTOR J-FET N-CHAN D-MODE TO-92	28480	1855-0298
A20Q203	1855-0298	2		TRANSISTOR J-FET N-CHAN D-MODE TO-92	28480	1855-0298
A20Q204	1855-0298	2		TRANSISTOR J-FET N-CHAN D-MODE TO-92	28480	1855-0298
A20Q205	1855-0298	2		TRANSISTOR J-FET N-CHAN D-MODE TO-92	28480	1855-0298
A20Q206	1855-0298	2		TRANSISTOR J-FET N-CHAN D-MODE TO-92	28480	1855-0298
A20Q207	1855-0298	2		TRANSISTOR J-FET N-CHAN D-MODE TO-92	28480	1855-0298
A20Q208	1855-0429	1		TRANSISTOR J-FET N-CHAN D-MODE TO-92	28480	1855-0429
A20Q209	1855-0429	1		TRANSISTOR J-FET N-CHAN D-MODE TO-92	28480	1855-0429
A20Q210	1854-0079	5	2	TRANSISTOR NPN 2N3439 SI TO-5 PD=1W	01928	2N3439
A20Q211	1854-0079	5		TRANSISTOR NPN 2N3439 SI TO-5 PD=1W	01928	2N3439
A20Q301	1854-0215	1	1	TRANSISTOR NPN SI PD=350MW FT=300MHZ	04713	2N3904
A20Q302	1855-0386	9	4	TRANSISTOR J-FET 2N4392 N-CHAN D-MODE	04713	2N4392
A20Q303	1855-0386	9		TRANSISTOR J-FET 2N4392 N-CHAN D-MODE	04713	2N4392
A20Q304	1855-0386	9		TRANSISTOR J-FET 2N4392 N-CHAN D-MODE	04713	2N4392
A20Q305	1855-0247	1	2	TRANSISTOR-JFET DUAL N-CHAN D-MODE TO-71	28480	1855-0247
A20Q306	1855-0386	9		TRANSISTOR J-FET 2N4392 N-CHAN D-MODE	04713	2N4392
A20Q307	1855-0270	0		TRANSISTOR J-FET N-CHAN D-MODE TO-92 SI	28480	1855-0270
A20Q308	1855-0341	6	1	TRANSISTOR J-FET 2N4338 N-CHAN D-MODE	17856	2N4338
A20Q309	1855-0270	0		TRANSISTOR J-FET N-CHAN D-MODE TO-92 SI	28480	1855-0270
A20Q310	1855-0246	0	2	TRANSISTOR-JFET DUAL N-CHAN D-MODE TO-71	28480	1855-0246
A20Q311	1855-0247	1		TRANSISTOR-JFET DUAL N-CHAN D-MODE TO-71	28480	1855-0247
A20Q401	1853-0066	8	1	TRANSISTOR PNP SI TO-92 PD=625MW	28480	1853-0066
A20Q402	1855-0420	2	5	TRANSISTOR J-FET 2N4391 N-CHAN D-MODE	01295	2N4391
A20Q403	1855-0420	2		TRANSISTOR J-FET 2N4391 N-CHAN D-MODE	01295	2N4391
A20Q404	1855-0414	4	1	TRANSISTOR J-FET 2N4393 N-CHAN D-MODE	04713	2N4393
A20Q405	1855-0270	0		TRANSISTOR J-FET N-CHAN D-MODE TO-92 SI	28480	1855-0270
A20Q406 Δ4	1855-0460	0		TRANSISTOR-JFET DUAL N-CHAN D-MODE TO-71	28480	1855-0460
A20Q407	1855-0243	7		TRANSISTOR-JFET DUAL N-CHAN TO-71 SI	28480	1855-0243
A20Q408	1855-0429	1		TRANSISTOR J-FET N-CHAN D-MODE TO-92	28480	1855-0429
A20Q501	1853-0089	5	1	TRANSISTOR PNP 2N4917 SI PD=200MW	07263	2N4917
A20Q701	1854-0087	5	5	TRANSISTOR NPN SI PD=360MW FT=75MHZ	28480	1854-0087
A20Q702	1854-0087	5		TRANSISTOR NPN SI PD=360MW FT=75MHZ	28480	1854-0087
A20Q703	1854-0087	5		TRANSISTOR NPN SI PD=360MW FT=75MHZ	28480	1854-0087
A20R101	0698-3179	9	1	RESISTOR 2.55K 1% .125W F TC=0+-100	24546	C4-1/8-T0-2551
A20R102	0692-2735	9	4	RESISTOR 27K 5% 2W CC TC=0+765	01121	HB2735
A20R103	0686-1035	7	1	RESISTOR 10K 5% .5W CC TC=0+765	01121	EB1035
A20R104	0689-1045	5	1	RESISTOR 100K 5% 1W CC TC=0+882	01121	GB1045
A20R105	0693-1041	0	2	RESISTOR 100K 10% 2W CC TC=0+882	01121	HB1041
A20R106	0693-1041	0		RESISTOR 100K 10% 2W CC TC=0+882	01121	HB1041
A20R107	0698-3558	8	3	RESISTOR 4.02K 1% .125W F TC=0+-100	24546	C4-1/8-T0-4021-F
A20R108	0698-3558	8		RESISTOR 4.02K 1% .125W F TC=0+-100	24546	C4-1/8-T0-4021-F
A20R109	0692-2735	9		RESISTOR 27K 5% 2W CC TC=0+765	01121	HB2735
A20R110	0692-2735	9		RESISTOR 27K 5% 2W CC TC=0+765	01121	HB2735
A20R111	0683-1045	3	17	RESISTOR 100K 5% .25W FC TC=-400/+800	01121	CB1045
A20R112	0683-1035	1		RESISTOR 10K 5% .25W FC TC=-400/+700	01121	CB1035
A20R113	0683-1035	1		RESISTOR 10K 5% .25W FC TC=-400/+700	01121	CB1035
A20R114	0683-1035	1		RESISTOR 10K 5% .25W FC TC=-400/+700	01121	CB1035
A20R115	0683-1035	1		RESISTOR 10K 5% .25W FC TC=-400/+700	01121	CB1035
A20R116	0683-1035	1		RESISTOR 10K 5% .25W FC TC=-400/+700	01121	CB1035
A20R117	0683-1035	1		RESISTOR 10K 5% .25W FC TC=-400/+700	01121	CB1035
A20R118	0683-1035	1		RESISTOR 10K 5% .25W FC TC=-400/+700	01121	CB1035
A20R119	0683-1035	1		RESISTOR 10K 5% .25W FC TC=-400/+700	01121	CB1035
A20R120	0692-2735	9		RESISTOR 27K 5% 2W CC TC=0+765	01121	HB2735

See introduction to this section for ordering information
*Indicates factory selected value

Table 6-4. Replaceable Parts (Cont'd).

Reference Designation	HP Part Number	C D	Qty	Description	Mfr Code	Mfr Part Number
A20R121	0683-1035	1		RESISTOR 10K 5% .25W FC TC=-400/+700	01121	CB1035
A20R122	0683-1035	1		RESISTOR 10K 5% .25W FC TC=-400/+700	01121	CB1035
A20R123	0683-1035	1		RESISTOR 10K 5% .25W FC TC=-400/+700	01121	CB1035
A20R124	0683-1035	1		RESISTOR 10K 5% .25W FC TC=-400/+700	01121	CB1035
A20R125	0683-1035	1		RESISTOR 10K 5% .25W FC TC=-400/+700	01121	CB1035
A20R126	0757-0442	9	15	RESISTOR 10K 1% .125W F TC=0+-100	24546	C4-1/8-T0-1002-F
A20R127	0757-0442	9		RESISTOR 10K 1% .125W F TC=0+-100	24546	C4-1/8-T0-1002-F
A20R128	0683-1045	3		RESISTOR 100K 5% .25W FC TC=-400/+800	01121	CB1045
A20R129	0683-1045	3		RESISTOR 100K 5% .25W FC TC=-400/+800	01121	CB1045
A20R130	0683-1045	3		RESISTOR 100K 5% .25W FC TC=-400/+800	01121	CB1045
A20R131	0683-1005	5	6	RESISTOR 10 5% .25W FC TC=-400/+500	01121	CB1005
A20R132	0683-1005	5		RESISTOR 10 5% .25W FC TC=-400/+500	01121	CB1005
A20R133	0683-1045	3		RESISTOR 100K 5% .25W FC TC=-400/+800	01121	CB1045
A20R134	0683-1035	1		RESISTOR 10K 5% .25W FC TC=-400/+700	01121	CB1035
A20R135	0698-3572	6		RESISTOR 60.4K 1% .125W F TC=0+-100	24546	C4-1/8-T0-6042-F
A20R136	0698-4482	9	1	RESISTOR 17.4K 1% .125W F TC=0+-100	03888	PME55-1/8-T0-1742-F
A20R137	0683-1045	3		RESISTOR 100K 5% .25W FC TC=-400/+800	01121	CB1045
A20R138	0683-1045	3		RESISTOR 100K 5% .25W FC TC=-400/+800	01121	CB1045
A20R139	0683-1045	3		RESISTOR 100K 5% .25W FC TC=-400/+800	01121	CB1045
A20R140	0683-1045	3		RESISTOR 100K 5% .25W FC TC=-400/+800	01121	CB1045
A20R141 THRU R145	0683-1045	3		RESISTOR 100K 5% .25W FC TC=-400/+800	01121	CB1045
A20R146	0683-5135	0	9	RESISTOR 51K 5% .25W FC TC+-400/+800	01121	CB5135
A20R147, R148	2100-3253	7	2	RESISTOR-TRMR 50K 10% C TOP-ADJ 1-TRN	28480	2100-3253
A20R149	0698-3547	5	1	RESISTOR 1 OHM 5% .5W	01607	EB10G5
A20R150*	0699-0740	6	1	RESISTOR 12M 5% .125W	01121	BB12M
A20R150*	0698-6592	6	1	RESISTOR 6.8M 5% .125W	28480	0698-6592
A20R150*	0699-0741	7	1	RESISTOR 8.2M 5% .125W	01121	BB8.2M
A20R201	0698-3262	1	1	RESISTOR 40.2 1% .125W F TC=0+-100	24546	C4-1/8-T0-4022-F
A20R202	0698-3450	9		RESISTOR 42.2K 1% .125W F TC=0+-100	24546	C4-1/8-T0-4222-F
A20R203	0698-8690	9	1	RESISTOR 4.75 1% .125W F TC=0+-100	28480	0698-8690
A20R204	0757-0346	2	1	RESISTOR 10 1% .125W F TC=0+-100	24546	C4-1/8-T0-10R0-F
A20R205	0698-4366	8	1	RESISTOR 19.1 1% .125W F TC=0+-100	03888	PME55-1/8-T0-19R1-F
A20R206	0698-4377	1	1	RESISTOR 37.4 1% .125W F TC=0+-100	24546	C4-1/8-T0-37R4-F
A20R207	0757-0486	1	1	RESISTOR 750K 1% .125W F TC=0+-100	28480	0757-0486
A20R208	0683-3025	3	1	RESISTOR 3K 5% .25W FC TC=-400/+700	01121	CB3025
A20R209	0683-2025	1	1	RESISTOR 2K 5% .25W FC TC=-400/+700	01121	CB2025
A20R210	0683-5135	0		RESISTOR 51K 5% .25W FC TC=-400/+800	01121	CB5135
A20R211	0683-5135	0		RESISTOR 51K 5% .25W FC TC=-400/+800	01121	CB5135
A20R212	0683-5135	0		RESISTOR 51K 5% .25W FC TC=-400/+800	01121	CB5135
A20R213	0683-1335	4	1	RESISTOR 13K 5% .25W FC TC=-400/+800	01121	CB1335
A20R214	0811-1053	6	1	RESISTOR 30K .02% .25W PWW TC=0+-1	28480	0811-1053
A20R215	0683-1045	3		RESISTOR 100K 5% .25W FC TC=-400/+800	01121	CB1045
A20R216	0683-1045	3		RESISTOR 100K 5% .25W FC TC=-400/+800	01121	CB1045
A20R217	0683-1045	3		RESISTOR 100K 5% .25W FC TC=-400/+800	01121	CB1045
A20R218	0699-0072	7	1	RESISTOR 6.81M 1% .125W F TC=0+-100	28480	0699-0072
A20R219	0764-0028	2	1	RESISTOR 100K 5% 2W MO TC=0+-200	28480	0764-0028
A20R220	0698-4490	9		RESISTOR 29.4K 1% .125W F TC=0+-100	24546	C4-1/8-T0-2942-F
A20R221	0757-0450	9	1	RESISTOR 22.1K 1% .125W F TC=0+-100	24546	C4-1/8-T0-2212-F
A20R222	0683-1015	7	1	RESISTOR 100 5% .25W FC TC=-400/+500	01121	CB1015
A20R301	0757-0442	9		RESISTOR 10K 1% .125W F TC=0+-100	24546	C4-1/8-T0-1002-F
A20R302	0757-0283	6	2	RESISTOR 2K 1% .125W F TC=0+-100	24546	C4-1/8-T0-2001-F
A20R303	0757-0273	4	2	RESISTOR 3.01K 1% .125W F TC=0+-100	24546	C4-1/8-T0-3011-F
A20R304	0757-0449	6		RESISTOR 20K 1% .125W F TC=0+-100	24546	C4-1/8-T0-2002-F
A20R305	0757-0446	3	5	RESISTOR 15K 1% .125W F TC=0+-100	24546	C4-1/8-T0-1502-F
A20R306	0757-0455	4	1	RESISTOR 36.5K 1% .125W F TC=0+-100	24546	C4-1/8-T0-3652-F
A20R307	0757-0449	6		RESISTOR 20K 1% .125W F TC=0+-100	24546	C4-1/8-T0-2002-F
A20R308	0757-0446	3		RESISTOR 15K 1% .125W F TC=0+-100	24546	C4-1/8-T0-1502-F
A20R309	0757-0465	6	22	RESISTOR 100K 1% .125W F TC=0+-100	24546	C4-1/8-T0-1003-F
A20R310	0757-0469	0	1	RESISTOR 150K 1% .125W F TC=0+-100	24546	C4-1/8-T0-1503-F
A20R311	0757-0274	5	1	RESISTOR 1.21K 1% .125W F TC=0+-100	24546	C4-1/8-T0-1213-F
A20R312	0698-3496	0		RESISTOR 3.57K 1% .125W F TC=0+-100	24546	C4-1/8-T0-3571-F
A20R313	0698-4121	3	1	RESISTOR 11.3K1% .125W F TC=0+-100	24546	C4-1/8-T0-1132-F
A20R314	0757-0465	6		RESISTOR 100K 1% .125W F TC=0+-100	24546	C4-1/8-T0-1003-F
A20R315	0757-0465	6		RESISTOR 100K 1% .125W F TC=0+-100	24546	C4-1/8-T0-1003-F
A20R316	0757-0465	6		RESISTOR 100K 1% .125W F TC=0+-100	24546	C4-1/8-T0-1003-F
A20R317	0757-0465	6		RESISTOR 100K 1% .125W F TC=0+-100	24546	C4-1/8-T0-1003-F
A20R318	0757-0280	3	6	RESISTOR 1K 1% .125W F TC=0+-100	24546	C4-1/8-T0-1001-F
A20R319	0757-0280	3		RESISTOR 1K 1% .125W F TC=0+-100	24546	C4-1/8-T0-1001-F
A20R320	0757-0442	9		RESISTOR 10K 1% .125W F TC=0+-100	24546	C4-1/8-T0-1002-F
A20R321	0757-0442	9		RESISTOR 10K 1% .125W F TC=0+-100	24546	C4-1/8-T0-1002-F
A20R322	0757-0444	1	1	RESISTOR 12.1K 1% .125W F TC=0+-100	24546	C4-1/8-T0-1212-F
A20R323	0757-0451	0		RESISTOR 24.3K 1% .125W F TC=0+-100	24546	C4-1/8-T0-2432-F
A20R324	0757-0317	7	1	RESISTOR 1.33K 1% .125W F TC=0+-100	24546	C4-1/8-T0-1331-F
A20R325	0698-3156	2	1	RESISTOR 14.7K 1% .125W F TC=0+-100	24546	C4-1/8-T0-1472-F

See introduction to this section for ordering information
*Indicates factory selected value

Table 6-4. Replaceable Parts (Cont'd).

Reference Designation	HP Part Number	C D	Qty	Description	Mfr Code	Mfr Part Number
A20R326	0698-3451	0	2	RESISTOR 133K 1% .125W F TC=0+-100	24546	C4-1/8-T0-1333-F
A20R327	0698-3451	0		RESISTOR 133K 1% .125W F TC=0+-100	24546	C4-1/8-T0-1333-F
A20R328	0698-8824	1	2	RESISTOR 562K 1% .125W F TC=0+-100	28480	0698-8824
A20R329	0757-0449	6		RESISTOR 20K 1% .125W F TC=0+-100	24546	C4-1/8-T0-2002-F
A20R330	0757-0449	6		RESISTOR 20K 1% .125W F TC=0+-100	24546	C4-1/8-T0-2002-F
A20R331	0698-8824	1		RESISTOR 562K 1% .125W F TC=0+-100	28480	0698-8824
A20R332	0757-0442	9		RESISTOR 10K 1% .125W F TC=0+-100	24546	C4-1/8-T0-1002-F
A20R333	0698-3151	1	1	RESISTOR 2.87K 1% .125W F TC=+-100	24546	C4-1/8-T0-2871-F
A20R334	2100-3383	4	1	RESISTOR-TRMR 50 10% C TOP-ADJ 1-TRN	28480	2100-3383
A20R401	0757-0280	3		RESISTOR 1K 1% .125W F TC=0+-100	24546	C4-1/8-T0-1001-F
A20R402	0698-4307	7	1	RESISTOR 14.3K 1% .125W F TC=0+-100	24546	C4-1/8-T0-1432-F
A20R403*	0698-4539	7	4	RESISTOR 402K 1% .125W F TC=0+-100	28480	0698-4539
A20R403*	0757-0465	5		RESISTOR 100K 1% .125W F TC=0+-100	24546	C4-1/8-T0-1003-F
A20R403*	0757-0472	5	2	RESISTOR 200K 1% .125W F TC=0+-100	24546	C4-1/8-T0-2003-F
A20R403*	0757-0476	9	2	RESISTOR 301K 1% .125W F TC=0+-100	24546	C4-1/8-T0-3013-F
				(PADDING LIST FOR R403 - 3 EACH)		
A20R404	0698-4453	4	1	RESISTOR 402 1% .125W F TC=0+-100	24546	C4-1/8-T0-402R-F
A20R405	0698-4515	9	1	RESISTOR 107K 1% .125W F TC=0+-100	24546	C4-1/8-T0-1073-F
A20R406	0698-4492	1		RESISTOR 32.4K 1% .125W F TC=0+-100	24546	C4-1/8-T0-3242-F
A20R407	0757-0446	3		RESISTOR 15K 1% .125W F TC=0+-100	24546	C4-1/8-T0-1502-F
A20R408	0757-0446	3		RESISTOR 15K 1% .125W F TC=0+-100	24546	C4-1/8-T0-1502-F
A20R409	0757-0161	9	1	RESISTOR 604 1% .125W F TC=0+-100	24546	C4-1/8-T0-604R-F
A20R410	0757-0410	1	1	RESISTOR 301 1% .125W F TC=0+-100	24546	C4-1/8-T0-301R-F
A20R411	0757-0453	2	2	RESISTOR 30.1K 1% .125W F TC=0+-100	24546	C4-1/8-T0-3012-F
A20R412	0698-3279	0	5	RESISTOR 4.99K 1% .125W F TC=0+-100	24546	C4-1/8-T0-4991-F
A20R413	0757-0433	8	2	RESISTOR 3.32K 1% .125W F TC=0+-100	24546	C4-1/8-T0-3321-F
A20R414	0698-4513	7	2	RESISTOR 97.6K 1% .125W F TC=0+-100	03888	PME55-1/8-T0-9762-F
A20R415	0757-0442	9		RESISTOR 10K 1% .125W F TC=0+-100	24546	C4-1/8-T0-1002-F
A20R416	0757-0442	9		RESISTOR 10K 1% .125W F TC=0+-100	24546	C4-1/8-T0-1002-F
A20R417	0698-3558	8		RESISTOR 4.02K 1% .125W F TC=0+-100	24546	C4-1/8-T0-4021-F
A20R418	0757-0411	2	1	RESISTOR 332 1% .125W F TC=0+-100	24546	C4-1/8-T0-332R-F
A20R419	0757-0442	9		RESISTOR 10K 1% .125W F TC=0+-100	24546	C4-1/8-T0-1002-F
A20R420	0757-0442	9		RESISTOR 10K 1% .125W F TC=0+-100	24546	C4-1/8-T0-1002-F
A20R421	0757-0442	9		RESISTOR 10K 1% .125W F TC=0+-100	24546	C4-1/8-T0-1002-F
A20R422	0757-0442	9		RESISTOR 10K 1% .125W F TC=0+-100	24546	C4-1/8-T0-1002-F
A20R423	0757-0283	6		RESISTOR 2K 1% .125W F TC=0+-100	24546	C4-1/8-T0-2001-F
A20R424 Δ2	0757-0272	3	2	RESISTOR 52.3K 1% .125W	03292	C4-1/8-TO-5232-F
A20R425 Δ2	0757-0457	6	2	RESISTOR 47.5K 1% .125W	03292	C4-1/8-TO-4752-F
A20R426 Δ2	0757-0457	6		RESISTOR 47.5K 1% .125W	03292	C4-1/8-TO-4752-F
A20R427 Δ2	0757-0272	3		RESISTOR 52.3K 1% .125W	03292	C4-1/8-TO-5232-F
A20R428	0757-0465	6		RESISTOR 100K 1% .125W F TC=0+-100	24546	C4-1/8-T0-1003-F
A20R429	0698-3279	0		RESISTOR 4.99K 1% .125W F TC=0+-100	24546	C4-1/8-T0-4991-F
A20R430	0698-3279	0		RESISTOR 4.99K 1% .125W F TC=0+-100	24546	C4-1/8-T0-4991-F
A20R431	0757-0273	4		RESISTOR 3.01K 1% .125W F TC=0+-100	24546	C4-1/8-T0-3011-F
A20R432	0757-0442	9		RESISTOR 10K 1% .125W F TC=0+-100	24546	C4-1/8-T0-1002-F
A20R433	0698-3279	0		RESISTOR 4.99K 1% .125W F TC=0+-100	24546	C4-1/8-T0-4991-F
A20R508	0698-3228	9		RESISTOR 49.9K 1% .125W F TC=0+-100	28480	0698-3228
A20R509	0757-0453	2		RESISTOR 30.1K 1% .125W F TC=0+-100	24546	C4-1/8-T0-3012-F
A20R510	0698-4390	8	1	RESISTOR 66.5 1% .125W F TC=0+-100	24546	C4-1/8-T0-66R5-F
A20R511	0757-0389	3	1	RESISTOR 33.2 1% .125W F TC=0+-100	24546	C4-1/8-T0-33R2-F
A20R512	0690-3911	1	1	RESISTOR 390 10% 1W CC TC=0+529	01121	GB3911
A20R611	0698-4539	7		RESISTOR 402K 1% .125W F TC=0+-100	28480	0698-4539
A20R612	0698-4539	7		RESISTOR 402K 1% .125W F TC=0+-100	28480	0698-4539
A20R613	0757-0401	0	3	RESISTOR 100 1% .125W F TC=0+-100	24546	C4-1/8-T0-101-F
A20R614	2100-3094	4	5	RESISTOR-TRMR 100K 10% C SIDE-ADJ 17-TRN	02111	43P104
A20R615	2100-3095	5	3	RESISTOR-TRMR 200 10% C SIDE-ADJ 17-TRN	02111	43P201
A20R616	2100-3095	5		RESISTOR-TRMR 200 10% C SIDE-ADJ 17-TRN	02111	43P201
A20R617	2100-3898	1		RESISTOR- 20 OHM .10	28480	2100-0398
A20R618	0757-0381	5	1	RESISTOR 15 1% .125W F TC=0+-100	19701	MF4C1/8-T0-15R0-F
A20R700	0683-3315	4		RESISTOR 330 5% .25W FC TC=-400/+600	01121	CB3315
A20R701	0683-5135	0		RESISTOR 51K 5% .25W FC TC=-400/+800	01121	CB5135
A20R702	0683-5135	0		RESISTOR 51K 5% .25W FC TC=-400/+800	01121	CB5135
A20R703	0683-5135	0		RESISTOR 51K 5% .25W FC TC=-400/+800	01121	CB5135
A20R704	0683-5135	0		RESISTOR 51K 5% .25W FC TC=-400/+800	01121	CB5135
A20R705	0683-5135	0		RESISTOR 51K 5% .25W FC TC=-400/+800	01121	CB5135
A20R706	0683-4725	2	5	RESISTOR 4.7K 5% .25W FC TC=-400/+700	01121	CB4725
A20R707	0683-4725	2		RESISTOR 4.7K 5% .25W FC TC=-400/+700	01121	CB4725
A20R708	0683-4725	2		RESISTOR 4.7K 5% .25W FC TC=-400/+700	01121	CB4725
A20S601	3100-3364	2	1	SWITCH-53137-1 HEX	28480	3100-3364
A20U101 †	1826-0347	1	4	IC COMPARATOR GP QUAD 14-DIP-P	01295	LM339 SPEC
A20U102 †	1826-0347	1		IC COMPARATOR GP QUAD 14-DIP-P	01295	LM339 SPEC
A20U103	1820-1144	6		IC GATE TTL LS NOR QUAD 2-INP	01295	SN74LS02N
A20U104 †	1826-0347	1		IC COMPARATOR GP QUAD 14-DIP-P	01295	LM339 SPEC
A20U105	1826-0059	2	4	IC OP AMP GP TO-99	01295	LM201AL

ΔA SEE NOTE ON SCHEMATIC 4

See introduction to this section for ordering information
*Indicates factory selected value

Table 6-4. Replaceable Parts (Cont'd).

Reference Designation	HP Part Number	C D	Qty	Description	Mfr Code	Mfr Part Number
A20U106 Δ6	1820-0478	7	1	IC OP AMP GP 8-DIP-P	18324	LM308H
A20U107	1820-1197	9		IC GATE TTL LS NAND QUAD 2-INP	01295	SN74LS00N
A20U108	1826-0412	1	2	IC COMPARATOR PRCN DUAL 8-DIP-P	27014	LM393N
A20U200 †	1QD4-0044	1	1	SIG-COND G FINELINE	28480	1QD4-0044
A20U201	1826-0138	8	6	IC COMPARATOR GP QUAD 14-DIP-P	01295	LM339N
A20U202	1826-0138	8		IC COMPARATOR GP QUAD 14-DIP-P	01295	LM339N
A20U203	1820-0478	7	1	IC OP AMP LOW-BIAS-H-IMPD TO-99	27014	LM308H
A20U204	1826-0035	4	1	IC OP AMP LOW-DRIFT TO-99	27014	LM308AH
A20U205	1826-0025	2	1	IC OP AMP LOW-DRIFT TO-99	27014	LM208AH
A20U301	1826-0412	1		IC COMPARATOR PRCN DUAL 8-DIP-P	27014	LM393N
A20U302	1858-0054	4		TRANSISTOR ARRAY 14-PIN PLSTC DIP	28480	1858-0054
A20U303	1826-0059	2		IC OP AMP GP TO-99	01295	LM201AL
A20U304 †	1826-0347	1		IC COMPARATOR GP QUAD 14-DIP-P	01295	LM339SPEC
A20U305	1826-0059	2		IC OP AMP GP TO-99	01295	LM201AL
A20U306	1820-1745	3	1	IC GATE CMOS NOR QUAD 2-INP	04713	MC14001BCP
A20U307 †	1826-0371	1	1	IC OP AMP BIFET TO-99	27014	LF256H
A20U308	1826-0059	2		IC OP AMP GP TO-99	01295	LM201AL
A20U401	1820-2258	5	1	IC FF CMOS D-TYPE POS-EDGE-TRIG COM	04713	MC14174BCP
A20U402	1820-1746	4	2	IC BFR CMOS INV HEX	04713	MC14049UBCP
A20U403	1820-1601	0	1	IC GATE CMOS EXCL-OR QUAD 2-INP	0192B	CD4070BE
A20U404	1820-1556	4	2	IC DCDR CMOS BIN 2-TO-4-LINE DUAL 2-INP	0192B	CD4555BF
A20U405	1826-0685	8		IC OP AMP LOW-BIAS-H-IMPD TO-99	27014	LF351H
A20U406	1826-0685	8		IC OP AMP LOW-BIAS-H-IMPD TO-99	27014	LF351H
A20U407	1820-1746	4		IC BFR CMOS INV HEX	04713	MC14049UBCP
A20U408	1826-0138	8		IC COMPARATOR GP QUAD 14-DIP-P	01295	LM339N
A20U409	1826-0138	8		IC COMPARATOR GP QUAD 14-DIP-P	01295	LM339N
A20U500 †	1QD5-0045	4	1	A/D, REF FINELINE, F/U/W A24 REF BOARD	28480	1QD5-0045
A20U500 †	1QE7-0057	3	1	A/D, REF FINELINE, F/U/W A25 REF BOARD	28480	1QE7-0057
A20U504	1820-0493	6		IC OP AMP GP 8-DIP-P	27014	LM307N
A20U505 †	1826-0471	2	1	IC OP AMP LOW-DRIFT TO-99	02180	OP-07CJ
A20U701	1820-1556	4		IC DCDR CMOS BIN 2-TO-4-LINE DUAL 2-INP	0192B	CD4555BF
A20U702	1820-2177	7	1	IC MICPROC-ACCESS NMOS 4-BIT	34649	P8243
A20W3	03456-61601	7	1	CABLE-INPUT SWITCHING TO INPUT AMPL.	28480	03456-61601
				A20 MISCELLANEOUS PARTS		
	0360-1641	1	8	TERMINAL-STUD FKD-TUR PRESS-MTG (FOR K101, K102)	28480	0360-1641
	0360-1916	3	29	TERMINAL-STUD SPCL-FDTHRU PRESS-MTG	28480	0360-1916
	0360-1917	4	47	TERMINAL-STUD SPCL-FDTHRU PRESS-MTG	28480	0360-1917
	0380-1217	9	6	STANDOFF-HEX 7.6-MM-LG 4.8-MM-A/F BRS	00000	ORDER BY DESCRIPTION
	0380-1256	6	2	STANDOFF-HEX 6-MM-LG 4.8-MM-A/F BRS NAT	00000	ORDER BY DESCRIPTION
	1390-0457	9	9	FASTENER-SNAP-IN PLGR 0.076 IN - .165 IN	28480	1390-0457
	1390-0458	0	9	FASTENER-SNAP-IN GROM 0.076 IN - .165 IN	28480	1390-0458
	1600-0868	3	1	CONNECTOR STRIP-14-PIN FINELINE (U500)	28480	1600-0868
	1600-0869	4	1	CONNECTOR STRIP-14-PIN FINELINE (U200)	28480	1600-0869
	1600-0871	8	1	CONNECTOR STRIP-11-PIN FINELINE (U200)	28480	1600-0871
	1600-0873	0	1	CONNECTOR STRIP-13-PIN FINELINE (U500)	28480	1600-0873
	2110-0598	8	2	FUSEHOLDER-SPR TYP.25D-FUSE	28480	2110-0598
A21	03456-66521	0	1	PC ASSEMBLY-CALIBRATION	28480	03456-66521
A21P16	1251-6190	5	1	CONNECTOR 7-PIN M POST TYPE	28480	1251-6190
A21R601	2100-3094	4		RESISTOR-TRMR 100K 10% C SIDE-ADJ 17-TRN	02111	43P104
A21R602	2100-3054	6	3	RESISTOR-TRMR 50K 10% C SIDE-ADJ 17-TRN	02111	43P503
A21R603	2100-3054	6		RESISTOR-TRMR 50K 10% C SIDE-ADJ 17-TRN	02111	43P503
A21R604	2100-3054	6		RESISTOR-TRMR 50K 10% C SIDE-ADJ 17-TRN	02111	43P503
A21R605	2100-3161	6	1	RESISTOR-TRMR 20K 10% C SIDE-ADJ 17-TRN	02111	43P203
A21R606	0698-3454	3	1	RESISTOR 215K 1% .125W F TC=0+-100	24546	C4-1/8-T0-2153-F
A21R607	0757-0463	4	1	RESISTOR 82.5K 1% .125W F TC=0+-100	24546	C4-1/8-T0-8252-F
A21R608	0757-0460	1		RESISTOR 61.9K 1% .125W F TC=0+-100	24546	C4-1/8-T0-6192-F
A21R609	0757-0460	1		RESISTOR 61.9K 1% .125W F TC=0+-100	24546	C4-1/8-T0-6192-F
A21R610	0698-4488	5		RESISTOR 26.7K 1% .125W F TC=0+-100	24546	C4-1/8-T0-2672-F
	0380-1186	1	2	STANDOFF-PRESS-IN 10 MM LONG, M3 X 0.5	28480	0380-1186
A24	03456-66524	3	1	PC ASSEMBLY-REFERENCE BOARD HP	28480	03456-66524
				ASSEMBLY NOT FIELD REPAIRABLE. NEW ASSEMBLY MUST BE ORDERED.		

See introduction to this section for ordering information
*Indicates factory selected value

Table 6-4. Replaceable Parts (Cont'd).

Reference Designation	HP Part Number	C D	Qty	Description	Mfr Code	Mfr Part Number
A25	03456-66525	4	1	PC ASSEMBLY-REFERENCE BOARD, NAT. ASSEMBLY NOT FIELD REPAIRABLE. NEW ASSEMBLY MUST BE ORDERED.	28480	03456-66525
A30	03456-66530	1	1	PC ASSEMBLY-INGUARD LOGIC	28480	03456-66530
A30C1	0180-0309	4		CAPACITOR-FXD 4.7UF+-20% 10VDC TA	56289	150D475X0010A2
A30C2	0180-0309	4		CAPACITOR-FXD 4.7UF+-20% 10VDC TA	56289	150D475X0010A2
A30C3	0160-2208	4	1	CAPACITOR-FXD 330PF +-5% 300VDC MICA	28480	0160-2208
A30C4	0140-0145	2	1	CAPACITOR-FXD 22PF +-5% 500VDC MICA	72136	DM15C220J0500WV1CR
A30C5	0180-0309	4		CAPACITOR-FXD 4.7UF+-20% 10VDC TA	56289	150D475X0010A2
A30C6	0180-0309	4		CAPACITOR-FXD 4.7UF+-20% 10VDC TA	56289	150D475X0010A2
A30C7	0180-0291	3		CAPACITOR-FXD 1UF+-10% 35VDC TA	56289	150D105X9035A2
A30C8	0180-0309	4		CAPACITOR-FXD 4.7UF+-20% 10VDC TA	56289	150D475X0010A2
A30C9	0180-0309	4		CAPACITOR-FXD 4.7UF+-20% 10VDC TA	56289	150D475X0010A2
A30C10	0180-0291	3		CAPACITOR-FXD 1UF+-10% 35VDC TA	56289	150D105X9035A2
A30C11	0180-0309	4		CAPACITOR-FXD 4.7UF+-20% 10VDC TA	56289	150D475X0010A2
A30J31	1251-4682	6		CONNECTOR 3-PIN M POST TYPE	28480	1251-4682
A30J32	1251-4682	6		CONNECTOR 3-PIN M POST TYPE	28480	1251-4682
A30J33	1251-6185	8	2	CONNECTOR 3-PIN M POST TYPE	28480	1251-6185
A30J34	1251-6185	8		CONNECTOR 3-PIN M POST TYPE	28480	1251-6185
A30J35	1251-4682	6		CONNECTOR 3-PIN M POST TYPE	28480	1251-4682

See introduction to this section for ordering information
*Indicates factory selected value

Table 6-4. Replaceable Parts (Cont'd).

Reference Designation	HP Part Number	C D	Qty	Description	Mfr Code	Mfr Part Number
A30J36	1251-4682	6		CONNECTOR 3-PIN M POST TYPE	28480	1251-4682
A30P7	1251-3167	0	1	CONNECTOR 4-PIN F POST TYPE	28480	1251-3167
	1251-3411	7	4	CONTACT-CONN U/W-POST-TYPE FEM CRP	28480	1251-3411
A30P21	1251-6062	0		CONNECTOR 10-PIN F POST TYPE	28480	1251-6062
A30P30	1251-6062	0		CONNECTOR 10-PIN F POST TYPE	28480	1251-6062
A30P34	1258-0141	8		JUMPER REMOVABLE	28480	1258-0141
A30P35	1258-0141	8		JUMPER REMOVABLE	28480	1258-0141
A30P36	1258-0141	8		JUMPER REMOVABLE	28480	1258-0141
A30Q1	1854-0071	7	3	TRANSISTOR NPN SI PD=300MW FT=200MHZ	28480	1854-0071
A30R1	0683-1025	9		RESISTOR 1K 5% .25W FC TC=-400/+600	01121	CB1025
A30R2	0683-1035	1		RESISTOR 10K 5% .25W FC TC=-400/+700	01121	CB1035
A30R3	0683-1025	9		RESISTOR 1K 5% .25W FC TC=-400/+600	01121	CB1025
A30R4	0683-1025	9		RESISTOR 1K 5% .25W FC TC=-400/+600	01121	CB1025
A30R5	0683-4715	0	1	RESISTOR 470 5% .25W FC TC=-400/+600	01121	CB4715
A30R6	0683-3335	8		RESISTOR 33K 5% .25W FC TC=-400/+800	01121	CB3335
A30R7	0683-1025	9		RESISTOR 1K 5% .25W FC TC=-400/+600	01121	CB1025
A30R8	0683-1035	1		RESISTOR 10K 5% .25W FC TC=-400/+700	01121	CB1035
A30R9	0683-2225	3		RESISTOR 2.2K 5% .25W FC TC=-400/+700	01121	CB2225
A30R10	0683-5125	8	1	RESISTOR 5.1K 5% .25W FC TC=-400/+700	01121	CB5125
A30R11	0683-3325	6		RESISTOR 3.3K 5% .25W FC TC=-400/+700	01121	CB3325
A30R12	0683-1035	1		RESISTOR 10K 5% .25W FC TC=-400/+700	01121	CB1035
A30R13	0683-1025	9		RESISTOR 1K 5% .25W FC TC=-400/+600	01121	CB1025
A30R14	0683-2225	3		RESISTOR 2.2K 5% .25W FC TC=-400/+700	01121	CB2225
A30R15	0683-3325	6		RESISTOR 3.3K 5% .25W FC TC=-400/+700	01121	CB3325
A30R16	0683-2225	3		RESISTOR 2.2K 5% .25W FC TC=-400/+700	01121	CB2225
A30R17	0683-3315	4		RESISTOR 330 5% .25W FC TC=-400/+600	01121	CB3315
A30R18	0683-3315	4		RESISTOR 330 5% .25W FC TC=-400/+600	01121	CB3315
A30T1	9100-2616	1		TRANSFORMER-PULSE BIFILAR WOUND; 18.0 MM	28480	9100-2616
A30T2	9100-2616	1		TRANSFORMER-PULSE BIFILAR WOUND; 18.0 MM	28480	9100-2616
A30U1	1820-1199	1		IC INV TTL LS HEX 1-INP	01295	SN74LS04N
A30U2	1820-1197	9		IC GATE TTL LS NAND QUAD 2-INP	01295	SN74LS00N
A30U3	1820-1211	8	1	IC GATE TTL LS EXCL-OR QUAD 2-INP	01295	SN74LS86N
A30U4	1820-1144	6		IC GATE TTL LS NOR QUAD 2-INP	01295	SN74LS02N
A30U5	1820-1197	9		IC GATE TTL LS NAND QUAD 2-INP	01295	SN74LS00N
A30U6	1820-1112	8		IC FF TTL LS D-TYPE POS-EDGE-TRIG	01295	SN74LS74AN
A30U7	1820-1112	8		IC FF TTL LS D-TYPE POS-EDGE-TRIG	01295	SN74LS74AN
A30U8	1820-1199	1		IC INV TTL LS HEX 1-INP	01295	SN74LS04N
A30U9	1820-1445	0	1	IC LCH TTL LS 4-BIT	01295	SN74LS375N
A30U10	1820-1202	7	1	IC GATE TTL LS NAND TPL 3-INP	01295	SN74LS10N
A30U11	1820-1432	5	1	IC CNTR TTL LS BIN SYNCHRO POS-EDGE-TRIG	01295	SN74LS163AN
A30U12	1820-1199	1		IC INV TTL LS HEX 1-INP	01295	SN74LS04N
A30U13	1820-2539	9	1	IC MICPROC NMOS 8-BIT	28480	1820-2539
A30U14	1820-1197	9		IC GATE TTL LS NAND QUAD 2-INP	01295	SN74LS00N
A30U15	1820-1975	1		IC SHF-RGTR TTL LS NEG-EDGE-TRIG PRL-IN	01295	SN74LS165N
A30U16	1820-1759	9		IC BFR TTL LS NON-INV OCTL	27014	DM81LS97N
A30U17	1820-1430	3		IC CNTR TTL LS BIN SYNCHRO POS-EDGE-TRIG	01295	SN74LS161AN
A30U18	1820-0514	2		IC GATE TTL NAND QUAD 2-INP	01295	SN7426N
A30U19	1820-1112	8		IC FF TTL LS D-TYPE POS-EDGE-TRIG	01295	SN74LS74AN
A30U20	1820-1112	8		IC FF TTL LS D-TYPE POS-EDGE-TRIG	01295	SN74LS74AN
A30U21	1820-1272	1	1	IC BFR TTL LS NOR QUAD 2-INP	01295	SN74LS33N
A30U22	1820-1207	2	1	IC GATE TTL LS NAND 8-INP	01295	SN74LS30N
A30U23	1821-0001	4		TRANSISTOR ARRAY 14-PIN PLSTC DIP	01928	CA3046
A30U24	1820-1433	6		IC SHF-RGTR TTL LS R-S SERIAL-IN PRL-OUT	01295	SN74LS164N
A30U25 Δ3	1820-1112	8		IC FF TTL LS D-TYPE	01698	SN74LS74AN
A30X13	1200-0659	2		SOCKET-IC 40-CONT DIP-SLDR	28480	1200-0659
				A30 MISCELLANEOUS PARTS		
A30Y1	0410-1225	4	1	CRYSTAL-4.875 MHZ 50HZ	28480	0410-1225
A30Y1	0410-1226	5	1	CRYSTAL-5.85 MHZ 60HZ	28480	0410-1226
	1200-0546	6	1	SOCKET-XTAL 2-CONT HC-25/U DIP-SLDR	28480	1200-0546
	1390-0457	9		FASTENER-SNAP-IN PLGR 0.076 IN - .165 IN	28480	1390-0457
	1390-0458	0		FASTENER-SNAP-IN GROM 0.076 IN - .165 IN	28480	1390-0458
A40	03456-66540	3	1	PC ASSEMBLY-AC CONVERTER	28480	03456-66540
A40C1	0160-3986	7	1	CAPACITOR-FXD .22UF +-10% 400VDC	28480	0160-3986
A40C2	0140-0196	3		CAPACITOR-FXD 150PF +-5% 300VDC MICA	72136	DM15F151J0300WV1CR
A40C3 Δ5	0160-0205	7	1	CAPACITOR-FXD 62PF +-5% 300VDC MICA	28480	0160-0205
A40C4	0180-0100	3	5	CAPACITOR-FXD 4.7UF+-10% 35VDC TA	56289	150D475X9035B2
A40C5	0180-0100	3		CAPACITOR-FXD 4.7UF+-10% 35VDC TA	56289	150D475X9035B2
A40C6	0160-2264	2	1	CAPACITOR-FXD 20PF +-5% 500VDC CER 0+-30	28480	0160-2264
A40C7	0160-4532	1	5	CAPACITOR-FXD 1000PF +-20% 50VDC CER	28480	0160-4532
A40C8	0180-0100	3		CAPACITOR-FXD 4.7UF+-10% 35VDC TA	56289	150D475X9035B2
A40C9	0180-0100	3		CAPACITOR-FXD 4.7UF+-10% 35VDC TA	56289	150D475X9035B2
A40C10	0160-2246	0	1	CAPACITOR-FXD 3.6PF +-.25PF 500VDC CER	28480	0160-2246

ΔA SEE NOTE ON SCHEMATIC 8

See introduction to this section for ordering information
*Indicates factory selected value

Table 6-4. Replaceable Parts (Cont'd).

Reference Designation	HP Part Number	C D	Qty	Description	Mfr Code	Mfr Part Number
A40C12 Δ5	0160-2150	5	1	CAPACITOR-FXD 33PF +-5% 300VDC MICA	28480	0160-2150
A40C13	0160-0134	1	1	CAPACITOR-FXD 220PF +-5% 300VDC MICA	28480	0160-0134
A40C14	0150-0091	8	2	CAPACITOR-FXD 1.5PF +-.25PF 500VDC CER	28480	0150-0091
A40C15	0150-0091	8		CAPACITOR-FXD 1.5PF +-.25PF 500VDC CER	28480	0150-0091
A40C16	0160-4532	1		CAPACITOR-FXD 1000PF +-20% 50VDC CER	28480	0160-4532
A40C17 Δ3	0160-2257	2	2	CAPACITOR-FXD 10PF +-5% 500VDC CER	28480	0160-2257
A40C18 Δ3	0160-2257	2		CAPACITOR-FXD 10PF +-5% 500VDC CER	28480	0160-2257
A40C19	0160-4532	1		CAPACITOR-FXD 1000PF +-20% 50VDC CER	28480	0160-4532
A40C20	0160-2261	9	1	CAPACITOR-FXD 15PF +-5% 500VDC CER 0+-30	28480	0160-2261
A40C21	0160-2308	5		CAPACITOR-FXD 36PF +-5% 300VDC MICA	28480	0160-2308
A40C22 Δ5	0160-0194	3	1	CAPACITOR-FXD .015UF +-10% 200VDC POLYE	28480	0160-0194
A40C23	0160-4532	1		CAPACITOR-FXD 1000PF +-20% 50VDC CER	28480	0160-4532
A40C24	0160-4532	1		CAPACITOR-FXD 1000PF +-20% 50VDC CER	28480	0160-4532
A40C25	0140-0195	2	1	CAPACITOR-FXD 130PF +-5% 300VDC MICA	72136	DM15F131J0300WV1CR
A40C26*	0140-0190	7	1	CAPACITOR-FXD 39PF +-5% 300VDC MICA	72136	DM15E390J0300WV1CR
A40C26*	0160-2150	5	1	CAPACITOR-FXD 33PF +-5% 300VDC MICA	28480	0160-2150
A40C26*	0160-2308	5	3	CAPACITOR-FXD 36PF +-5% 300VDC MICA	28480	0160-2308
A40C27	0160-3336	1		CAPACITOR-FXD 100PF +-10% 50VDC CER	28480	0160-3336
A40C28	0160-0164	7	1	CAPACITOR-FXD .039UF +-10% 200VDC POLYE	28480	0160-0164
A40C29	0160-3829	7	1	CAPACITOR-FXD .47UF +-10% 50VDC	28480	0160-3829
A40C30	0160-2453	1	1	CAPACITOR-FXD .22UF +-10% 80VDC POLYE	28480	0160-2453
A40C31	0180-0100	3		CAPACITOR-FXD 4.7UF+-10% 35VDC TA	56289	150D475X903S2
A40C32	0160-0376	3	1	CAPACITOR-FXD 68PF +-5% 500VDC MICA	28480	0160-0376
A40C33	0160-0162	5	1	CAPACITOR-FXD .022UF +-10% 200VDC POLYE	28480	0160-0162
A40C34	0160-2266	4	1	CAPACITOR-FXD 24PF +-5% 500VDC CER 0+-30	28480	0160-2266
A40CR1	1901-0040	1		DIODE-SWITCHING 30V 50MA 2NS DO-35	28480	1901-0040
A40CR2	1901-0040	1		DIODE-SWITCHING 30V 50MA 2NS DO-35	28480	1901-0040
A40CR3	1901-0376	6		DIODE-GEN PRP 35V 50MA DO-35	28480	1901-0376
A40CR4	1901-0376	6		DIODE-GEN PRP 35V 50MA DO-35	28480	1901-0376
A40CR5	1901-0915	9	2	DIODE-SCHOTTKY	28480	1901-0915
A40CR7	1901-0915	9		DIODE-SCHOTTKY	28480	1901-0915
A40CR8	1901-0040	1		DIODE-SWITCHING 30V 50MA 2NS DO-35	28480	1901-0040
A40CR9	1901-0040	1		DIODE-SWITCHING 30V 50MA 2NS DO-35	28480	1901-0040
A40CR10	1901-0040	1		DIODE-SWITCHING 30V 50MA 2NS DO-35	28480	1901-0040
A40CR11	1901-0040	1		DIODE-SWITCHING 30V 50MA 2NS DO-35	28480	1901-0040
A40CR12	1901-0040	1		DIODE-SWITCHING 30V 50MA 2NS DO-35	28480	1901-0040
A40CR13	1901-0040	1		DIODE-SWITCHING 30V 50MA 2NS DO-35	28480	1901-0040
A40CR14	1901-0376	6		DIODE-GEN PRP 35V 50MA DO-35	28480	1901-0376
A40CR15	1901-0040	1		DIODE-SWITCHING 30V 50MA 2NS DO-35	28480	1901-0040
A40CR16	1901-0040	1		DIODE-SWITCHING 30V 50MA 2NS DO-35	28480	1901-0040
A40K1	0490-0683	4		RELAY-REED 1A 500MA 1000VDC 5VDC-COIL	28480	0490-0683
A40K2	0490-0683	4		RELAY-REED 1A 500MA 1000VDC 5VDC-COIL	28480	0490-0683
A40P17	1251-6062	0		CONNECTOR 10-PIN F POST TYPE	28480	1251-6062
A40P18	1251-6062	0		CONNECTOR 10-PIN F POST TYPE	28480	1251-6062
A40Q1	1855-0425	7	10	TRANSISTOR J-FET N-CHAN D-MODE TO-92	22229	J304
A40Q2	1855-0308	5	1	TRANSISTOR-JFET DUAL N-CHAN D-MODE SI	28480	1855-0308
A40Q3	1855-0425	7		TRANSISTOR J-FET N-CHAN D-MODE TO-92	22229	J304
A40Q4	1855-0425	7		TRANSISTOR J-FET N-CHAN D-MODE TO-92	22229	J304
A40Q5	1855-0425	7		TRANSISTOR J-FET N-CHAN D-MODE TO-92	22229	J304
A40Q6	1855-0425	7		TRANSISTOR J-FET N-CHAN D-MODE TO-92	22229	J304
A40Q7	1855-0425	7		TRANSISTOR J-FET N-CHAN D-MODE TO-92	22229	J304
A40Q8	1855-0425	7		TRANSISTOR J-FET N-CHAN D-MODE TO-92	22229	J304
A40Q9	1855-0425	7		TRANSISTOR J-FET N-CHAN D-MODE TO-92	22229	J304
A40Q10	1855-0425	7		TRANSISTOR J-FET N-CHAN D-MODE TO-92	22229	J304
A40Q11	1855-0425	7		TRANSISTOR J-FET N-CHAN D-MODE TO-92	22229	J304
A40Q12	1854-0071	7		TRANSISTOR NPN SI PD=300MW FT=200MHZ	28480	1854-0071
A40Q13	1853-0020	4	1	TRANSISTOR PNP SI PD=300MW FT=150MHZ	28480	1853-0020
A40Q14	1855-0081	1	1	TRANSISTOR J-FET N-CHAN D-MODE SI	01295	2N5245
A40Q15	1854-0071	7		TRANSISTOR NPN SI PD=300MW FT=200MHZ	28480	1854-0071
A40Q16	1854-0753	2	2	TRANSISTOR-DUAL NPN TO-52 PD=500MW	28480	1854-0753
A40Q17	1854-0753	2		TRANSISTOR-DUAL NPN TO-52 PD=500MW	28480	1854-0753
A40Q18	1854-0087	5		TRANSISTOR NPN SI PD=360MW FT=75MHZ	28480	1854-0087
A40Q19	1854-0087	5		TRANSISTOR NPN SI PD=360MW FT=75MHZ	28480	1854-0087
A40Q20	1855-0093	5	1	TRANSISTOR J-FET N-CHAN D-MODE TO-18 SI	28480	1855-0093
A40Q21	1855-0420	2		TRANSISTOR J-FET 2N4391 N-CHAN D-MODE	01295	2N4391
A40Q22	1855-0420	2		TRANSISTOR J-FET 2N4391 N-CHAN D-MODE	01295	2N4391
A40Q23	1855-0420	2		TRANSISTOR J-FET 2N4391 N-CHAN D-MODE	01295	2N4391
A40R1	0683-1005	5		RESISTOR 10 5% .25W FC TC=-400/+500	01121	CB1005
A40R2	0683-1005	5		RESISTOR 10 5% .25W FC TC=-400/+500	01121	CB1005
A40R3 Δ8	0764-0016	8	2	RESISTOR 1K 5% 2W MO TC=0+-200	28480	0764-0016
A40R4	0764-0016	8	1	RESISTOR 1K 5% 2W MO TC=0+-200	28480	0764-0016
A40R5	0698-4435	2	2	RESISTOR 2.49K 1% .125W F TC=0+-100	24546	C4-1/8-T0-2491-F

ΔA SEE NOTE ON SCHEMATIC 7

See introduction to this section for ordering information
*Indicates factory selected value

Table 6-4. Replaceable Parts (Cont'd).

Reference Designation	HP Part Number	C D	Qty	Description	Mfr Code	Mfr Part Number
A40R6	0683-1005	5		RESISTOR 10 5% .25W FC TC=-400/+500	01121	CB1005
A40R7	0683-1005	5		RESISTOR 10 5% .25W FC TC=-400/+500	01121	CB1005
A40R8	0698-4435	2		RESISTOR 2.49K 1% .125W F TC=0+-100	24546	C4-1/8-T0-2491-F
A40R9	0698-4440	9	1	RESISTOR 3.4K 1% .125W F TC=0+-100	24546	C4-1/8-T0-3401-F
A40R10 †	0757-0791	1	1	RESISTOR 619K 1% .125W F TC=0+-100	28480	0757-0791
A40R11	0757-0289	0		RESISTOR 13.3K 1% .125W F TC=+-100	24546	C4-1/8-T0-1330-F
A40R12	2100-3094	4		RESISTOR-TRMR 100K 10% C SIDE-ADJ 17-TRN	02111	43P104
A40R13	2100-3094	4		RESISTOR-TRMR 100K 10% C SIDE-ADJ 17-TRN	02111	43P104
A40R14	2100-3095	5		RESISTOR-TRMR 200 10% C SIDE-ADJ 17-TRN	02111	43P201
A40R15	2100-3094	4		RESISTOR-TRMR 100K 10% C SIDE-ADJ 17-TRN	02111	43P104
A40R16	0757-0476	9		RESISTOR 301K 1% .125W F TC=0+-100	24546	C4-1/8-T0-3013-F
A40R17	0698-4511	5	2	RESISTOR 86.6K 1% .125W F TC=0+-100	24546	C4-1/8-T0-8662-F
A40R18	0698-4511	5		RESISTOR 86.6K 1% .125W F TC=0+-100	24546	C4-1/8-T0-8662-F
A40R19	0757-0401	0		RESISTOR 100 1% .125W F TC=0+-100	24546	C4-1/8-T0-101-F
A40R20	0757-0422	5	3	RESISTOR 909 1% .125W F TC=0+-100	24546	C4-1/8-T0-909R-F
A40R21 Δ5,7	0698-4470	5	1	RESISTOR 6.98K 1% .125W F TC=0+-100	24546	C4-1/8-T0-6981-F
A40R22	0757-0465	6		RESISTOR 100K 1% .125W F TC=0+-100	24546	C4-1/8-T0-1003-F
A40R23	2100-3409	5	1	RESISTOR-TRMR 20 10% C TOP-ADJ 1-TRN	28480	2100-3409
A40R24 Δ5	0698-3279	0	1	RESISTOR 4.99K 1% .125W F TC=0+-100	24546	C4-1/8-T0-4991-F
A40R25	0757-0474	7	1	RESISTOR 243K 1% .125W F TC=0+-100	24546	C4-1/8-T0-2433-F
A40R26	0757-0468	9	1	RESISTOR 130K 1% .125W F TC=0+-100	24546	C4-1/8-T0-1303-F
A40R27	0698-3455	4	1	RESISTOR 261K 1% .125W F TC=0+-100	24546	C4-1/8-T0-2613-F
A40R28	0757-0401	0		RESISTOR 100 1% .125W F TC=0+-100	24546	C4-1/8-T0-101-F
A40R29	0698-7803	4	2	RESISTOR 576K 1% .125W F TC=0+-100	28480	0698-7803
A40R30	0698-4477	2	1	RESISTOR 10.5K 1% .125W F TC=0+-100	24546	C4-1/8-T0-1052-F
A40R31	0698-3223	4	1	RESISTOR 1.24K 1% .125W F TC=0+-100	24546	C4-1/8-T0-1241-F
A40R32	0757-0290	5	1	RESISTOR 6.19K 1% .125W F TC=0+-100	19701	MF4C1/8-T0-6191-F
A40R33	0757-0422	5		RESISTOR 909 1% .125W F TC=0+-100	24546	C4-1/8-T0-909R-F
A40R34	0757-0400	9	2	RESISTOR 90.9 1% .125W F TC=0+-100	24546	C4-1/8-T0-90R9-F
A40R35	0698-4479	4	2	RESISTOR 14K 1% .125W F TC=0+-100	24546	C4-1/8-T0-1402-F
A40R36	0757-0400	9		RESISTOR 90.9 1% .125W F TC=0+-100	24546	C4-1/8-T0-90R9-F
A40R37	0757-0422	5		RESISTOR 909 1% .125W F TC=0+-100	24546	C4-1/8-T0-909R-F
A40R38	0698-4479	4		RESISTOR 14K 1% .125W F TC=0+-100	24546	C4-1/8-T0-1402-F
A40R39	0698-3581	7	1	RESISTOR 13.7K 1% .125W F TC=0+-100	24546	C4-1/8-T0-1372-F
A40R40	0698-3215	4	1	RESISTOR 499K 1% .125W F TC=0+-100	28480	0698-3215
A40R41	0698-7803	4		RESISTOR 576K 1% .125W F TC=0+-100	28480	0698-7803
A40R42	0757-0465	6		RESISTOR 100K 1% .125W F TC=0+-100	24546	C4-1/8-T0-1003-F
A40R43	0698-8343	9	1	RESISTOR 590K 1% .125W F TC=0+-100	28480	0698-8343
A40R44	0698-4539	7		RESISTOR 402K 1% .125W F TC=0+-100	28480	0698-4539
A40R45	0757-0279	0		RESISTOR 3.16K 1% .125W F TC=0+-100	24546	C4-1/8-T0-3161-F
A40R46	0757-0270	1	1	RESISTOR 249K 1% .125W F TC=0+-100	24546	C4-1/8-T0-2493-F
A40R47	0757-0465	6		RESISTOR 100K 1% .125W F TC=0+-100	24546	C4-1/8-T0-1003-F
A40R48	0757-0465	6		RESISTOR 100K 1% .125W F TC=0+-100	24546	C4-1/8-T0-1003-F
A40R49	0757-0465	6		RESISTOR 100K 1% .125W F TC=0+-100	24546	C4-1/8-T0-1003-F
A40R50	0757-0465	6		RESISTOR 100K 1% .125W F TC=0+-100	24546	C4-1/8-T0-1003-F
A40R51	0757-0465	6		RESISTOR 100K 1% .125W F TC=0+-100	24546	C4-1/8-T0-1003-F
A40R52	0757-0465	6		RESISTOR 100K 1% .125W F TC=0+-100	24546	C4-1/8-T0-1003-F
A40R53	0757-0465	6		RESISTOR 100K 1% .125W F TC=0+-100	24546	C4-1/8-T0-1003-F
A40R54	0757-0465	6		RESISTOR 100K 1% .125W F TC=0+-100	24546	C4-1/8-T0-1003-F
A40R55	0757-0465	6		RESISTOR 100K 1% .125W F TC=0+-100	24546	C4-1/8-T0-1003-F
A40R56	0683-4725	2		RESISTOR 4.7K 5% .25W FC TC=-400/+700	01121	CB4725
A40R57	0683-4725	2		RESISTOR 4.7K 5% .25W FC TC=-400/+700	01121	CB4725
A40R58	0757-0465	6		RESISTOR 100K 1% .125W F TC=0+-100	24546	C4-1/8-T0-1003-F
A40R59	0757-0465	6		RESISTOR 100K 1% .125W F TC=0+-100	24546	C4-1/8-T0-1003-F
A40R60 Δ5	0698-3486	1	1	RESISTOR 232 1% .125W F TC=0+-100	24546	C4-1/8-T0-232K-F
A40R61	0698-4383	9	1	RESISTOR 53.6 1% .125W F TC=0+-100	24546	C4-1/8-T0-53R6-F
A40R62	0698-4373	7	1	RESISTOR 26.7 1% .125W F TC=0+-100	03888	PME55-1/8-T0-26R7-F
A40R63	0757-0465	6		RESISTOR 100K 1% .125W F TC=0+-100	24546	C4-1/8-T0-1003-F
A40R64	0757-0465	6		RESISTOR 100K 1% .125W F TC=0+-100	24546	C4-1/8-T0-1003-F
A40R65	0698-3279	0		RESISTOR 4.99K 1% .125W F TC=0+-100	24546	C4-1/8-T0-4991-F
A40R66	0757-0440	7	1	RESISTOR 7.5K 1% .125W F TC=0+-100	24546	C4-1/8-T0-7501-F
A40R67	0757-0433	8		RESISTOR 3.32K 1% .125W F TC=0+-100	24546	C4-1/8-T0-3321-F
A40R68	0699-0152	4	1	RESISTOR 649K 1% .125W F TC=0+-100	28480	0699-0152
A40R69	0757-0465	6		RESISTOR 100K 1% .125W F TC=0+-100	24546	C4-1/8-T0-1003-F
A40R70	0757-0281	4	1	RESISTOR 2.74K 1% .125W F TC=0+-100	24546	C4-1/8-T0-2741-F
A40R71	0698-3382	6	1	RESISTOR 5.49K 1% .125W F TC=0+-100	24546	C4-1/8-T0-5491-F
A40R72	0698-4513	7		RESISTOR 97.6K 1% .125W F TC=0+-100	03888	PME55-1/8-T0-9762-F
A40R73	0698-4473	8	1	RESISTOR 8.06K 1% .125W F TC=0+-100	24546	C4-1/8-T0-8061-F
A40R74	0757-0280	3		RESISTOR 1K 1% .125W F TC=0+-100	24546	C4-1/8-T0-1001-F
A40R75	0698-7332	4	2	RESISTOR 1M 1% .125W F TC=0+-100	28480	0698-7332
A40R76	0698-3266	5	1	RESISTOR 237K 1% .125W F TC=0+-100	24546	C4-1/8-T0-2373-F
A40R77	2100-0569	2	2	RESISTOR-TRMR 1M 20% C TOP-ADJ 1-TRN	28480	2100-0569
A40R78	0698-7962	6	1	RESISTOR 976K 1% .125W F TC=0+-100	07716	CEA-1/8-T0-9763-F
A40R79	0698-4509	1	1	RESISTOR 80.6K 1% .125W F TC=0+-100	24546	C4-1/8-T0-8062-F
A40R80	0757-0442	9		RESISTOR 10K 1% .125W F TC=0+-100	24546	C4-1/8-T0-1002-F

See introduction to this section for ordering information
*Indicates factory selected value

Table 6-4. Replaceable Parts (Cont'd).

Reference Designation	HP Part Number	C D	Qty	Description	Mfr Code	Mfr Part Number
A40R81	0757-0280	3		RESISTOR 1K 1% .125W F TC=0+-100	24546	C4-1/8-T0-1001-F
A40R82	0698-4486	3	1	RESISTOR 24.9K 1% .125W F TC=0+-100	24546	C4-1/8-T0-2492-F
A40R83	0698-4519	3	1	RESISTOR 140K 1% .125W F TC=0+-100	24546	C4-1/8-T0-1403-F
A40R84	0757-0280	3		RESISTOR 1K 1% .125W F TC=0+-100	24546	C4-1/8-T0-1001-F
A40R85	0698-7332	4		RESISTOR 1M 1% .125W F TC=0+-100	28480	0698-7332
A40R86	2100-0569	2		RESISTOR-TRMR 1M 20% C TOP-ADJ 1-TRN	28480	2100-0569
A40U1	1820-0477	6		IC OP AMP GP 8-DIP-P	18324	LM301AN
A40U2	1826-0413	2	3	IC OP AMP LOW-BIAS-H-IMPD TO-99	34371	HA2-2605-5
A40U3 †	1QD6-0046	7	1	AC GAIN FINELINE	28480	1QD6-0046
A40U4	1826-0413	2		IC OP AMP LOW-BIAS-H-IMPD TO-99	34371	HA2-2605-5
A40U5	1826-0413	2		IC OP AMP LOW-BIAS-H-IMPD TO-99	34371	HA2-2605-5
A40U6	1826-0109	3	1	IC OP AMP WB TO-99	34371	HA2-2625-B0593
A40U7	1826-0357	3	1	IC OP AMP WB TO-99	27014	LF357H
A40U8	1826-0138	8		IC COMPARATOR GP QUAD 14-DIP-P	01295	LM339N
A40U9	1826-0138	8		IC COMPARATOR GP QUAD 14-DIP-P	01295	LM339N
A40U10	1820-1144	6		IC GATE TTL LS NOR QUAD 2-INP	01295	SN74LS02N
A40U11	1826-0138	8		IC COMPARATOR GP QUAD 14-DIP-P	01295	LM339N
A40U12	1820-0493	6		IC OP AMP GP 8-DIP-P	27014	LM307N
A40U13	1820-0493	6		IC OP AMP GP 8-DIP-P	27014	LM307N
				A40 MISCELLANEOUS PARTS		
	0360-1641	1		TERMINAL-STUD FKD-TUR PRESS-MTG	28480	0360-1641
	0360-1916	3		TERMINAL-STUD SPCL-FDTHRU PRESS-MTG	28480	0360-1916
	0360-1917	4		TERMINAL-STUD SPCL-FDTHRU PRESS-MTG	28480	0360-1917
	0380-1217	9		STANDOFF-HEX 7.6-MM-LG 4.8-MM-A/F BRS	00000	ORDER BY DESCRIPTION
	1600-0870	7	2	CONNECTOR STRIP FOR U3 FINELINE	28480	1600-0870
	1600-0872	9	2	CONNECTOR STRIP FOR U3 FINELINE	28480	1600-0872

See introduction to this section for ordering information
*Indicates factory selected value

Table 6-4. Replaceable Parts (Cont'd).

Reference Designation	HP Part Number	C D	Qty	Description	Mfr Code	Mfr Part Number
				CHASSIS MOUNTED PARTS		
C1	0180-0291	3	1	CAPACITOR-FXD 1UF+-10% 35VDC TA	56289	150D105X9035A2
C2	0150-0012	3	1	CAPACITOR-FXD .01UF +-20% 1KVDC CER	56289	C023A102J103MS38
CR1	1902-1217	8	2	DIODE-ZNR 6.2V 5% DO-4 PD=10W TC=+.035%	28480	1902-1217
CR2	1902-1217	8		DIODE-ZNR 6.2V 5% DO-4 PD=10W TC=+.035%	28480	1902-1217
CR5 Δ10	1906-0205	0	1	DIODE ASSEMBLY BRIDGE	28480	1906-0205
E1	1970-0085	9	1	TUBE-ELECTRON SURGE V PTCTR	28480	1970-0085
F1	2110-0033	6	1	FUSE .75A 250V 1.25X.25 (FOR 100/120V OPERATION)	28480	2110-0033
F1	2110-0065	4	1	FUSE .375A 250V NTD 1.25X.25 UL (FOR 220/240V OPERATION)	28480	2110-0065
	2110-0564	8	1	FUSEHOLDER BODY 12A MAX FOR UL	H9027	031.1657
	2110-0565	9	1	FUSEHOLDER CAP 12A MAX FOR UL	28480	2110-0565
	2110-0569	3	1	FUSEHOLDER NUT	28480	2110-0569
J5	1251-6192	7	2	CONNECTOR 15-PIN M POST TYPE	28480	1251-6192
J6	1251-6192	7		CONNECTOR 15-PIN M POST TYPE	28480	1251-6192
J8	1251-6193	8	1	CONNECTOR 6-PIN M POST TYPE	28480	1251-6193
J15	1251-6184	7	1	CONNECTOR 8-PIN M POST TYPE	28480	1251-6184
J17	1251-6194	9	4	CONNECTOR 10-PIN M POST TYPE	28480	1251-6194
J18	1251-6194	9		CONNECTOR 10-PIN M POST TYPE	28480	1251-6194
J21	1251-6194	9		CONNECTOR 10-PIN M POST TYPE	28480	1251-6194
J30	1251-6194	9		CONNECTOR 10-PIN M POST TYPE	28480	1251-6194
J38	5060-7478	3	2	TERMINAL ASSEMBLY-FRONT INPUT	28480	5060-7478
J39	5060-7478	3		TERMINAL ASSEMBLY-REAR INPUT	28480	5060-7478
J40	1250-0083	1	2	CONNECTOR-RF BNC FEM SGL-HOLE-FR 50-OHM	28480	1250-0083
J41	1250-0083	1		CONNECTOR-RF BNC FEM SGL-HOLE-FR 50-OHM	28480	1250-0083
J42	9100-3910	0	1	FILTER-LINE	28480	9100-3910
	8120-1348	5	1	CABLE ASSY 18AWG 3-CNDCT BLK-JKT	28480	8120-1348
R1	0764-0028	2	1	RESISTOR 100K 5% 2W MO TC=0+-200	28480	0764-0028
RV1	0837-0196	0	1	MO VARISTOR 430V RMS	28480	0837-0196
S1	3101-2216	3	1	SWITCH-PB DPDT ALTNG 4A 250VAC	28480	3101-2216
	5041-1682	9	1	KEY CAP-LINE	28480	5041-1682
S2	3101-0461	6	1	SWITCH-PB 6PDT ALTNG .5A 100VAC	28480	3101-0461
S3	3101-1299	0	2	SWITCH-GUARD, PB DPDT	28480	3101-1299
S4	3101-1299	0		SWITCH-GUARD, PB DPDT	28480	3101-1299
	0370-0603	4	3	KEY CAP .714 IN SQ: .55. IN HI FOR	28480	0370-0603
S5	3101-2298	1	2	SWITCH-SLIDE, VOLTAGE SELECT	28480	3101-2298
S6	3101-2298	1		SWITCH-SLIDE, VOLTAGE SELECT	28480	3101-2298
T1	9100-0469	8	1	TRANSFORMER-POWER 100/120/220/240V	28480	9100-0469
U1	1826-0181	1	1	VOLTAGE REGULATOR- LM323K	27014	LM323K
X1	1200-0479	4	1	SOCKET-XSTR 2-CONT TO-3 SLDR-TUR	28480	1200-0479
	0340-0580	3	1	INSULATOR-XSTR THRM-CNDCT	28480	0340-0580
				NOTE MANY OF THESE PARTS ARE ILLUSTRATED IN FIGURES 6-3 TO 6-11.		

See introduction to this section for ordering information
*Indicates factory selected value

Table 6-4. Replaceable Parts (Cont'd).

Reference Designation	HP Part Number	C D	Qty	Description	Mfr Code	Mfr Part Number
				MISCELLANEOUS PARTS		
	03456-00101	4	1	CHASSIS-INGUARD, RIGHT	28480	03456-00101
	03456-00102	5	1	CHASSIS-INGUARD, LEFT	28480	03456-00102
	03456-00103	6	1	GUSSET-OUTGUARD	28480	03456-00103
Δ10	03456-00105	8	1	GAUSSET-OUTGUARD	28480	03456-00105
	03456-00201	5	1	PANEL-FRONT	28480	03456-00201
	03456-00202	6	1	PANEL-CALIBRATE	28480	03456-00202
	03456-00204	8	1	PANEL-SUB	28480	03456-00204
Δ10	03456-00205	9	1	REAR PANEL	28480	03456-00205
Δ10	03456-00603	0	1	SHIELD-OUTGUARD	28480	03456-00603
	03456-01201	7	1	BRACKET-TRANSFORMER	28480	03456-01201
	03456-01203	9	1	BRACKET-PANEL MOUNT	28480	03456-01203
	03456-01204	0	1	BRACKET-GUSSET	28480	03456-01204
	03456-04101	2	1	SHIELD-INGUARD	28480	03456-04101
	03456-04103	4	1	SHIELD-RMS CONVERTER	28480	03456-04103
	03456-04104	5	1	SHIELD-TOP	28480	03456-04104
	03456-04105	6	1	SHIELD-BOTTOM	28480	03456-04105
Δ10	03456-04108	9	1	TOP COVER	28480	03456-04108
Δ10	03456-04109	0	2	POWER SHIELD	28480	03456-04109
	03456-04401	5	1	FRAME-REAR MOD	28480	03456-04401
	0390-0006	3	4	INSULATOR-FLG-BSHG NYLON	28480	0390-0006
	1460-1345	5	2	TILT STAND SST	28480	1460-1345
	5061-0088	9	1	FRONT HANDLE KIT	28480	5061-0088
	0360-1996	9	1	TERMINAL-STUD DBL-TUR PRESS-MTG	28480	0360-1996
	5041-3076	4	2	CAP-LOCKING FOR TERMINAL SWITCH	28480	5041-3076
	4040-1645	1	33	LIGHT PIPE-PANEL	28480	4040-1645
	4114-0868	5	1	WINDOW-DISPLAY	28480	4114-0868
	5001-0438	7	2	TRIM STRIP	28480	5001-0438
	5020-8801	4	1	FRONT FRAME	28480	5020-8801
	5020-8832	1	2	SIDE STRUTS	28480	5020-8832
	5040-7023	2	2	PUSHROD-FOR S1 AND S2	28480	5040-7023
	5040-7201	8	4	FOOT(STANDARD)	28480	5040-7201
	5040-7202	9	1	TRIM-TOP	28480	5040-7202
	5040-7219	8	1	STRAP HANDLE CAP-FRONT	28480	5040-7219
	5040-7220	1	1	STRAP HANDLE CAP-REAR	28480	5040-7220
	5060-9804	3	1	STRAP HANDLE-18-IN	28480	5060-9804
	5060-9847	4	1	BOTTOM COVER	28480	5060-9847
	5060-9876	9	1	SIDE COVER ASSEMBLY	28480	5060-9876
Δ10	5060-9907	7	1	SIDE COVER-NO HANDLE	28480	5060-9907
	7120-3528	6	1	LABEL-CAUTION	28480	7120-3528
	7120-4006	7	1	LABEL-INFORMATION	28480	7120-4006
	7120-8607	2	1	LABEL-METRIC	28480	7120-8607

NOTE

MANY OF THESE PARTS ARE ILLUSTRATED IN FIGURE 6-1 AND FIGURES 6-3 TO 6-11.

See introduction to this section for ordering information
*Indicates factory selected value

NOTE

The MP Designations used on this page apply only to those parts called out in Figure 6-1.

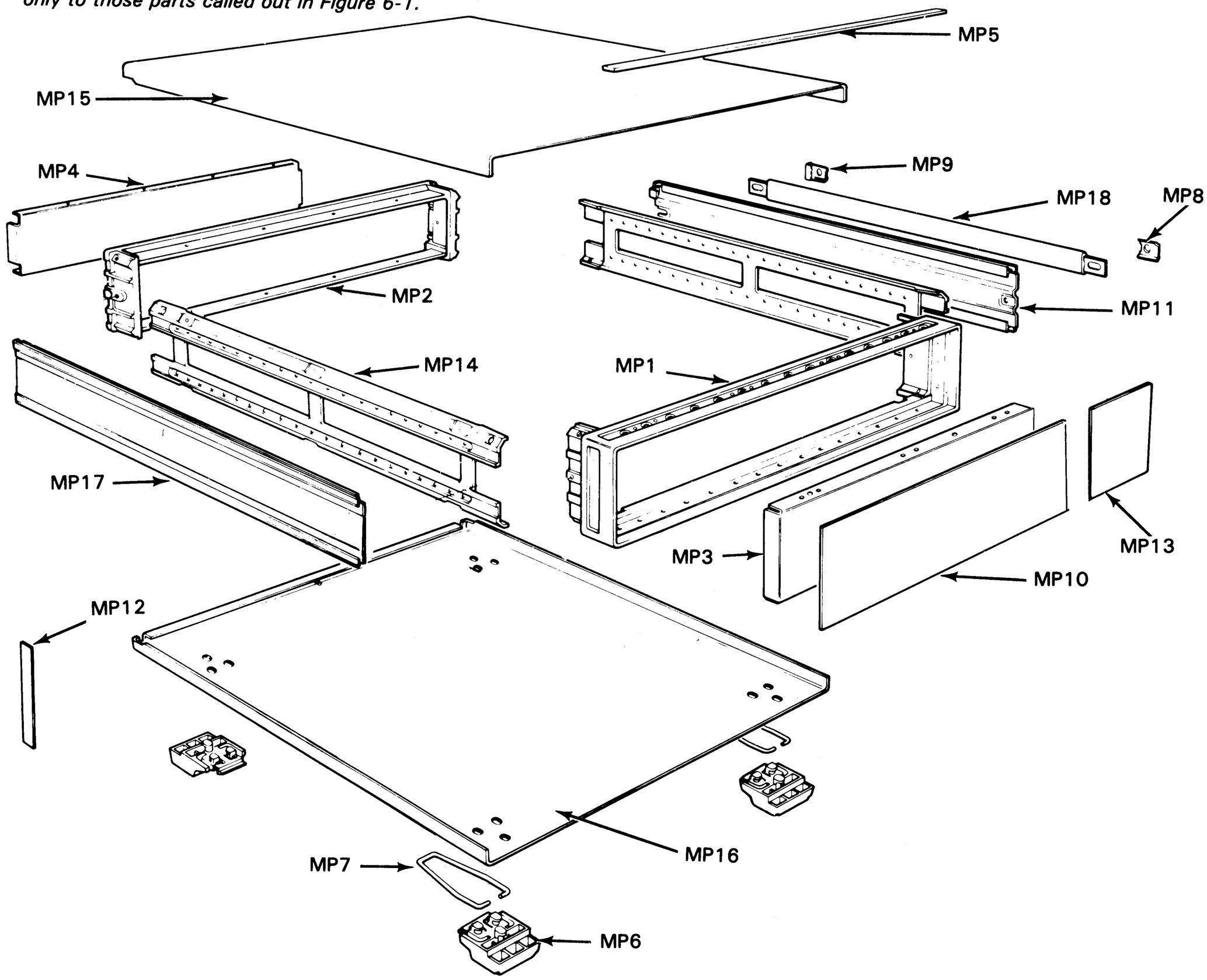

Reference Designation	-hp- Part Number	C D	Qty	Description
MP1	5020-8801	4	1	FRONT-FRAME
MP2	03456-04401	5	1	REAR-FRAME MOD
MP3	03456-00204	8	1	SUB-PANEL
MP4	03456-00203	7	1	REAR PANEL
MP5	5040-7202	9	1	TOP TRIM, FRONT FRAME
MP6	5040-7201	8	4	FOOT
MP7	1460-1345	5	2	TILT STAND
MP8	5040-7219	8	1	STRAP HANDLE CAP-FRONT
MP9	5040-7220	1	1	STRAP HANDLE CAP-REAR
MP10	03456-00201	5	1	FRONT PANEL
MP11	5060-9876	9	1	SIDE COVER, W/HANDLE RECESS
MP12	5001-0438	7	2	SIDE TRIM, FRONT FRAME
MP13	03456-00202	6	1	PANEL-CALIBRATE
MP14	5020-8832	1	2	SIDE STRUT
MP15 Δ_{10}	03456-04108	9	1	TOP COVER
MP16	5060-9847	4	1	BOTTOM COVER
MP17 Δ_{10}	5060-9907	7	1	SIDE COVER, NO HANDLE
MP18	5060-9804	3	1	STRAP HANDLE-18 IN

Figure 6-1. Chassis/Cabinet Parts.

NOTE

The MP Designations used on this page apply only to those parts called out in Figure 6-2.

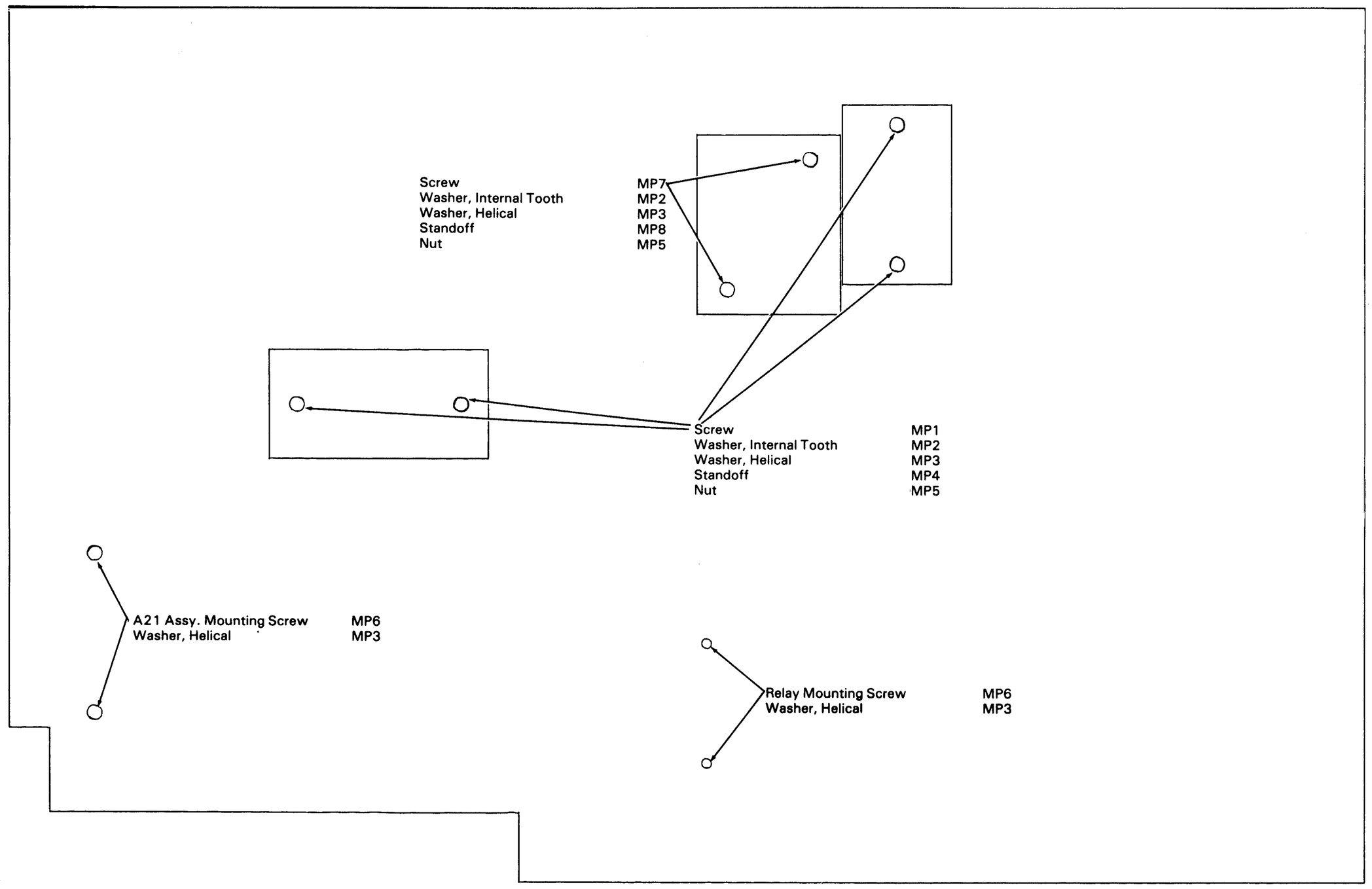

Reference Designation	-hp- Part Number	C D	Qty	Description
MP1	0515-0064	9	4	SCREW-MACH M3 X 0.5 16 MM-LG PAN-HD
MP2	2190-0521	5	6	WASHER-LK INTL T 3 MM 2.3-MM-ID
MP3	2190-0584	0	10	WASHER-LK HLCL 3.0 MM 3.1-MM-ID
MP4	0380-1217	9	4	STANDOFF-HEX 7.6-MM-LC 4.8-MM-A/F
MP5	0535-0003	8	6	NUT-HEX DBL-CHAM M3 X 0.50 1.8 MM-THK
MP6	0515-0211	8	4	SCREW-MACH M3 X 0.5 6MM-LG PAN-HD
MP7	0515-0057	0	2	SCREW-MACH M3 X 0.5 20MM-LG-PAN-HD
MP8	0380-1256	6	2	STANDOFF, THREADED-M3 X 6.0

Figure 6-2. A20 Board Miscellaneous Fastener Parts.

NOTE

The MP Designations used on this page apply only to those parts called out in Figure 6-3.

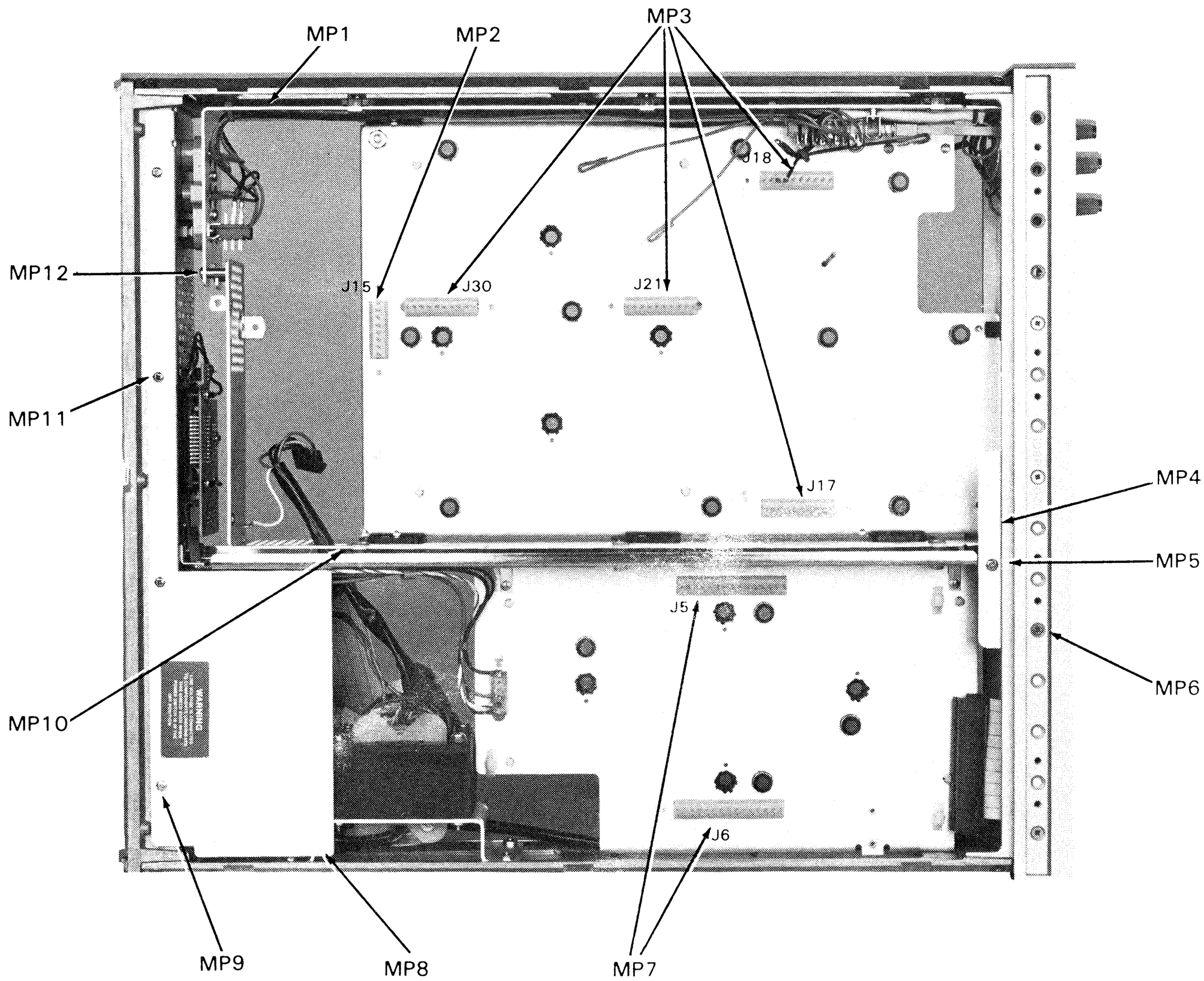

Reference Designation	-hp- Part Number	C D	Qty	Description
MP1	03456-04109	4	1	Chassis-Inguard-Right
MP2	1251-6184	7	1	Connector 8 Pin M Post Type
MP3	1251-6194	9	4	Connector 10 Pin M Post Type
MP4	03456-00204	8	1	Sub-Panel
MP5	0515-0212		1	Screw-Mach M3.5 x 0.6 6 MM-LG Pan-HD
MP6	0515-0219		4	Screw-Mach M3 x 0.5 6MM-LG Flat-HD
MP7	1251-6192	7	2	Connector 15-Pin M Post Type
MP8 Δ_{10}	03456-04109	0	1	Power Shield
MP9	0515-0211	8	2	Screw-Mach M3 x 0.5 6MM-LG Pan-HD
MP10	03456-00102	5	1	Chassis-Inguard-Left
MP11	0515-0211	8	4	Screw-Mach M3 x 0.5 6MM-LG Pan-HD
MP12	0515-0212		4	Screw-Mach M3.5 x 0.6 6MM-LG Pan HD

Figure 6-3. Top View of Chassis with PC Boards Removed.

NOTE

The MP Designations used on this page apply only to those parts called out in Figure 6-4.

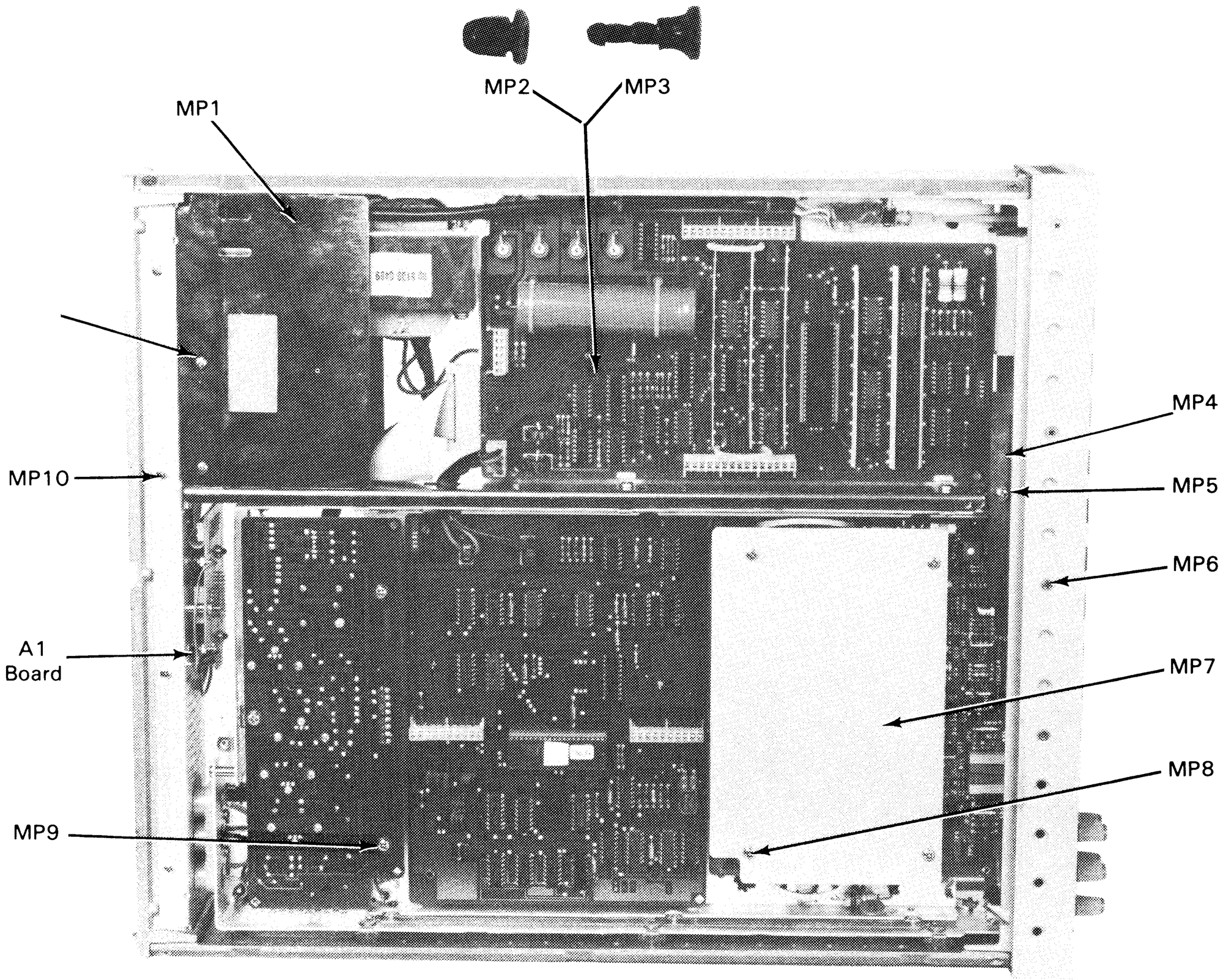

Reference Designation	-hp- Part Number	C D	Qty	Description
MP1 Δ_{10}	03456-04109	0	1	Power Shield
MP2	1390-0458	0	4	Fastener-Snap-In Grommet
MP3	1390-0457	9	4	Fastener-Snap-In Plunger
MP4	03456-01204	0	1	Bracket-Gusset
MP5	0515-0212		1	Screw-Mach M3.5 x 0.6 6MM-LG Pan-HD
MP6	0515-0219		4	Screw-Mach M3 X 0.5 6MM-LG Flat-HD
MP7	03456-04103	4	1	Shield-RMS Converter
MP8	0515-0215		4	Screw-Mach M3.5 x 0.6 20MM-LG Pan-HD
MP9	0515-0212		3	Screw-Mach M3.5 x 0.6 6MM-LG Pan-HD
MP10	0515-0211	8	4	Screw-Mach M3 x 0.5 6MM-LG Pan-HD
MP11	0515-0211	8	2	Screw-Mach M3 x 0.5 6MM-LG Pan-HD

Figure 6-4. Bottom View of Chassis with PC Boards Installed.

NOTE

The MP Designations used on this page apply only to those parts called out in Figure 6-5.

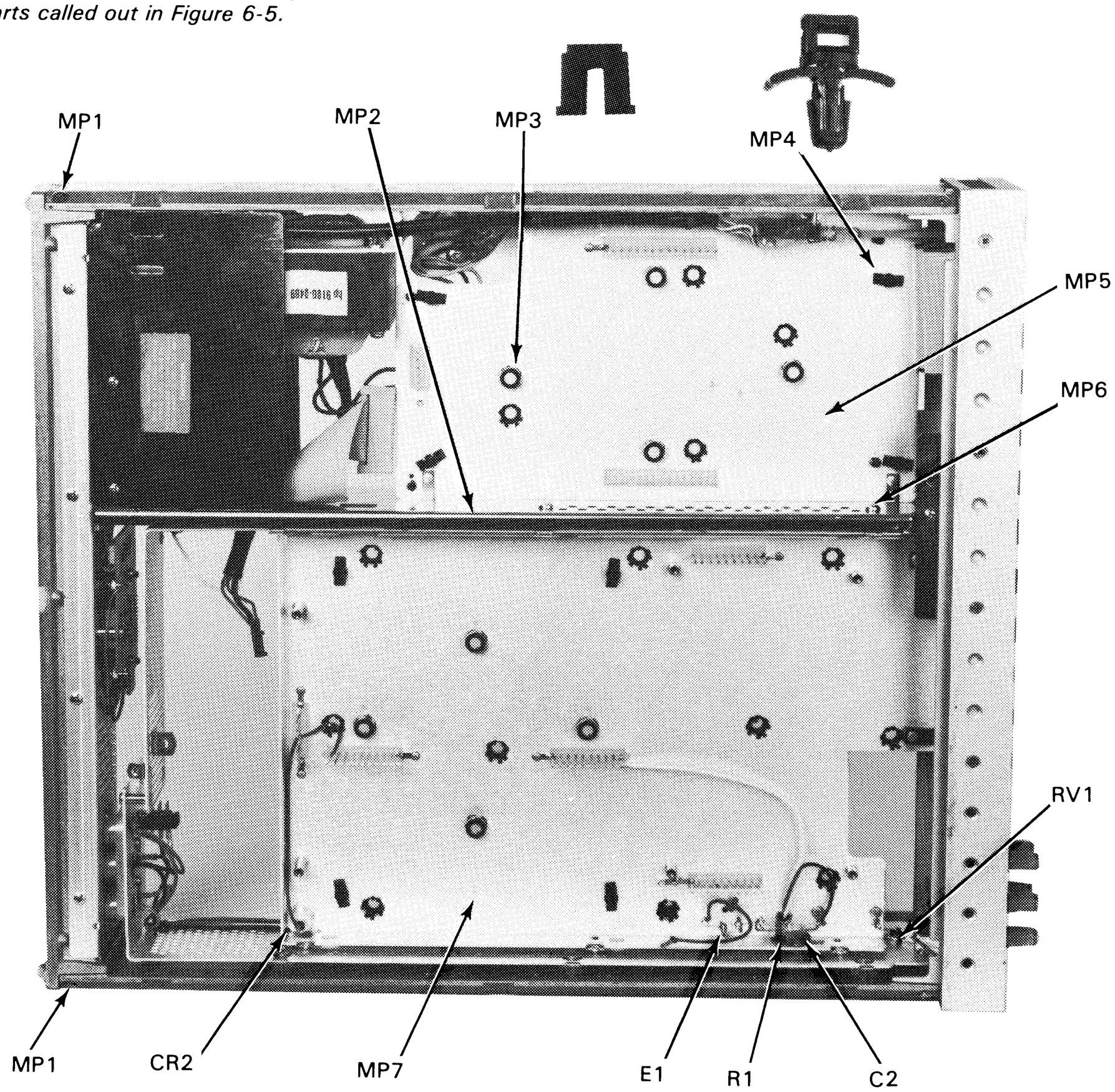

Reference Designation	-hp- Part Number	C D	Qty	Description
MP1	2510-0192		8	Screw-Mach 8-32 x .25 100° Flat-HD
MP2	03456-00103	6	1	Gusset-Outguard
MP3	4040-1415		8	Spacer-Insl
MP4	0380-1267		8	Spacer-Poly
MP5	03456-04102	3	1	Shield-Outguard
MP6	0624-0461		6	Screw-Tapping 8-16 x .5 Pan HD Plastite
MP7	03456-04101	2	1	Shield-Inguard
C2	0150-0012	3	1	Capacitor-Fxd .01 μF
CR2	1902-1217	8	1	Diode-Znr 6.2 V
E1	1970-0085	9	1	Tube-Electron Surge Protector
R1	0764-0028	2	1	Resistor, 100K 5% 2W
RV1	0837-0196	0	1	MO Varistor 430 V RMS

Figure 6-5. Bottom View of Chassis with PC Boards Removed.

NOTE

The MP Designations used on this page apply only to those parts called out in Figure 6-6 (A, B, & C).

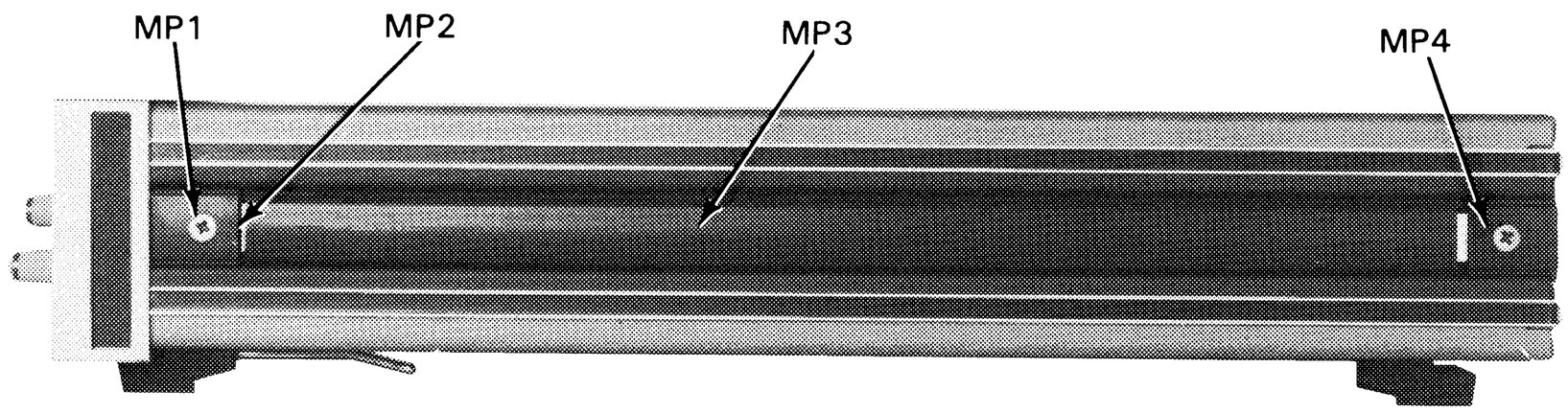

A. Side View of Chassis Showing Handle/Hardware.

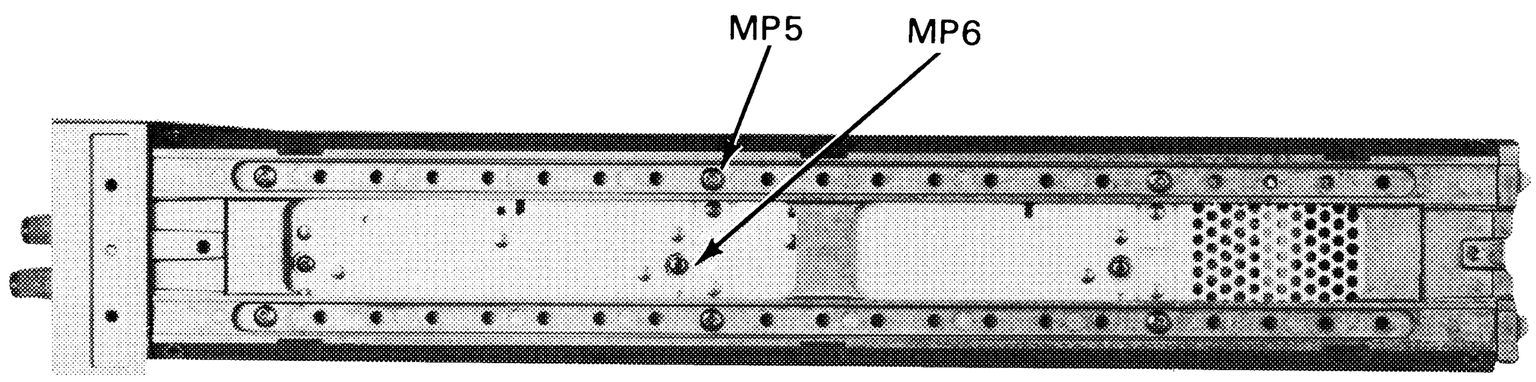

B. Side View of Chassis with Side Cover Removed.

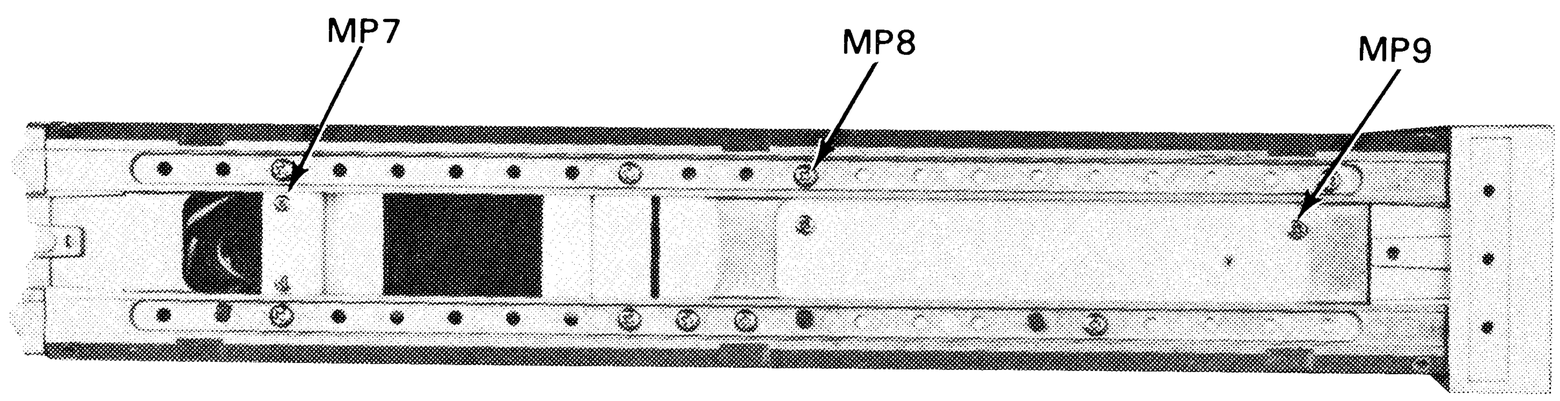

C. Opposite Side of Chassis with Side Cover Removed.

Reference Designation	-hp- Part Number	C D	Qty	Description
MP1	2680-0172		2	Screw-Mach 10-32
MP2	5040-7219	8	1	Strap Handle Cap-Front
MP3	5060-9804	3	1	Strap Handle-18 In
MP4	5040-7220	1	1	Strap Handle Cap-Rear
MP5	0624-0461		6	Screw-Tapping 8-16 x .5 Pan Head Plastite
MP6	0515-0211	8	3	Screw-Mach M3 x 0.5 6MM-LG Pan-HD
MP7	0515-0211	8	2	Screw-Mach M3 x 0.5 6MM-LG Pan-HD
MP8	0515-0210		9	Screw-Mach M4 x 0.7 x 8MM-LG Pan-HD
MP9	0515-0212		2	Screw-Mach M3.5 x 0.6 6MM-LG Pan-HD

Figure 6-6. Side Views of Chassis.

NOTE

The MP Designations used on this page apply only to those parts called out in Figure 6-7 (A & B).

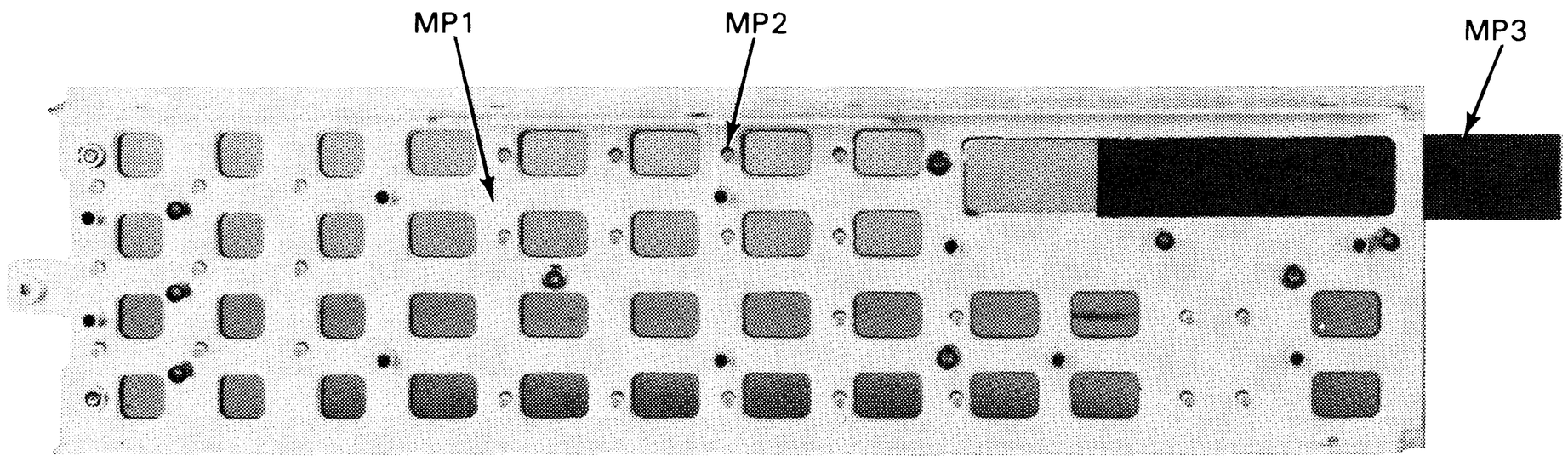

A. Front Panel.

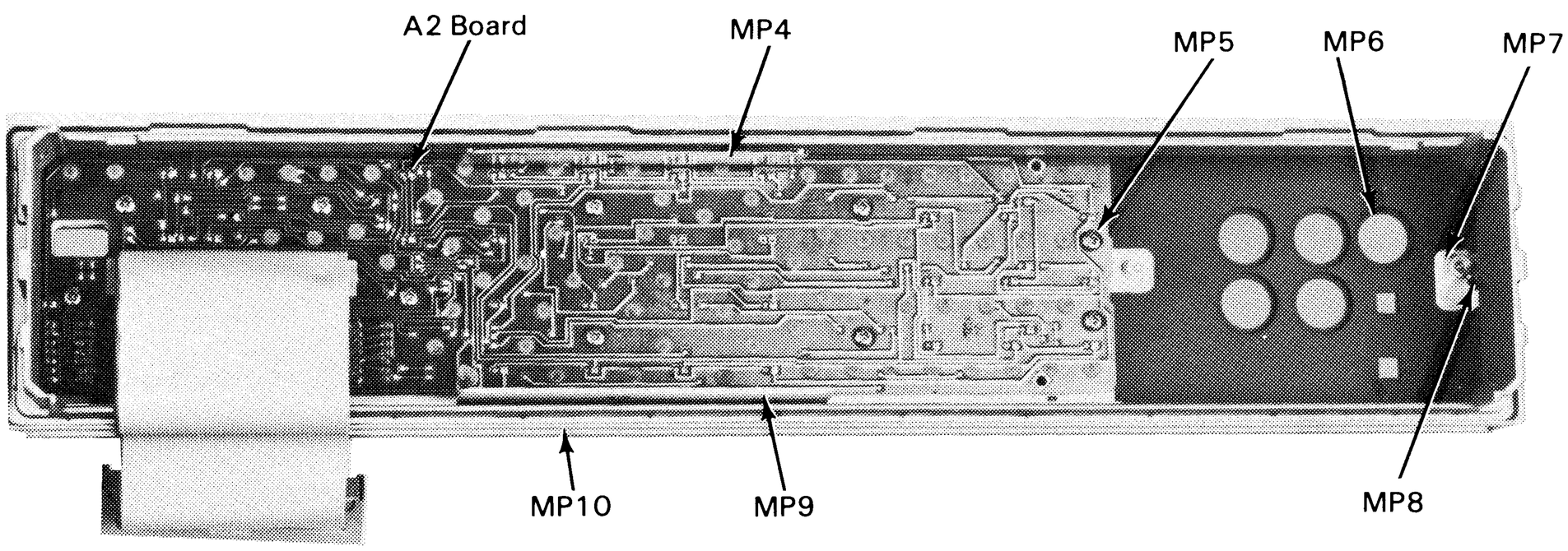

B. Front Frame, Cal. Panel, Sub Panel, and A2 Board Assembly.

Reference Designation	-hp- Part Number	C D	Qty	Description
MP1	03456-00201	5	1	Front Panel
MP2	4040-1645	1	33	Light-Pipes
MP3	4114-0868	5	1	Window—Display
MP4	03456-00204	8	1	Sub-Panel
MP5	0515-0211		10	Screw-Mach M3 x 0.5 6MM-LG Pan-HD
MP6	03456-00202	6	1	Panel-Calibrate
MP7	03456-01203	9	1	Bracket-Panel Mount
MP8	2510-0133		1	Screw-Mach 8-32 x .188 Pan HD
MP9	03456-01204	0	1	Bracket, Sub Panel
MP10	5020-8801	4	1	Front Frame

Figure 6-7. Front Assembly (Inside View).

NOTE

The MP Designations used on this page apply only to those parts called out in Figure 6-8 (A & B).

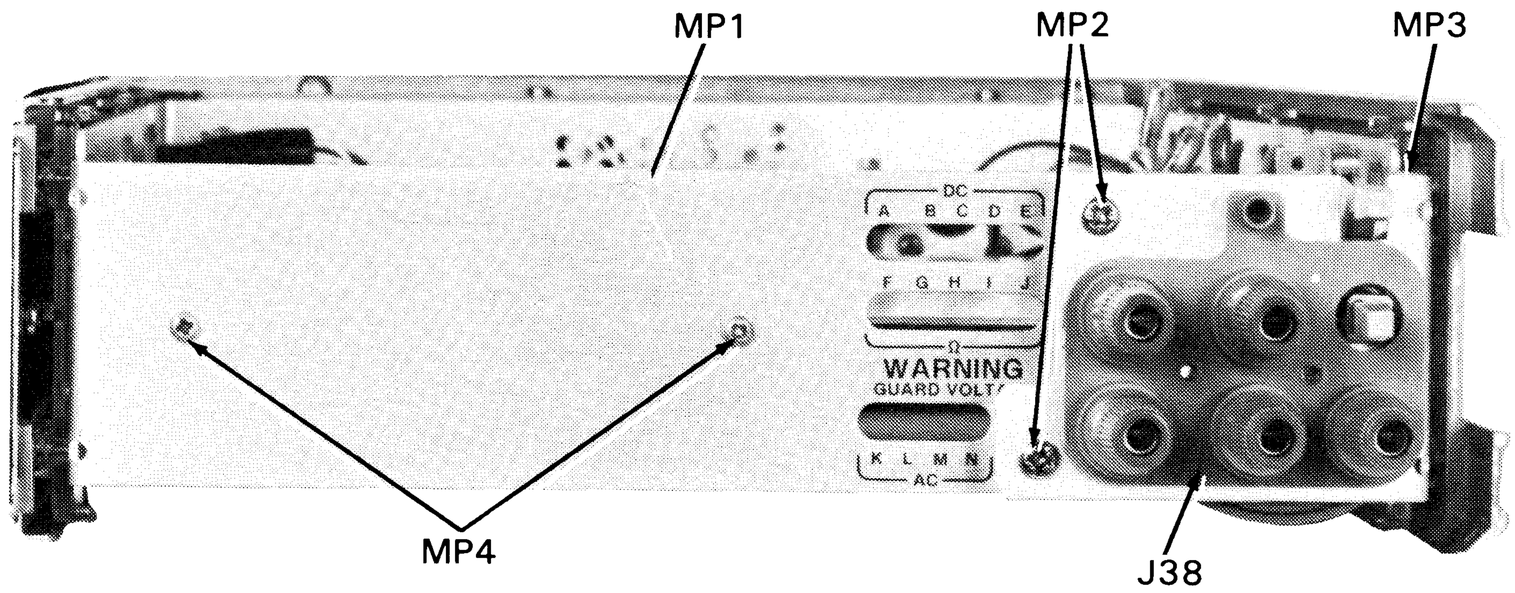

A. Inguard Chassis Hardware—Front.

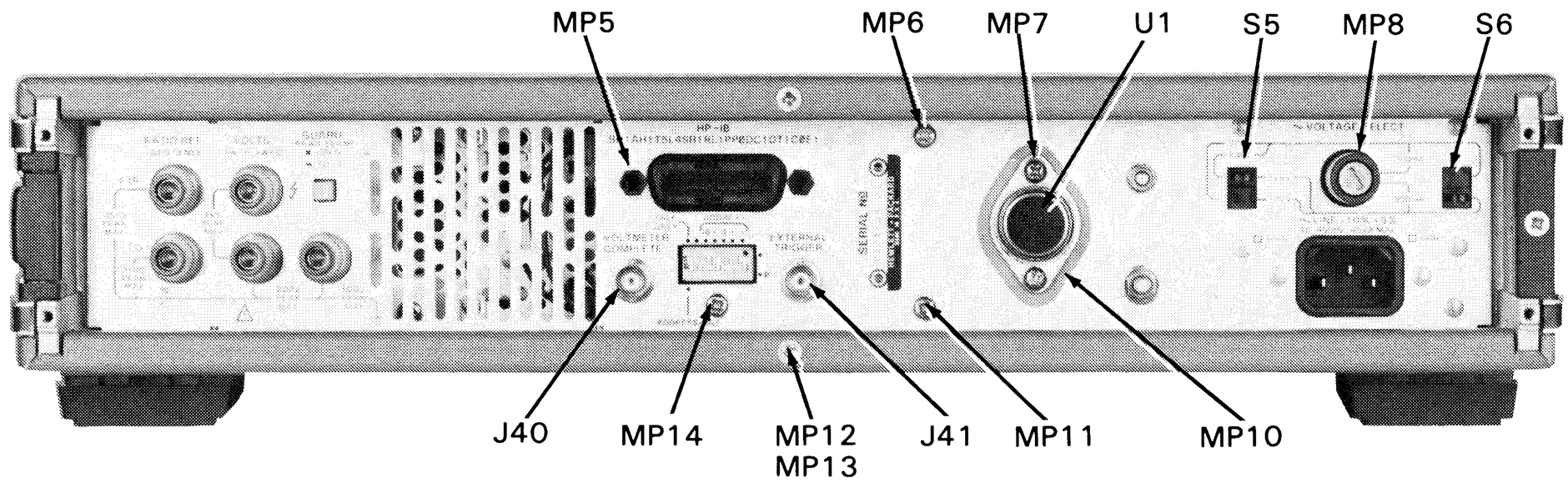

B. Rear Panel.

Reference Designation	-hp- Part Number	C D	Qty	Description
MP1	03456-00102	5	1	Chassis-Inguard-Left
MP2	0515-0212	9	2	Screw-Mach M3.5 x 0.6 6MM-LG Pan-HD
MP3	03456-00101	4	1	Chassis-Inguard-Right
MP4	0624-0314	3	2	Screw-Tapping 4-20 x .375 Pan-HD Plastite
MP5	0380-1214	6	2	Standoff Screw-HP-IB, Metric
MP6	0515-0225	4	1	Screw-Mach M3.5 x 0.6 10MM-LG Pan-HD
MP7 Δ_{10}	0624-0034	4	2	Screw-Taping 6-20 0.5 Pan-HD
MP8 Δ_{10}	2110-0564	8	1	Fuseholder Body
MP9 Δ_{10}	2110-0565	9	1	Fuseholder Cap
MP10 Δ_{10}	0340-0580	3	1	Insulator-XSTR THRM-CNDCT
MP11 Δ_{10}	0515-0212	9	1	Screw-Mach M3.5 x 0.6 6MM-LG Pan-HD
MP12 Δ_{10}	0570-1171	7	3	Screw-Cover Mtg.
MP13 Δ_{10}	0510-0043	4	3	Ring-Ret Ext-E-.141 Dia
MP14 Δ_{10}	0515-0215	2	1	Screw M3.5 x 0.6 20MM-LG Pan-HD
J38	5060-7478	3	1	Terminal Assembly-Front Input
J40, J41	1250-0083	1	2	Connector-RF BNC
S5, S6	3101-2298	1	2	Switch-Slide Voltage Select
U1 Δ_{10}	1826-0181	1	1	Voltage Regulator-LM323K

Figure 6-8. Inguard Chassis—Front and Rear Panel.

NOTE

The MP Designations used on this page apply only to those parts called out in Figure 6-9 (A & B).

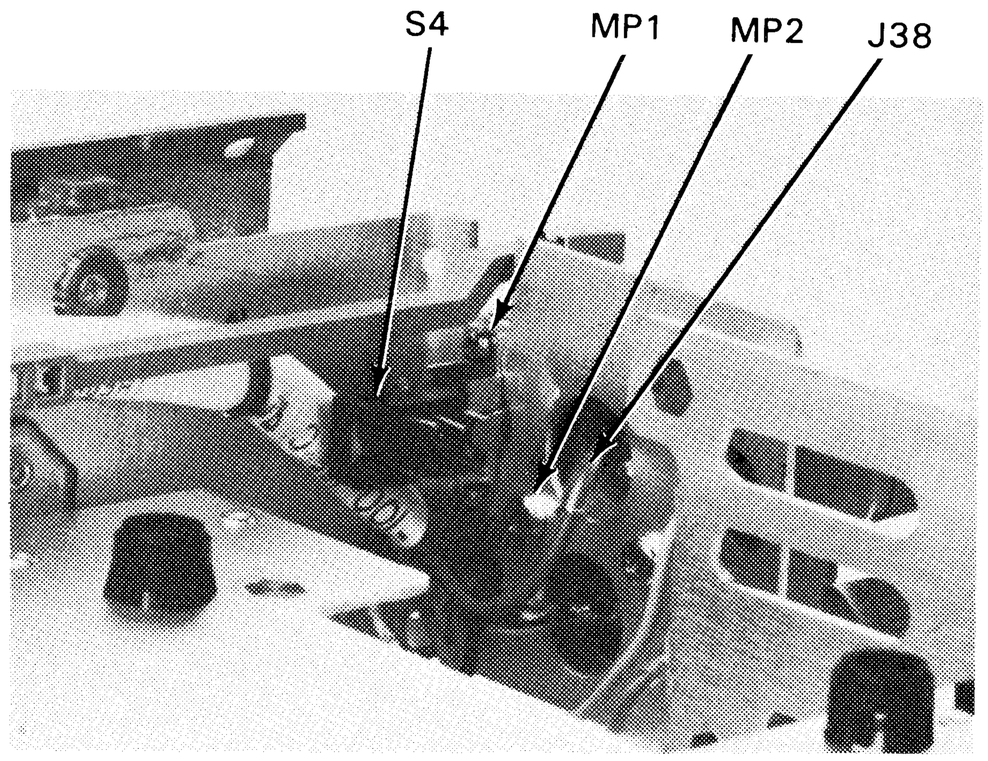

A. Inside View of Front Terminal Assembly and Guard Switch.

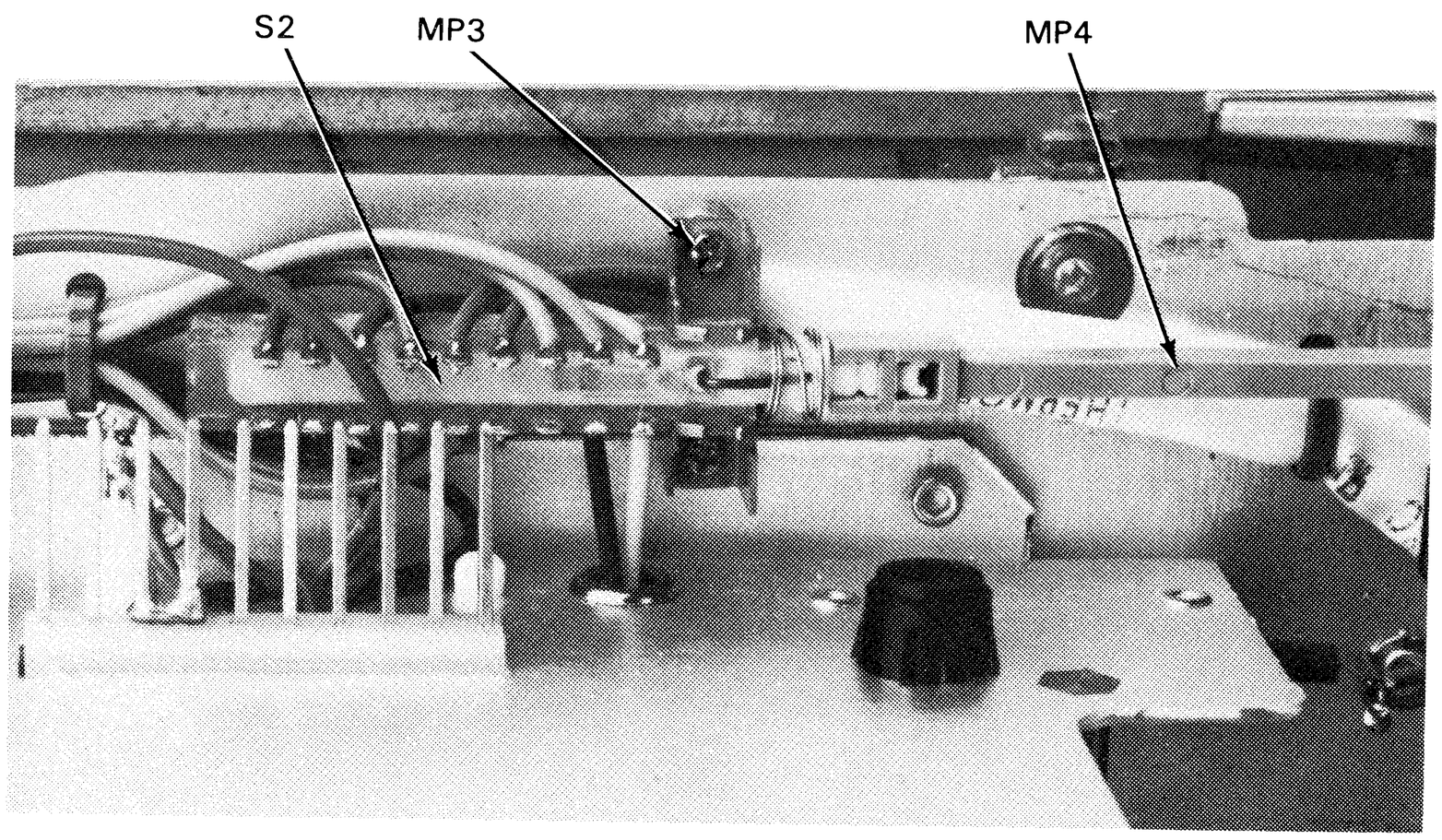

B. Front/Rear Switch (F/R).

Reference Designation	-hp- Part Number	C D	Qty	Description
MP1	0515-0214		2	Screw-Mach M2 x 0.4 6MM-LG Pan-HD
MP2	0515-0211	8	2	Screw-Mach M3 x 0.5 6MM-LG Pan-HD
MP3	0515-0214		2	Screw-Mach M2 x 0.4 6MM-LG Pan-HD
MP4	5040-7023	2	1	Pushrod for S2
J38	5060-7478	3	1	Terminal Assembly-Front Input
S2	3101-0461	6	1	Switch-Front/Rear-PB 6PDT
S4	3101-1299	0	1	Switch-Guard-PB DPDT

Figure 6-9. Inside View of Front Terminal Assembly, Guard Switch, and Front/Rear Switch.

NOTE

The MP Designations used on this page apply to those parts called out in Figure 6-10 (A & B).

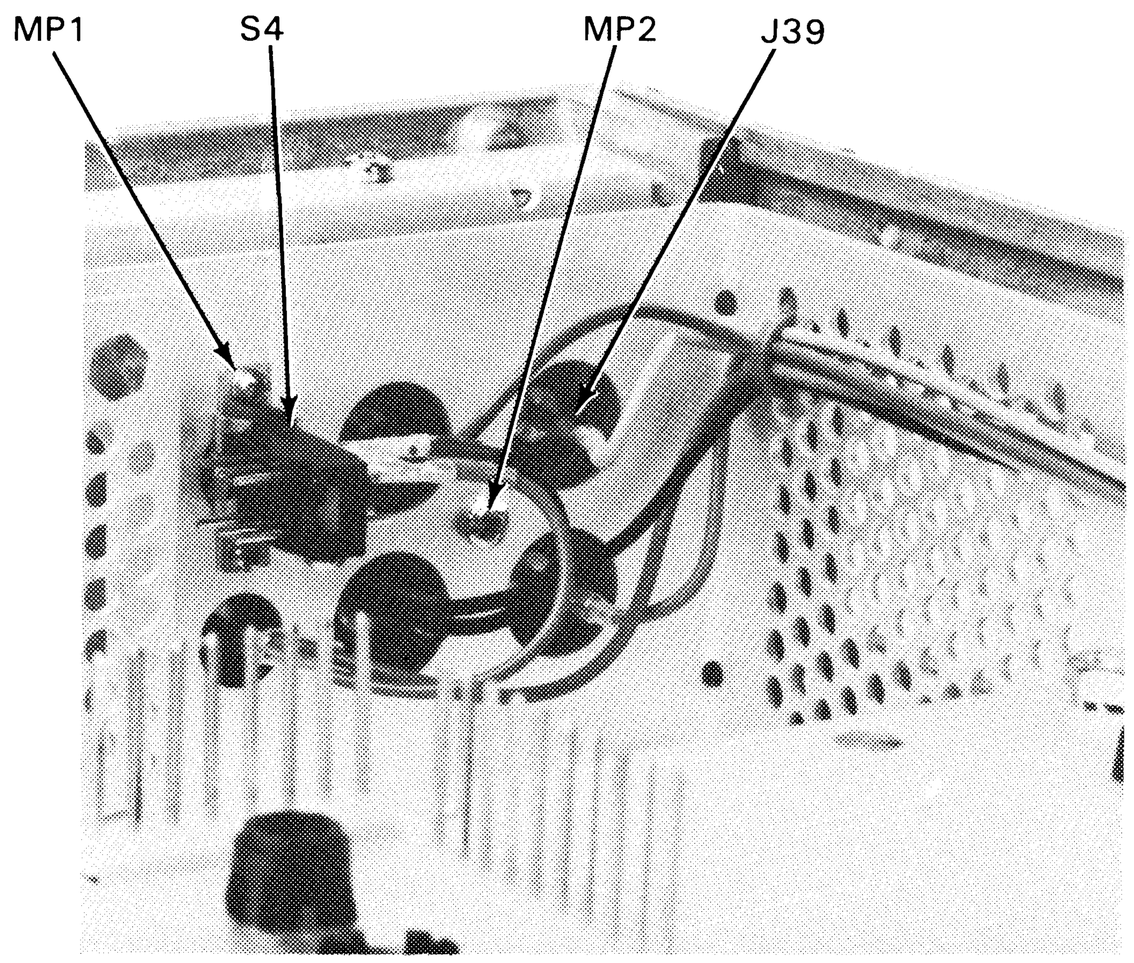

A. Inside View of Rear Terminal Assembly and Guard Switch.

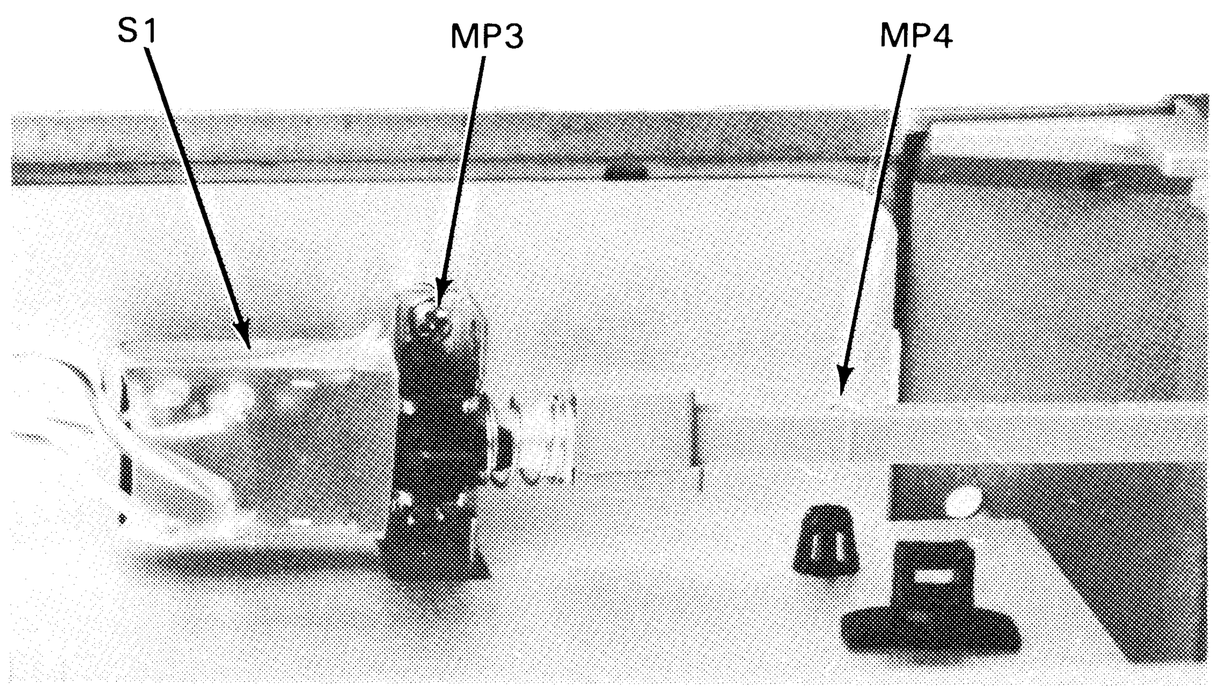

B. AC Power Switch.

Reference Description	-hp- Part Number	C D	Qty	Description
MP1	0515-0214		2	Screw, Mach M2 x 0.4 6MM-LG Pan-HD
MP2	0515-0211	8	2	Screw, Mach M3 x 0.5 6MM-LG Pan-HD
MP3	0515-0217		2	Screw, Mach M2 x 0.4 4MM-LG Pan-Hd
MP4	5040-7023	2	1	Pushrod for S1
J39	5060-7478	3	1	Terminal Assembly-Rear Input
S1	3101-2216	3	1	Switch-PB DPDT ALTNG 4A 250 VAC
S4	3101-1299	0	1	Switch-Guard PB DPDT

Figure 6-10. Inside View of Rear Terminal Assembly and AC Power Switch.

NOTE

The MP Designations used on this page apply only to those parts called out in Figure 6-11.

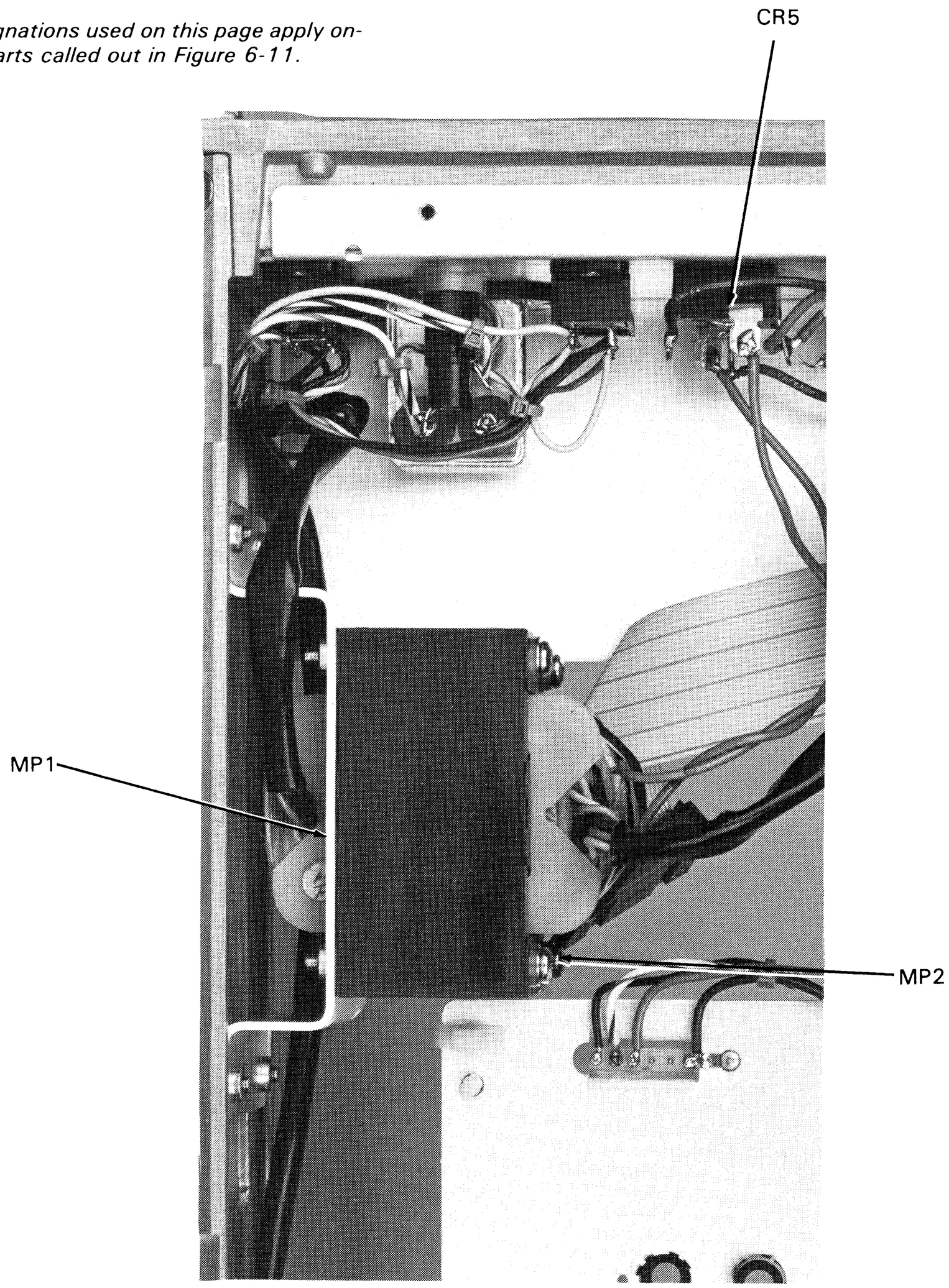

Reference Designation	-hp- Part Number	C D	Qty	Description
MP1	03456-01201	7	1	Bracket-Transformer
MP2	0515-0216	3	4	Screw-Mach M4 x 0.7 50MM-LG Pan-HD
CR5 Δ_{10}	1906-0205	0	1	Diode Assembly Bridge

Figure 6-11. Power Transformer and Bracket; Voltage Regulator, Zener Diode, and Bracket.

SECTION VII
MANUAL CHANGES

7-1. INTRODUCTION

7-2. This section of the manual has information to adapt this manual for instruments with serial number prefixes other than shown on the title page. In addition, changes to instruments with the serial prefix given on the title page may also be included in this section.

7-3. MANUAL CHANGES

7-4. To adapt this manual to your 3456A, refer to Table 7-1 and make all the manual changes listed opposite your instrument's serial number. Perform these changes in the sequence listed.

7-5. If your instrument serial number is not listed on the title page of this manual or in Table 7-1, it may be documented in a yellow MANUAL CHANGES supplement.

Table 7-1. Manual Changes

Instrument Serial Number	Make Manual Changes
2015A00260 and Below	1
2015A00379 and Below	1,2
2015A00529 and Below	1,2,3
2015A00950 and Below	1,2,3,4
2015A01865 and Below	1,2,3,4,5
2015A02160 and Below	1,2,3,4,5,6
2015A01866 thru 2015A2905	7
2015A02970 and Below	1,2,3,4,5,6,8
2015A03070 and Below	1,2,3,4,5,6,8,9
2015A04595 and Below	1,2,3,4,5,6,8,9,10,11
2201A04596 thru 2201A4795	11

7-6. MANUAL CHANGE INSTRUCTIONS

7-7. Change #1

7-8. For serial numbers 2015A00260 and below.

a. Page 8-83/8-84, Figure 8-70 (Schematic 9, Main Controller Schematic). Delete inverters A4U16b and U16c, as shown in Figure 7-1. Since part of U16 is also used in other circuits, only delete U16b and U16c.

b. Page 6-7, Table 6-4 (Replaceable Parts). Change A4U18 from 1820-0693 to the following:

Ref. Des.	Part Number	C D	Description
A4U18	1820-1112	8	IC SN74LS74AN

7-9. Change #2

7-10. For serial numbers 2015A00379 and below.

a. Page 8-71/8-72, Figure 8-64 (Schematic 4, A/D Converter Schematic). Resistors A20R424 and R427 where origionally 56.2K ohms, and R425 and R426 where 44.2K ohms. They where changed to 52.3K ohms and 47.5K ohms for R424 and R427, and R425 and R426, respectively. They where changed to improve the A/D Converter's Overload Circuitry operation when the 3456A's is configured to the 50Hz power option. If the resistor values are other than shown on schematic 4, change them to the values shown on the schematic (52.3K for R424 and R427, and 47.5K for R425 and R426).

b. Page 6-11, Table 6-4 (Replaceable Parts). The values for A20R424 through R427 should be as shown Table 6-4, if the 3456A is updated to those values.

7-11. Change #3

7-12. For serial numbers 2015A00529 and below.

a. Page 8-79/8-80, Figure 8-68 (Schematic 7, AC Converter Schematic). Change capacitors A40C17 and C18 from 10pF to 15pF.

b. Page 6-15, Table 6-4 (Replaceable Parts).

Ref. Des.	Part Number	C D	Description
A40C17,C18	0140-0202	2	CAPACITOR-FXD 15pF 500VDC

c. Page 8-81/8-82, Figure 8-69 (Schematic 8, Inguard Logic Schematic). Change the following:

1. Delete A30U25a from the schematic, as shown in Figure 7-2.

2. Connect a .0047μF capacitor (A30C12) from pin 1 of A30U11 to ground, as shown in Figure 7-2.

d. Page 6-13/6-14, Table 6-4 (Replaceable Parts). Delete A30U25 from the table and add the following:

Ref. Des.	Part Number	C D	Description
A30C12	0160-4298	6	CAPACITOR .0047μF

e. Page 8-83/8-84, Figure 8-70 (Schematic 9, Main Controller Schematic). Change Address Line A10 connection as shown in Figure 7-3.

7-13. Change #4

7-14. For serial numbers 2015A00950 and below. Use new part number (1855-0460) shown in Table 6-4, when replacing A20Q406. The old number is: 1855-0246.

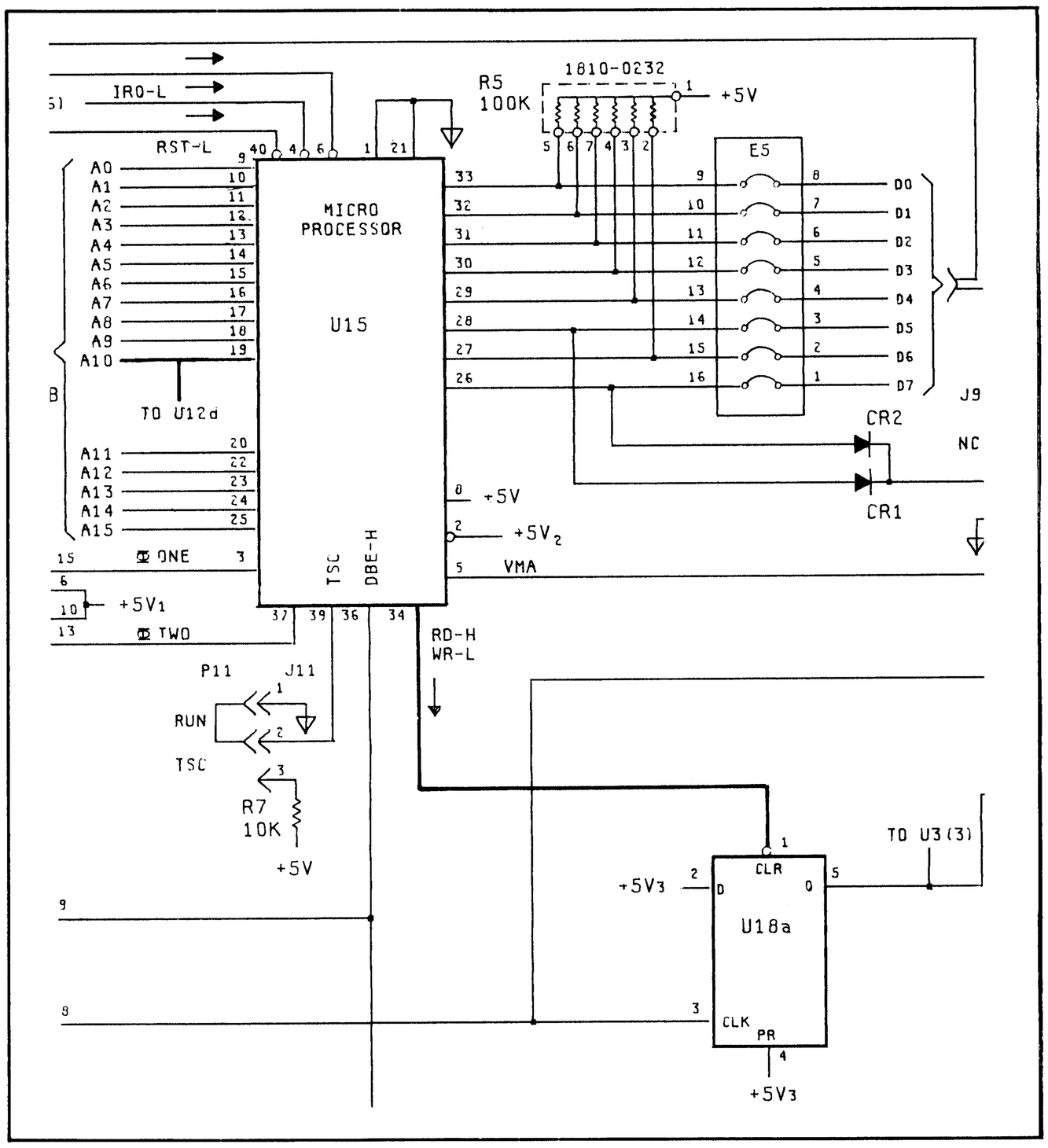

Figure 7-1. Change #1 on Schematic 9

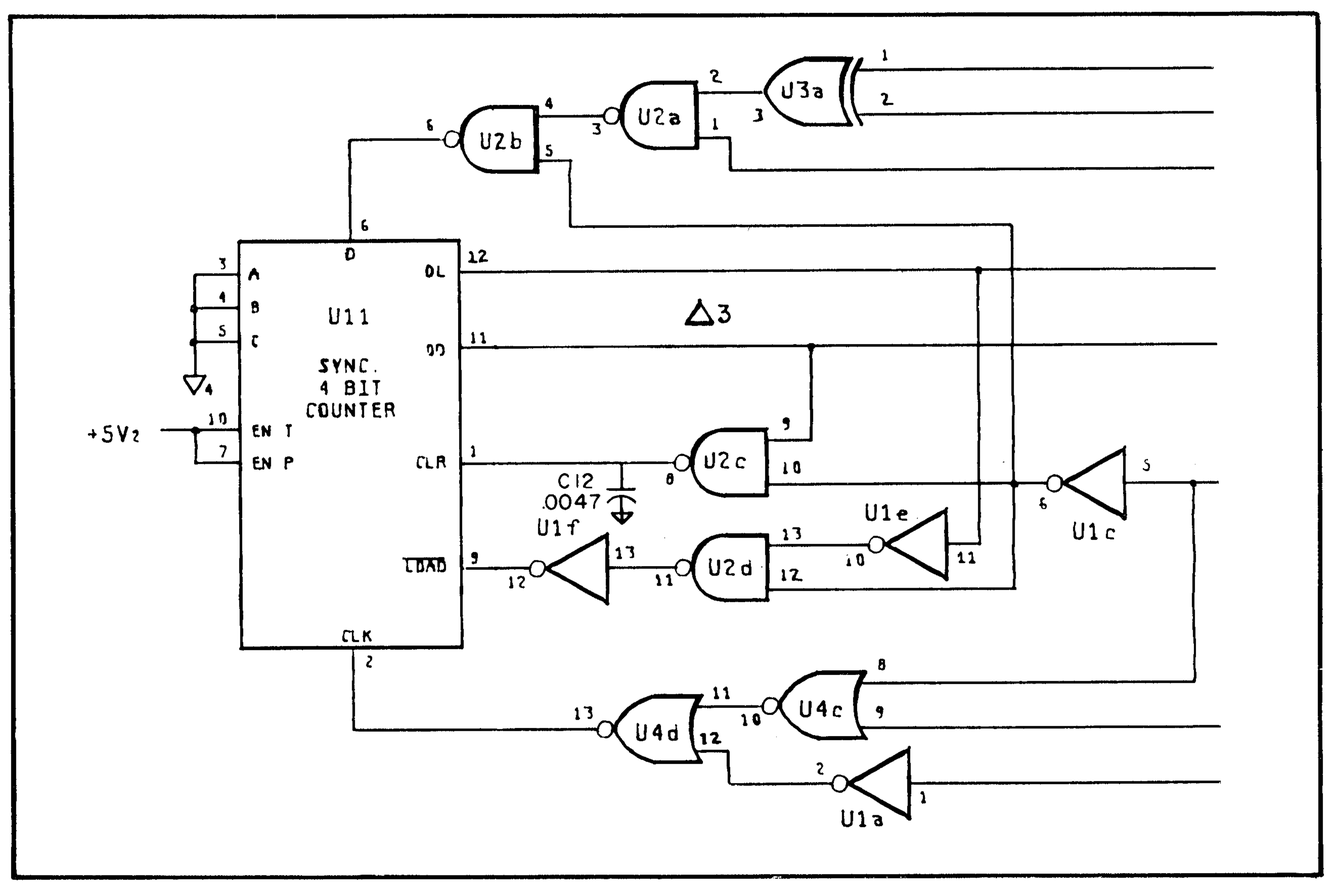

Figure 7-2. Change #3 on Schematic 8

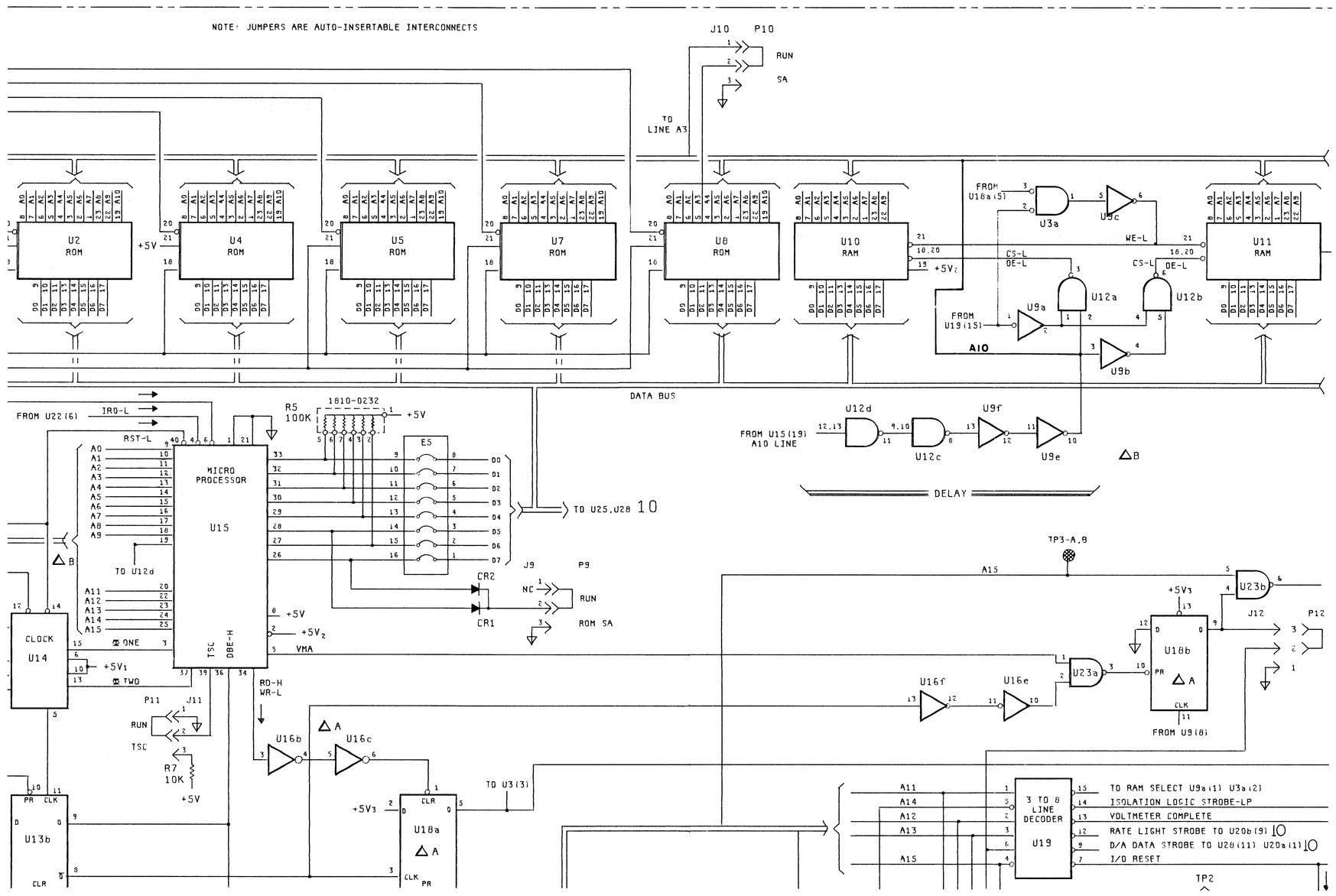

Figure 7-3. Change #3 on Schematic 9
Rev B 7-3

7-15. Change #5

7-16. For serial numbers 2015A01865 and below. All changes pertain to the A40 Assembly.

a. Page 8-79/8-80, Figure 8-68 (Schematic 7, AC Converter Schematic). Do the following:

1. Add C11 (a 0.3pF capacitor) to the schematic, as shown in Figure 7-4. Do not add the capacitor if missing from the A40 assembly or hybrid U3 has been replaced.

2. Change C3 from 62pF to 75pF. Do not change the capacitor if C11 is missing from the A40 assembly or hybrid U3 has been replaced.

3. Change C22 from .015μF to .018μF. Do not change the capacitor if C11 is missing from the A40 assembly or hybrid U3 has been replaced.

4. Change R21 from 9.09K ohms to 6.98K ohms. Do not change the resistor if C11 is missing from the A40 assembly or hybrid U3 has been replaced.

5. Change R24 from 4.99K ohms to 3.16K ohms. Do not change the resistor if C11 is missing from the A40 assembly or hybrid U3 has been replaced.

6. Change R60 from 232 ohms to 301 ohms. Do not change the resistor if C11 is missing from the A40 assembly or hybrid U3 has been replaced.

b. Page 6-14/6-15/6-16, Table 6-4 (Replaceable Parts). Do not make the following changes or additions if capacitor C11 is missing from the A40 assembly or hybrid U3 has been replaced.

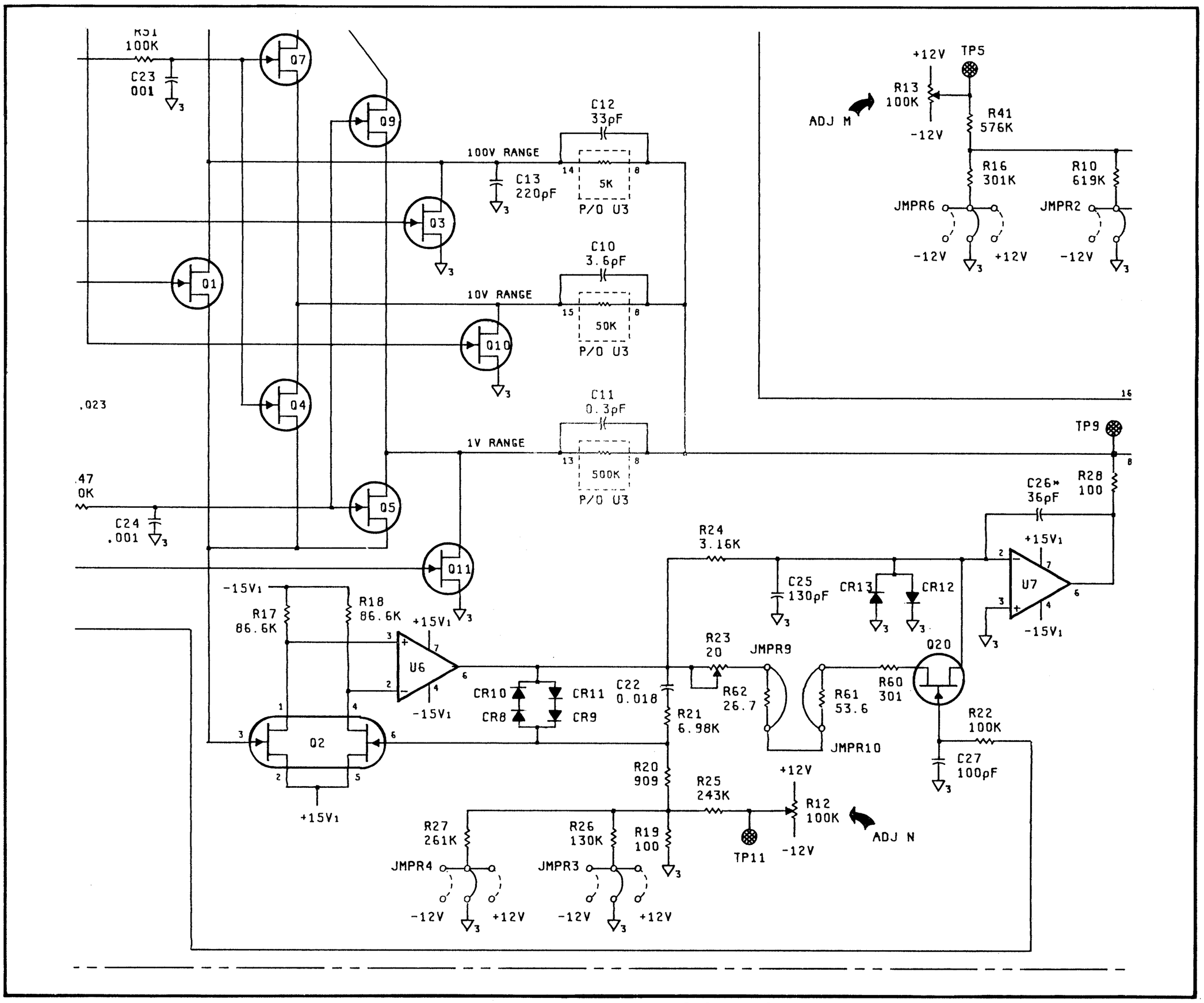

Figure 7-4. Change #5 on Schematic 7

Ref. Des.	Part Number	C D	Description
A40C3	0160-2202	8	CAPACITOR-FXD 75pF 300V
A40C11	0160-3502	3	CAPACITOR-FXD .3pF 500VDC
A40C12	0160-4807	5	CAPACITOR-FXD 33pF 300VDC
A40C22	0160-0302	5	CAPACITOR-FXD .018μF 200VDC
A40R21	0698-4470	5	RESISTOR 6.98K 1% .125W
A40R24	0757-0279	0	RESISTOR 3.16K 1% .125W
A40R60	0757-3486	2	RESISTOR 301 1% .125W

7-17. Change #6

7-18. For serial numbers 2015A02160 and below.

a. Page 8-65/8-66, Figure 8-61 (Schematic 1, Input Switching Schematic). Change A20C111 from 100pF to 150pF. Do not change the capacitor if U106 has been replaced by an op amp with part number 1820-0478.

b. Page 6-8/6-12, Table 6-4 (Replaceable Parts). When replacing A20U106, replace with the part number (1820-0478) shown in Table 6-4. The old part number is 1820-0477. If U106 has been replaced, replace C111 with the part number (0160-3336) shown in Table 6-4. The old part number is 0160-4814.

c. Page 6-8, Table 6-4 (Replaceable Parts). When replacing A20C701, replace with the part number (0180-0269) shown in Table 6-4. The old part number is 0180-0230.

7-19. Change #7

7-20. For serial numbers between 2015A01866 and 2015A02905.

a. Page 8-79/8-80, Figure 8-68 (Schematic 7, AC Converter Schematic. Change A40R21 from 6.98K ohm to 9.09K ohm.

b. Page 6-16, Table 6-4 (Replaceable Parts). Change A40R21 to 9.09K ohms (Part Number 0757-0288). If the resistor is to be replaced, use the value and part number shown in Table 6-4 (6.98K ohms, Part Number 0689-4470).

7-21. Change #8

7-22. For serial numbers 2015A02970 and below.

a. Page 8-79/8-80, Figure 8-68 (Schematic 7, AC Converter Schematic). Change the Input Attenuator Circuitry of the AC Converter as shown in Figure 7-5. Note that in the change, the value of R3 is 51 ohms instead of 1K ohms.

b. Page 6-15, Table 6-4 (Replaceable Parts). Change the following:

Ref. Des.	Part Number	C D	Description
A40R3	0683-5105	4	RESISTOR 51 5% .25W

7-23. Change #9

7-24. For serial numbers 2015A03070 and below. The following is a ROM change and requires some changes of the signatures listed in Service Group A of the manual. If a ROM (A4U5, U7, or U8) is to be replaced in the 3456A because of a failure, make sure the new ROMs used as replacements are the ones listed in Table 6-4 (Part Number of U5 is 1818-1629, U7 is 1818-1630, and U8 is 1818-1631). In addition, all ROMs (U5, U7, and U8) need to be replaced, even though only one ROM may be defective. If the ROMs presently in the instrument are the new ROMs, then only the defective ROM need to be replaced. The old ROMs listed in step a (which follows this paragraph), are no longer available.

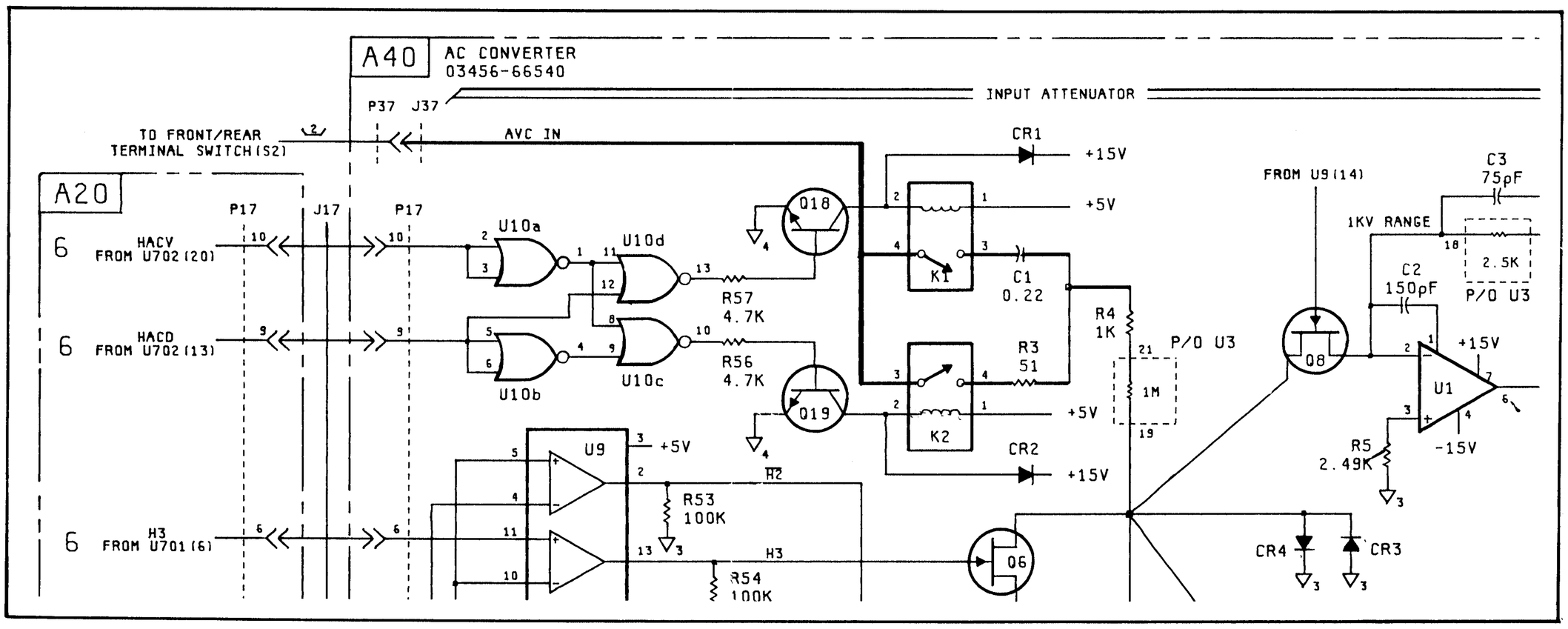

Figure 7-5. Change #8 on Schematic 7

a. Page 6-6, Table 6-4 (Replaceable Parts). The changes are as follows:

Ref. Des.	Part Number	C D	Description
A4U5	1818-1367	0	IC MEMORY, ROM
A4U7	1818-1368	1	IC MEMORY, ROM
A4U8	1818-1369	2	IC MEMORY, ROM

b. Page 8-A-3/8-A-4, Table 8-A-1 (Data Bus [D0-D7] Signatures, Service Group A). Replace Table 8-A-1 with Table 7-2.

NOTE

Make sure the ROMs in the 3456A agree with ones listed in Table 6-4. Update the table only if the ROMs are different from the ones that are listed.

Table 7-2. Data Bus (D0-D7) Signatures

Data Bus	A4P5 Pin #	Signature
D0	7	2AP3
D1	8	FH1U
D2	9	FFP5
D3	10	C09F
D4	11	P505
D5	12	HH8A
D6	13	7967
D7	14	A089

Note. Set the Signature Analyzer to:

Start: ( ) A4TP3-A
Stop: ( ) A4TP3-B
Clock: ( ) A4TP3-C
The "1" (High, +5 V) signature is: 0003.

c. Page 8-A-3/8-A-4, Table 8-A-4 (Individual ROM Signatures, Service Group A). Replace Table 8-A-4 with Table 7-3.

Table 7-3. Individual ROM Signatures

ROM	Start/Stop Connection	ROM Pin #	Signature
A4U5	A4U6 pin 10	9	2P23
		10	4H88
		11	C66C
		13	3931
		14	0654
		15	0F76
		16	3574
		17	441P
A4U7	A4U6 pin 9	9	1A11
		10	9751
		11	3PUH
		13	CA4A
		14	7CA7
		15	480A
		16	11F6

Table 7-3. Individual ROM Signatures

ROM	Start/Stop Connection	ROM Pin #	Signature
		17	878C
A4U8	A4U6 pin 7	9	5632
		10	4631
		11	A8AA
		13	1P22
		14	3A6P
		15	24H5
		16	UUHA
		17	02HA

Note. Set the Signature Analyzer to:

Start: ( ) see Table
Stop: ( ) see Table
Clock: ( ) A4TP3-C
The "1" (High, +5V) signature is: 1180.

d. Page 8-A-16, paragraph 8-A-26 step h. Change the signatures in step h of paragraph 8-A-26 to the following:

h. Turn the 3456A On and check the following signatures. If any signatures are bad, try the recommended integrated circuit(s) in the given order. Replace the one on the left first and then replace the one next to it, if the signature was still bad.

I.C.	Pin #	Signature	Replace
A3U4	11	1180	A3U4
A3U4	10	0000	A3U4,U8
A3U4	12	1180	A3U12,U7,U8,U4
A3U14	15	1180	A3U14
A3U12	3	2P23	A3U12
A3U12	5	4H88	A3U12
A3U12	11	C66C	A3U12
A3U12	14	3931	A3U12,U14
A3U12	13	3931	A3U12
A3U7	3	0654	A3U7
A3U7	5	0F76	A3U7
A3U7	11	3574	A3U7
A3U7	14	441P	A3U7,U8
A3U7	13	441P	A3U7
A3U8	3	441P	A3U8
A3U14	13	3931	A3U14

e. Page 8-A-16, paragraph 8-A-26 step j. Change the signatures in step j of paragraph 8-A-26 to the following:

j. Check the following signatures and if any are bad, replace the recommended Integrated Circuit in the given order:

I.C.	Pin #	Signature	Replace
A3U8	5	U280	A3U8,U14
A3U8	11	0F76	A3U8,U14
A3U8	13	6P07	A3U8,U14
A3U8	6	U280	A3U8

I.C.	Pin #	Signature	Replace
A3U8	10	0F76	A3U8
A3U8	14	3501	A3U8
A3U14	2	FF8A	A3U14
A3U14	6	421U	A3U14
A3U14	10	3501	A3U14

f. Page 8-A-16, paragraph 8-A-26 step m. Change the signatures in step m of paragraph 8-A-26 to the following:

m. Check the following signatures and if any are bad, replace the recommended Integrated Circuit in the given order:

I.C.	Pin #	Signature	Replace
A3U4	10	1180	A3U4,U8
A3U4	12	0000	A3U12,U7,U8,U4
A3U8	15	1180	A3U8
A3U8	5	2P23	A3U8
A3U8	11	4H88	A3U8
A3U8	13	C66C	A3U8
A3U14	13	3931	A3U14

g. Page 8-A-16, paragraph 8-A-26 step o. Change the signatures in step o of paragraph 8-A-26 to the following:

o. Check the following signatures and if any are bad, replace the recommended Integrated Circuit in the give order:

I.C.	Pin #	Signature	Replace
A3U12	3	2P23	A3U12,U7
A3U12	5	1180	A3U12,U7
A3U12	11	C66C	A3U12,U7
A3U12	13	3931	A3U12,U7,U8
A3U12	2	2P23	A3U12
A3U12	6	1180	A3U12
A3U12	10	C66C	A3U12
A3U12	14	3931	A3U12
A3U7	2	2P23	A3U7
A3U7	6	4H88	A3U7
A3U7	10	C66C	A3U7
A3U7	14	3931	A3U7
A3U8	2	3931	A3U8

7-25. Change #10

7-26. For serial numbers 2015A04595 and below. This change applies to 3456A which did not have their Fan (B1) removed. If the Fan is defective and needs to be replaced, retrofit the 3456A to a fanless instrument. Refer to Service Note 3456A-12 on how to retrofit the instrument. Because no fans will be replaced, if defective, the information given here should only be used to to adapt this manual for instruments which still have their fans. If the instrument is retrofitted (i.e., the fan is removed), ignore this change and use the information which is presently in this manual.

a. Page 3-3, Figure 3-1 (Front and Rear Panel Features (Cont'd)). Replace Figure 3-1 with Figure 7-6.

b. Page 8-93/8-94, Figure 8-75 (Schematic 14, Power Supply Schematic). Change bridge rectifier A3CR5 to diode rectifiers A3CR5 through A3CR8, as shown in Figure 7-6. Add fan B1, and change fuse F1 to 750MA and 375MA, as shown in Figure 7-7.

c. Page 6-5, Table 6-4 (Replaceable Parts). Change and add the following:

Ref. Des.	Part Number	C D	Description
A3CR5	1901-0662	3	DIODE-PWR RECT 100V 6A
A3CR6	1901-0662	3	DIODE-PWR RECT 100V 6A
A3CR7	1901-0662	3	DIODE-PWR RECT 100V 6A
A3CR8	1901-0662	3	DIODE-PWR RECT 100V 6A

d. Page 6-7, Table 6-4 (Replaceable Parts). Change Heat Sink A10H1 through A10H4 to Part Number: 1205-0462.

e. Page 6-18/6-19, Table 6-4 (Replaceable Parts). Add and change the following:

Ref. Des.	Part Number	C D	Descripton
B1	3140-0604	1	FAN MOTOR
	3160-0307	3	FAN BLADE
	3150-0300	5	FILTER-AIR
F1	2110-0033	6	FUSE .75A 250V 1.25X.25 (FOR 100V/120V OPERATION)
F1	2110-0065	4	FUSE .375A 250V NTD 1.25X.25 UL (FOR 220V/240V OPERATION)
	03456-00103	6	GAUSSET-OUTGUARD
	03456-00104	7	GAUSSET-SHROUD
	03456-00203	7	PANEL-REAR
	03456-00601	9	FAN SHIELD-TOP
	03456-00602	0	FAN SHIELD-BOTTOM
	03456-01202	8	BRACKET-REGULATOR
	03456-04102	3	SHIELD-OUTGUARD
	5040-8304	4	SHROUD-FAN
	5060-9835	0	TOP COVER
	5060-9852	1	SIDE COVER-NO HANDLE

f. Page 6-18/6-19, Table 6-4 (Replaceable Parts). Delete bridge rectifier CR5 (Part Number: 1906-0205) from the table.

g. Page 6-20, Figure 6-1 (Chassis/Cabinet Parts). Change the following in the table located in Figure 6-1.

Ref. Des.	-hp- Part Number	C D	Qty	Description
MP15	5060-9835	0	1	TOP COVER
MP17	5060-9852	1	1	SIDE COVER, NO HANDLE

h. Page 6-22, Figure 6-3 (Top View of Chassis with PC Boards Removed. Replace Figure 6-3 with Figure 7-8.

i. Page 6-23, Figure 6-4 (Bottom View of Chassis with PC Boards Installed). Change the following in the table in Figure 6-4.

Ref. Des.	-hp- Part Number	C D	Qty	Description
MP1	03456-00602	0	1	Fan Shield, Bottom

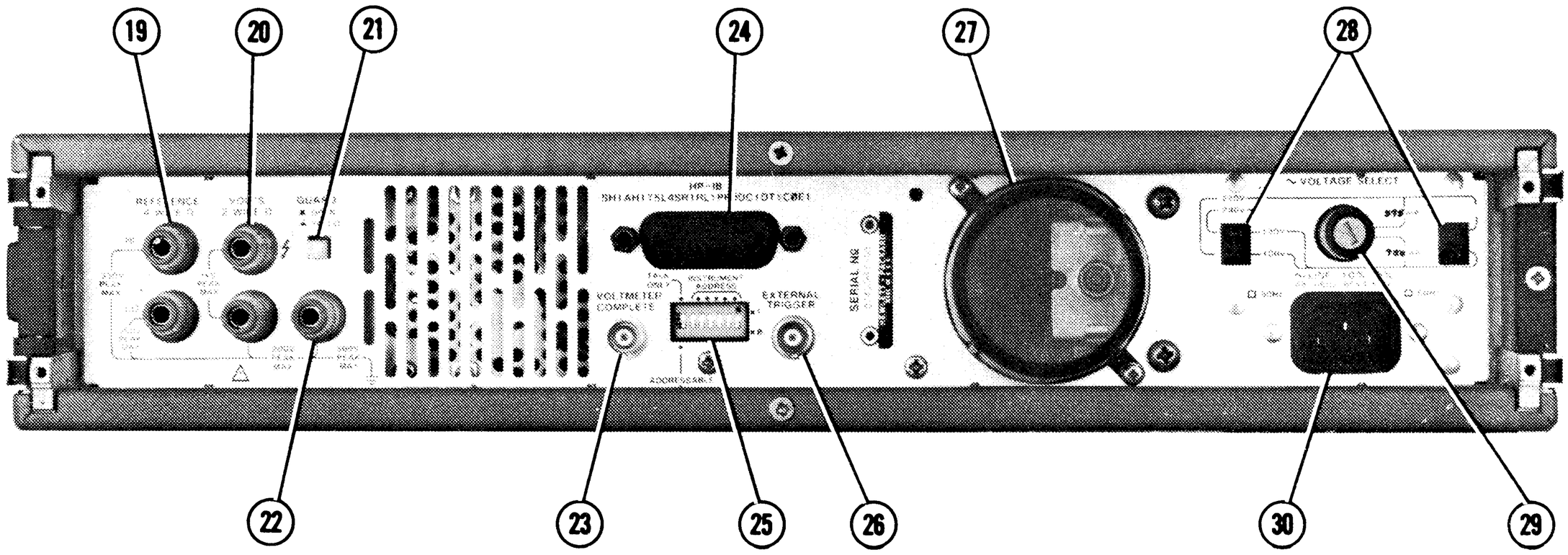

(19) Ratio Ref/4WRΩ Sense Terminals - are used for the Ratio Reference Voltage or 4-Wire Ohms measurement.

(20) Volts/2WRΩ/4WRΩ Terminals - input terminals for the ACV, DCV, ACV+DCV, and 2-Wire Ohms measurements. In addition, the terminals supply the current for a 4-Wire Ohms measurement.

(21) Rear Guard Switch - internally connects the GUARD terminal to the VOLTS LOW terminal.

(22) Rear Guard Terminal.

(23) Voltmeter Complete Connector - Outputs pulse during measurement cycle.

(24) HP-IB Connector used to connect to HP-IB.

(25) HP-IB Address Selection Switch - Sets 3456A HP-IB Address.

(26) External Trigger Input Connector.

(27) Cooling Fan.

(28) Power Line Voltage Selection - Refer to Paragraph 2-8.

(29) Fuse -90 V to 126 V -.75 amp, 198 V to 252 V -.375 amp.

(30) AC Power Connector.

Figure 7-6. Change #10 in Figure 3-1

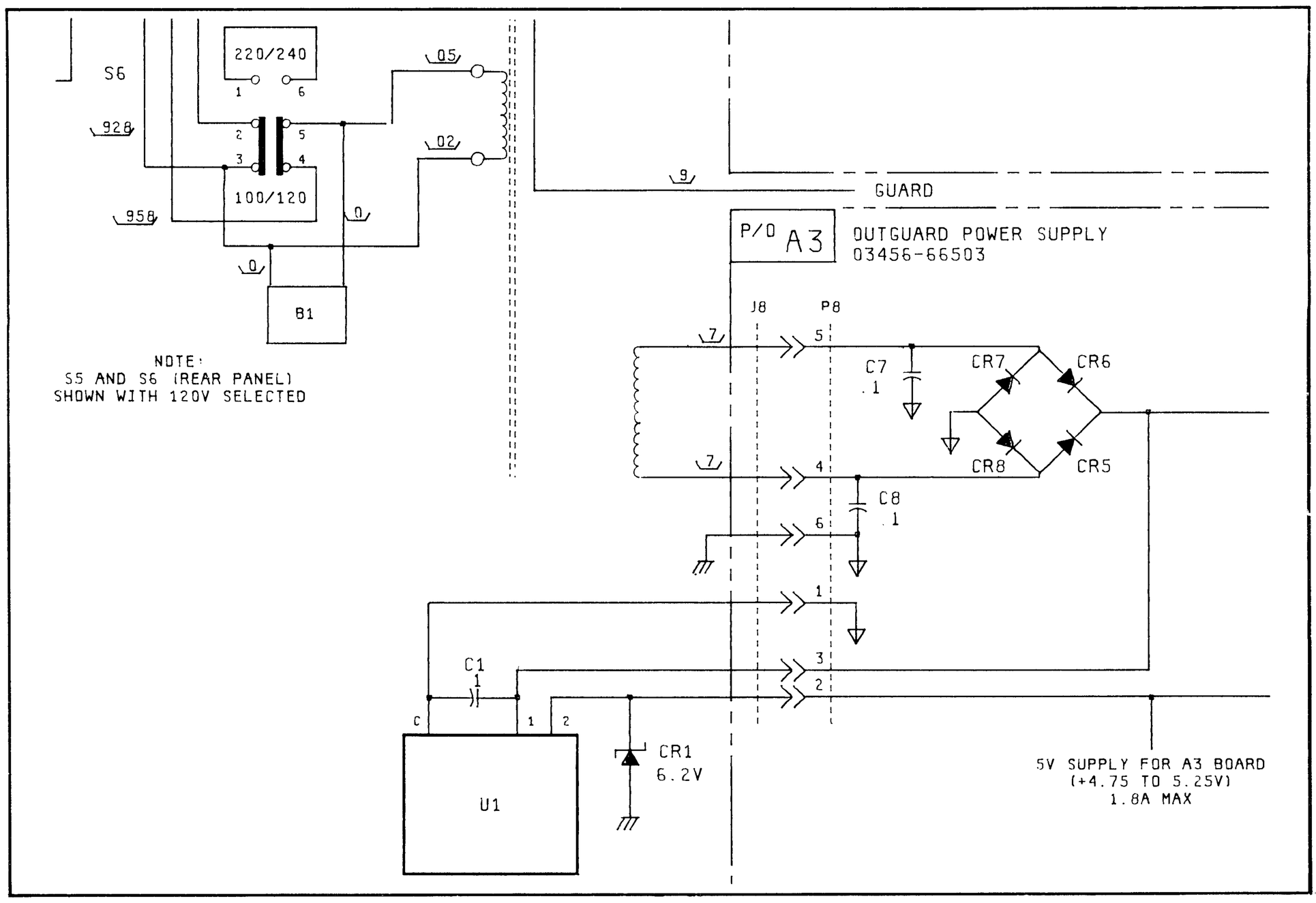

Figure 7-7. Change #10 on Schematic 14

NOTE

The MP Designations used on this page apply only to those parts called out in Figure 6-3.

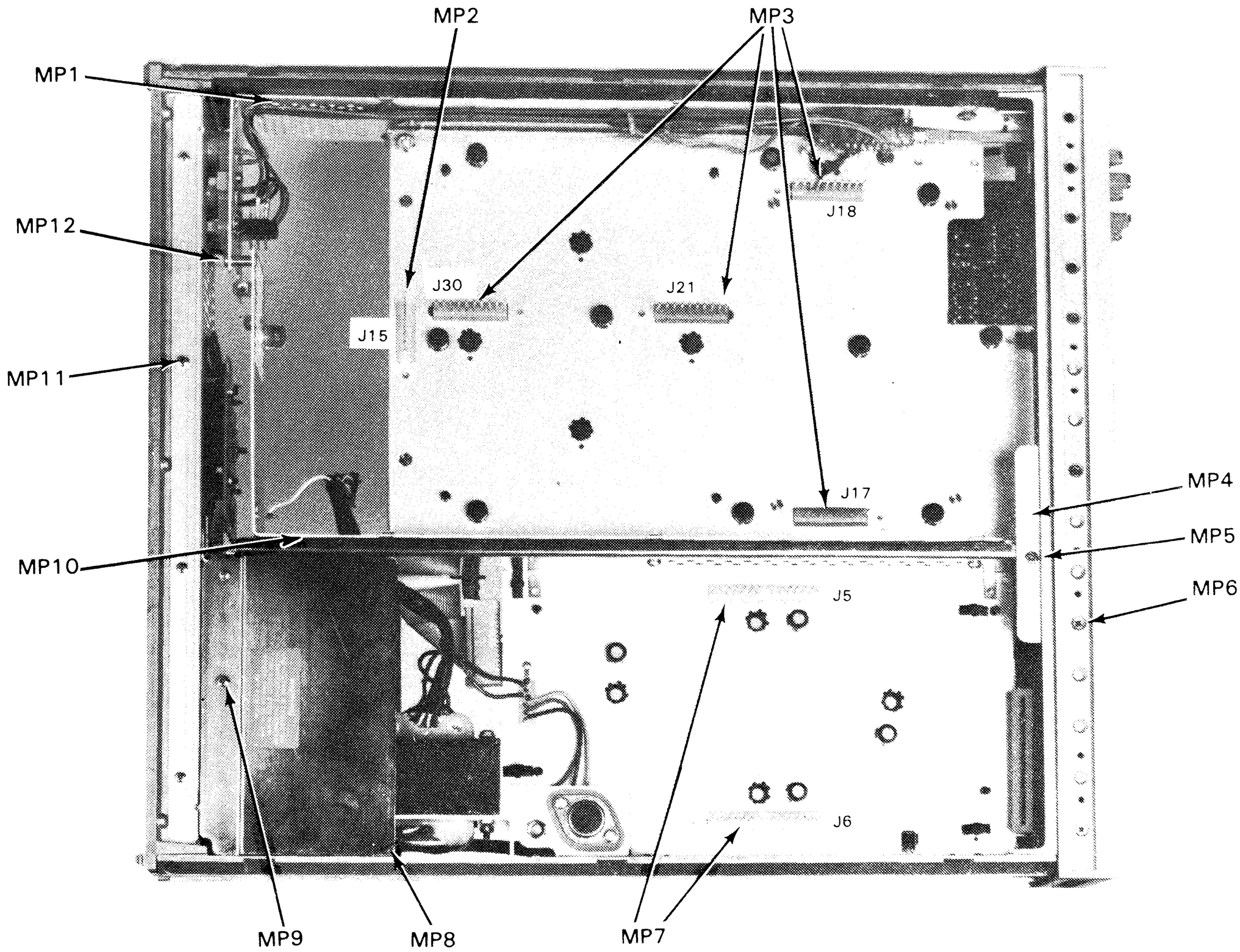

Reference Designation	-hp- Part Number	C D	Qty	Description
MP1	03456-00101	4	1	Chassis-Inguard-Right
MP2	1251-6184	7	1	Connector 8 Pin M Post Type
MP3	1251-6194	9	4	Connector 10 Pin M Post Type
MP4	03456-00204	8	1	Sub-Panel
MP5	0515-0212		1	Screw-Mach M3.5 x 0.6 6 MM-LG Pan-HD
MP6	0515-0219		4	Screw-Mach M3 x 0.5 6MM-LG Flat-HD
MP7	1251-6192	7	2	Connector 15-Pin M Post Type
MP8	03456-00601	9	1	Fan Shield, Top
MP9	0515-0211	8	2	Screw-Mach M3 x 0.5 6MM-LG Pan-HD
MP10	03456-00102	5	1	Chassis-Inguard-Left
MP11	0515-0211	8	4	Screw-Mach M3 x 0.5 6MM-LG Pan-HD
MP12	0515-0212		4	Screw-Mach M3.5 x 0.6 6MM-LG Pan HD

Figure 7-8. Change #10 in Figure 6-3

j. Page 6-27, Figure 6-8 (Inguard Chassis-Front and Rear Panel). Replace Figure 6-8 with Figure 7-9.

k. Page 6-30, Figure 6-11 (Power Transformer and Bracket; ec.). Replace Figure 6-11 with Figure 7-10.

NOTE

The MP Designations used on this page apply only to those parts called out in Figure 6-8 (A & B).

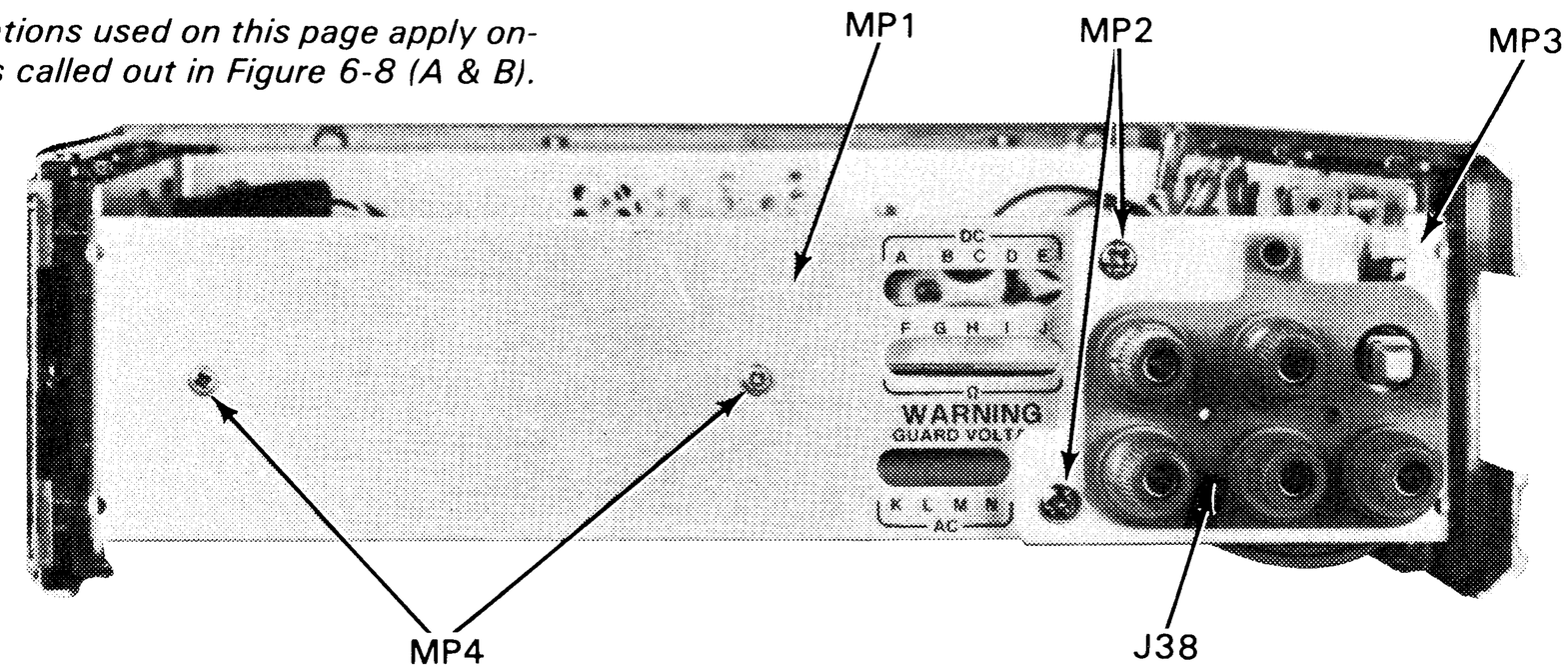

A. Inguard Chassis Hardware—Front.

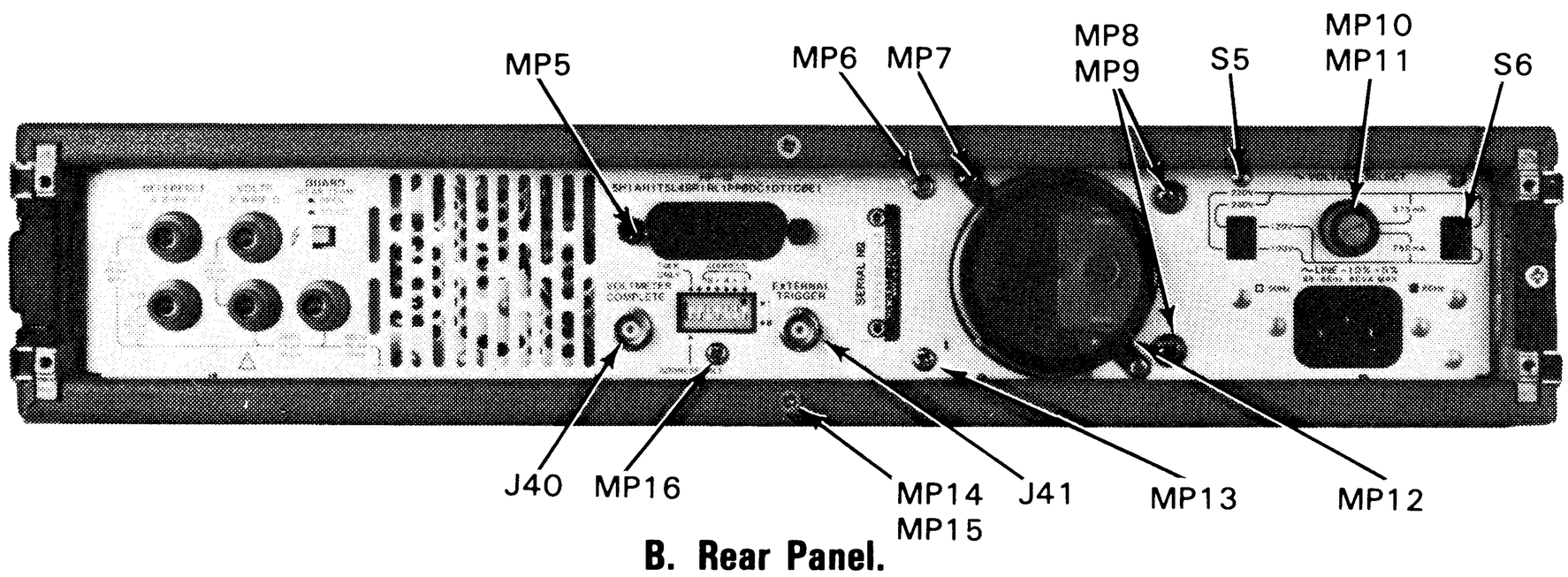

B. Rear Panel.

Reference Designation	-hp- Part Number	C D	Qty	Description
MP1	03456-00102	5	1	Chassis-Inguard-Left
MP2	0515-0212		2	Screw-Mach M3.5 x 0.6 6MM-LG Pan-HD
MP3	03456-00101	4	1	Chassis-Inguard-Right
MP4	0624-0314		2	Screw-Tapping 4-20 x .375 Pan-HD Plastite
MP5	0380-1214		2	Standoff Screw-HPIB, Metric
MP6	0515-0225		1	Screw-Mach M3.5 x 0.6 10MM-LG Pan-HD
MP7	0515-0211	8	2	Screw-Mach M3 x 0.5 6MM-LG Pan-HD
MP8	2680-0265		2	Screw-Mach 10-32 x 1.0 Pan-HD w/Helical Lock
MP9	0380-1208		2	Spacer .194 I.D. x .5 O.D. x .625 Long
MP10	2110-0564	8	1	Fuseholder Body
MP11	2110-0565	9	1	Fuseholder Cap
MP12	3150-0300	5	1	Air Filter
MP13	0515-0212		1	Screw-Mach M3.5 x 0.6 6MM-LG Pan-HD
MP14	0570-1171		3	Screw-Cover Mtg
MP15	0510-0043		3	Ring-Ret Ext-E-.141 Dia
MP16	0515-0215		1	Screw M3.5 x 0.6 20MM-LG Pan-HD
J38	5060-7478	3	1	Terminal Assembly-Front Input
J40, J41	1250-0083	1	2	Connector-RF BNC
S5, S6	3101-2298	1	2	Switch-Slide Voltage Select

Figure 7-9. Change #10 in Figure 6-8

NOTE

The MP Designations used on this page apply only to those parts called out in Figure 6-11.

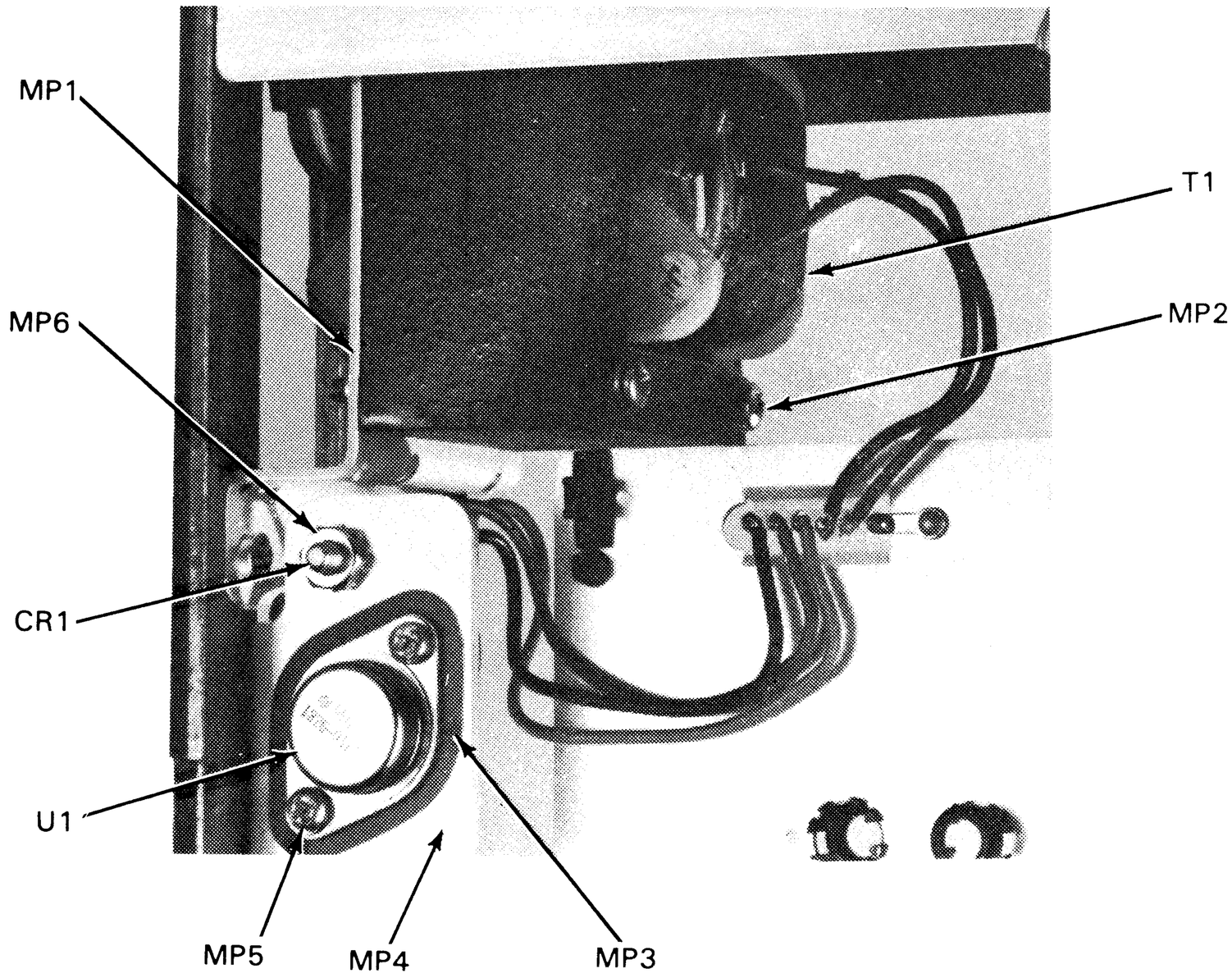

Reference Designation	-hp- Part Number	C D	Qty	Description
MP1	03456-01201	7	1	Bracket-Transformer
MP2	0515-0216		4	Screw-Mach M4 x 0.7 50MM-LG Pan-HD
MP3	0340-0580	3	1	Insulator-XSTR THRM-CNDCT
MP4	03456-01202	8	1	Bracket-Regulator
MP5	0624-0034		2	Screw-Tapping 6-20 0.5 Pan-HD
MP6	2740-0003		1	Nut-Hex 10-32 x .375 AF
CR1	1902-1217	8	1	Diode-Znr 6.2V 5%
T1	9100-0469	8	1	Transformer-Power
U1	1826-0181	1	1	Voltage Regulator-LM323K

Figure 7-10. Change #10 in Figure 6-11

7-27. Change #11

7-28. For serial numbers 2201A04795 and below. Page 6-6/6-7, Table 6-4 (Replaceable Parts). Change RAMs A4U10 and U11 to the following:

Ref. Des.	-hp- Part Number	C D	Qty	Description
A4U10	1818-1213		2	IC NMOS 8192-BIT RAM
A4U11	1818-1213			IC NMOS 8192-BIT RAM

SECTION VIII
SERVICE

8-1. INTRODUCTION.

8-2. This section has the 3456A's Theory of Operation, Servicing Procedures, and Safety Considerations.

8-3. SAFETY CONSIDERATIONS.

8-4. This instrument has been designed to meet international safety standards. To maintain these standards, the cautions, warnings, and other safety related information in this Manual must be followed. Any servicing or adjustment should only be performed by service trained personnel.

8-5. Any adjustment, maintenance, or repair of the instrument while power is applied and which requires that the covers be removed, should be avoided as much as possible. If any work is done on the instrument while power and/or voltage is applied, the work should be carried out by a skilled person who is aware of the hazard involved.

WARNING

Any interruption of the protective grounding conductor (inside or outside the instrument) or disconnection of the protective earth terminal is likely to make the instrument dangerous. Intentional interruption of the protective grounding conductor is strictly prohibited.

8-6. It is possible for capacitors inside the instrument to be charged when the instrument has been turned off or its power source disconnected.

8-7. Make sure that only the recommended fuse type (slow blow, correct current rating, etc.) is used for replacement. The use of repaired fuses or the short-circuiting of fuse holders must be avoided.

WARNING

The service information given in this Manual is normally used with the protective covers removed and with power applied to the instrument. Voltages or signals at many points may, if contacted, result in personal injury.

8-8. RECOMMENDED TEST EQUIPMENT.

8-9. The recommended test equipment is listed in this Manual's Section I (Table 1-2) and in Section IV (Table 4-1).

8-10. THEORY OF OPERATION.

8-11. Introduction.

8-12. The following is a discussion of the -hp- Model 3456A's Simplified Block Diagram Theory of Operation. Refer to the Simplified Block Diagram in Figure 8-1 for this discussion. A more detailed block diagram is shown on a foldout page preceding the schematics.

8-13. The 3456A can be separated into two main areas, the Inguard and Outguard Section. The purpose of the Outguard is for instrument control. The Inguard Section is responsible for making the analog measurements. Communication between the sections is done by the Isolation Logic circuitry.

8-14. Outguard Section.

8-15. This section has mostly logic circuitry and associated power supplies. The main blocks in the section are the Main Controller, HP-IB Interface, Front Panel Interface, and Outguard Isolation Logic.

8-16. The purpose of the Main Controller circuitry is to control the 3456A's measurement operation (Inguard Operation) and manage communication between the Front Panel control and HP-IB Interface circuitry. The controller also performs the 3456A's math calculations. The Main Controller circuitry consists of a microprocessor, ROMs, RAMs, and other digital circuitry.

8-17. The Front Panel Control circuitry is used to interface between the front panel and main controller. This is done to pass display information from the controller to the front panel and local set-up information (DCV, ACV, etc.) from the front panel to the controller.

8-18. The HP-IB circuitry provides information transfer between the main controller and the HP-IB. The information is typically in the form of instrument control commands (DCV, ACV, etc.), HP-IB commands (Remote, Listen, etc.), and transfer of measurement data.

NOTE

HP-IB is Hewlett-Packard's implementation of IEEE Std. 488-1975, "Standard Digital Interface for Programmable Instrumentation."

8-19. Inguard Section.

8-20. The basic functions of the -hp- Model 3456A are DC, AC (RMS), Ohms, and Ratio Measurements. The

Inguard section has the analog measurement circuitry, Analog to Digital (A/D) Converter, Inguard Logic, and power supplies. An additional circuit is the Inguard Controller. Its main purpose is to control the A/D operation. Highly stable components and circuits are used to provide the accuracy and resolution supplied by the 3456A. Thin-film resistors (.01%) are used in all of the critical, gain setting stages.

8-21. The following explains a typical measurement sequence.

a. A certain 3456A Function, Range, and Operating mode is selected by either the front panel buttons or over the HP-IB.

b. The set-up information is received by the main controller. The controller then sets up the Inguard to do the desired measurement. This is done through the Isolation Logic circuitry. The set-up information is also sent to the front panel control circuitry to be displayed on the front panel.

c. If the 3456A is set up to take a dc reading, the input is applied at the VOLTS input terminals. The signal then is applied through the FRONT/REAR switch to the Input Circuitry and then the Input Amplifier. The purpose of the Input Circuitry is to:

1. Attenuate the input voltage using a 100:1 attenuator, if the 3456A is either on the 100 V or 1 kV range.
2. Connect the Input Amplifier to ground for an Autozero measurement.
3. Connect the VOLTS and RATIO REF terminals to the Input Amplifier for a multiple measurement (Ratio and 4-Wire Ohms).
4. Connect the input signal to the 3456A's RMS Converter, if the instrument is in the ACV or ACV + DCV function.

d. An Autozero feature compensates for drift in the DC Input Amplifier by taking two measurements for each input measurement. The first is taken with the input to the amplifier shorted to ground. This reading is stored in memory and subsequently subtracted from the second reading, the regular measurement, with the short to the amplifier removed.

e. For an ac measurement, the input is applied at the VOLTS terminals to the Input Circuitry and then the RMS Converter. The Converter changes the input voltage to a dc voltage and then applies it to the Input Amplifier. Range attenuation and amplification is done in the Converter before it reaches the Input Amplifier. The full scale output of the Converter is +10 V.

f. For an Ohms measurement, the 3456A's Ohms Current Source is used to supply the dc reference current to the unknown resistance. A dc voltage drop proportional to the value of the current and the unknown

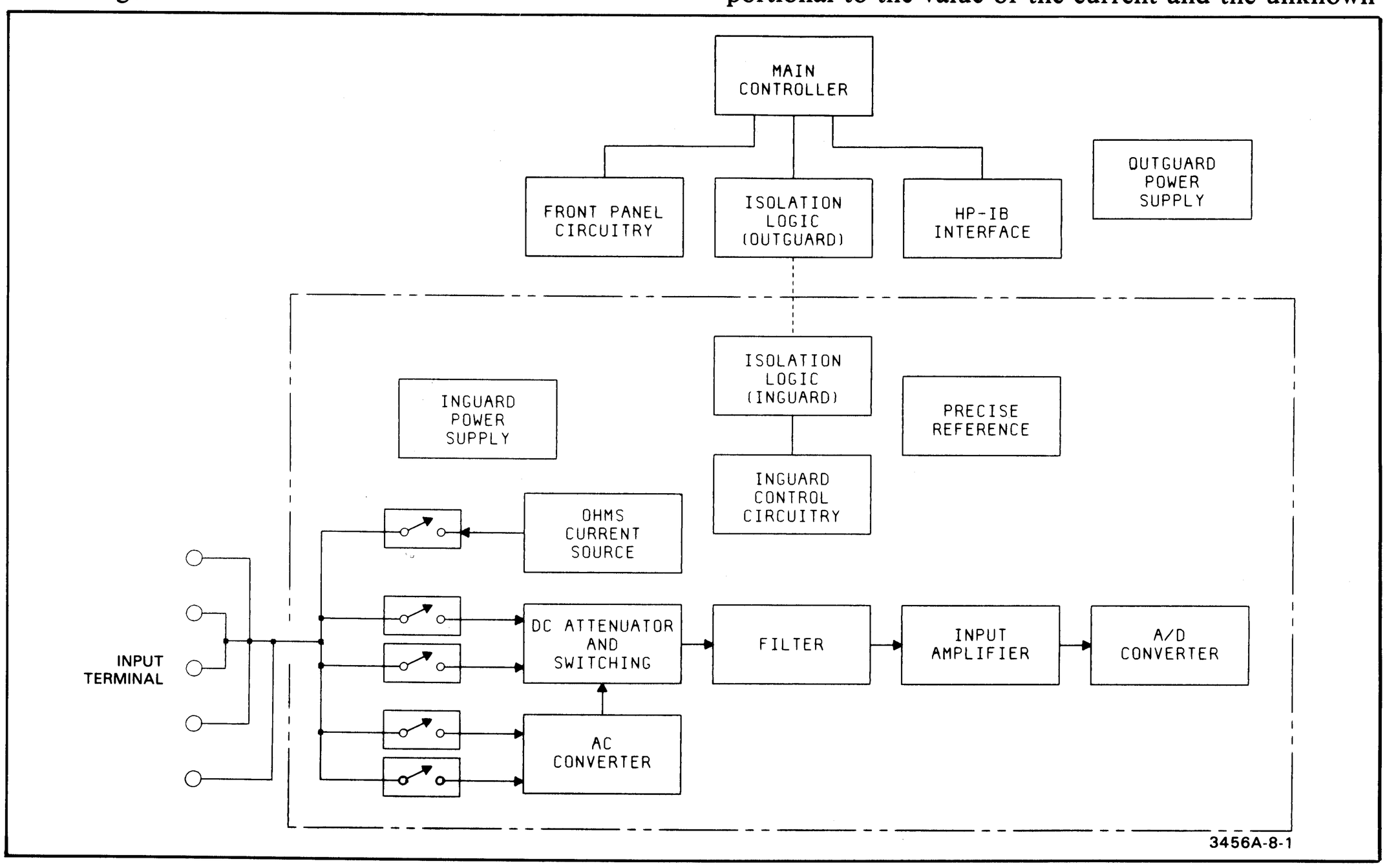

Figure 8-1. Simplified Block Diagram.

resistance is then applied through the Input Terminals and the FRONT/REAR switch to the Input Circuitry. This dc voltage is then applied to the Input Amplifier.

g. For a ratio measurement, two complete measurement cycles are taken. The first cycle is either a DC, AC, or AC+DC measurement. The second cycle is the measurement of the DC reference.

h. The Input Amplifier is used as a buffer and also does voltage amplification. This is to provide the same input level to the A/D Converter for full scale inputs in all functions and ranges. The amplifiers gain is 1 in the ACV function and on the 10 V range in the DCV function. With the 1 V and 100 mV ranges the gain is 10 and 100 respectively and in the high Ohms ranges the gain is 2. In the 100 V and the 1000 V ranges, the gain is X10 amd X1 respectively, with the input signal divided by the 100:1 Divider. The different gain configurations provide an A/D Converter full scale input of 10 V dc.

i. The A/D Converter converts its input from a dc voltage to digital information by using a new, improved multi-slope conversion technique (Multi-Slope II). This information is sent to the Inguard Controller where the Autozero reading is subtracted from the measured reading. The compensated reading is then sent to the Outguard Controller via the Isolation Logic circuitry. The Multi-Slope technique allows for slow as well as fast circuit operaiton while ensuring high accuracy, stability, and resolution.

j. The information is then processed by the Main Controller and is displayed on the front panel and/or sent to the HP-IB. If a math feature is selected, the math calculation is done before the recalculated reading is displayed.

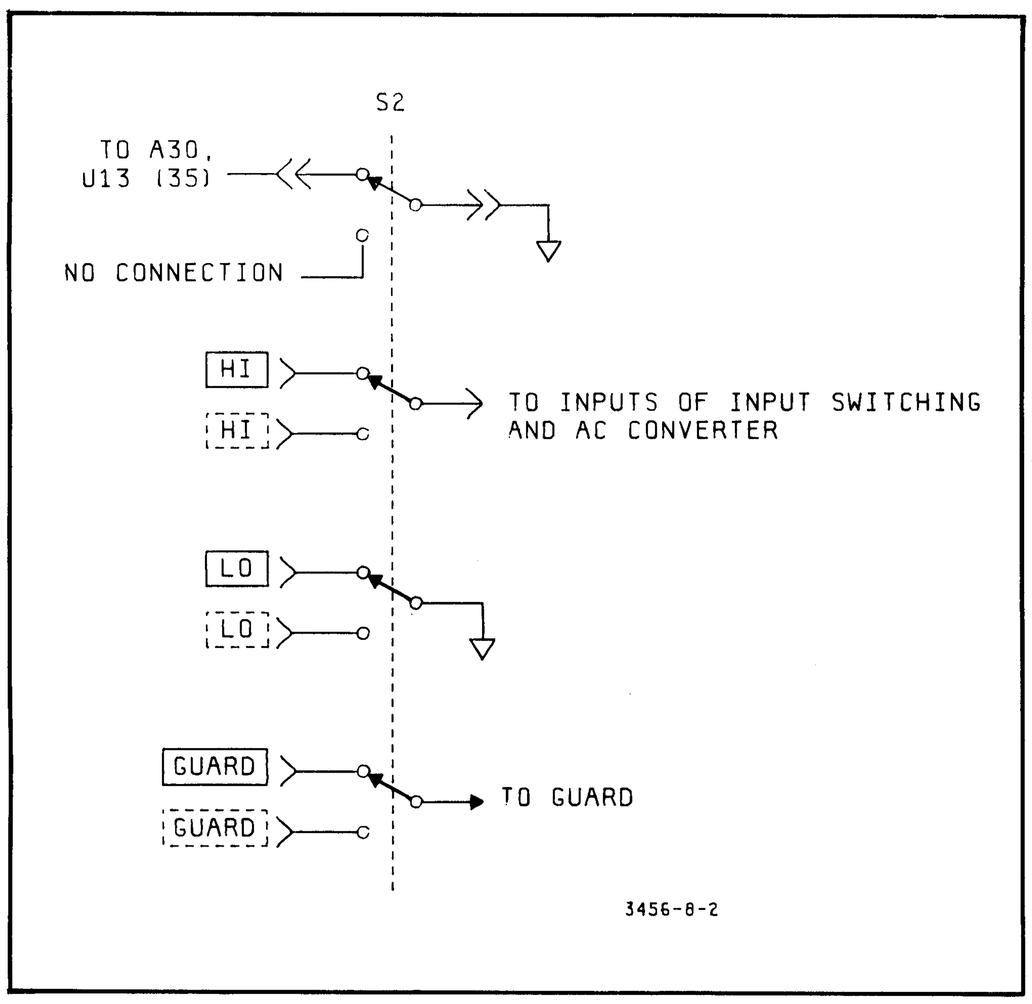

Figure 8-2. Simplfied Front/Rear Switch Circuit.

8-22. Another circuit in the Inguard Section is the Reference Supply. Its purpose is to supply an accurate reference voltage for the Ohms Current Source and the A/D Converter.

8-23. Front/Rear Switch.

8-24. Refer to Figure 8-2 Simplified Front/Rear Switch Circuit for the following discussion. The input signal applied to the HI and LO VOLTS input terminals (solid border--front terminals, dashed border--rear terminals) passes through the Front/Rear switch to the inputs to the Input Switching and the AC Converter. With the Front/Rear switch in the front position, a low logic state via a ground connection is sensed by the Inguard Logic microprocessor. This feature is used to remotely determine over the HP-IB the position of the Front/Rear switch.

8-25. Input Protection.

8-26. Refer to Figure 8-3 High Voltage Protection Circuits for the following discussion. A 2.5 kV surge voltage protector (E1) in series with a R-C network (combination connected between HI and gnd) provides high voltage protection for the input circuits. E1 will arc over at 2.5 kV (± 20%) peak levels. E1 also provides static discharge protection (up to 15 kV) from very-short duration transients by clipping off the peaks to a safe level. Guard is protected from excessive excursions by a 430 volt varistor (RV1).

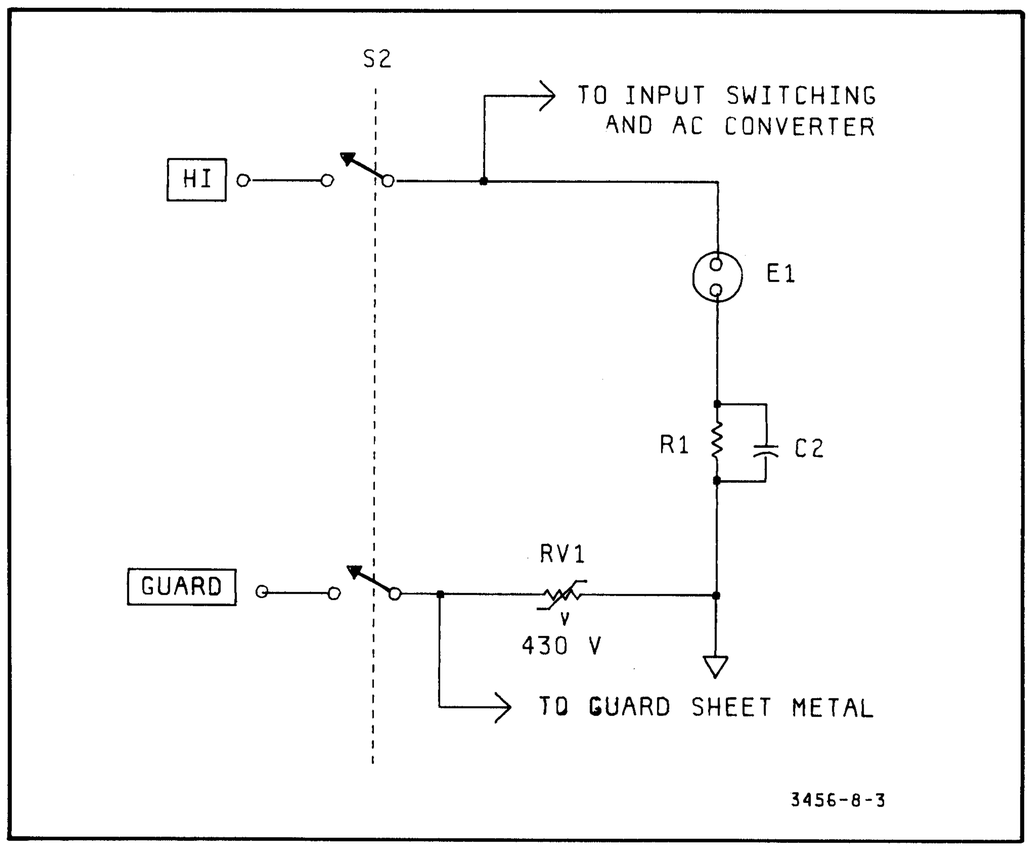

Figure 8-3. High Voltage Protection Circuits.

8-27. Additional high voltage protection is provided in the ohms, the dc, and the ac circuit measurement paths. These circuits are discussed in the sections covering ohms, dc, and ac measurements.

8-28. DC Volts Measurement.

8-29. A20 Board Component Numbering. The A20 board, which contains the majority of the circuits that will be discussed, is made up of six separate circuits with

each having its own numbering sequence. Table 8-1 summarizes this numbering structure. Note that the 600 series numbers are used for calibration (Cal) components and that the numbering scheme deviates in this instance due to the different Cal components being used in four of the A20 circuits. Locating these components together, behind a removable front panel section permits a complete instrument calibration while the instrument is rack mounted.

Table 8-1. A20 Board Component Numbering Structure.

Component Numbers	Circuit Name
100 Series	Input Switching
200 Series	Ohm's Current Source
300 Series	Input Amplifier
400 Series	A/D Converter
500 Series	Reference
600 Series	Calibration
700 Series	Range and Function Control Logic

8-30. Input Switching and "Range and Function Control Logic". All of the reed relay and Fet switching control signals for the Input Switching circuits, except for HAF, LMES, and LGND, come from the Range and Function Control Logic (see Figure 8-4 Range and Function Control Switching). Logic Signals HAF, LMES, and LGND come directly from the Inguard microprocessor A30-U13. A30-U13 also provides the logic input for the Range and Function Control Logic.

8-31. 100 V and 1000 V Ranges. Relay K102 and Fet switch Q109 will be enabled by the control logic for the 100 V and 1000 V ranges (see Figure 8-8 Simplified Schematic for Input Switching). The 100:1 voltage divider (9.9 M and 99.975 k fine-line resistors) in this path attenuates the input to the desired levels. Current-limit protection for these ranges is provided by the 2.55 k ohm resistor (R101) in series with the 10 M ohm divider (see Schematic **1**, Input Switching).

8-32. 100 mV, 1 V, and 10 V Ranges. Relay K103 (a low thermal relay) and Fet switch Q116 are enabled for the 100 mV to 10 V ranges. Current-limit protection for these ranges is provided by four 27 k ohm resistors in series with K103.

8-33. Fet Switching Technique. The comparators that bias the Fet switches on or off have open collector transistor outputs. These outputs are connected via 100 k ohm pull-up resistors to the output levels of either Gate Bias Amplifier #1 or #2, except for U104b and U104c (see Figure 8-5 Comparator/Fet-Switch circuit). With the +2 volt reference applied to its negative input terminal, a low logic input signal will cause the comparator's output to be driven to −18 V and the Fet switch will be off (refer to Table 8-2). With a high logic input signal, the comparator's output transistor is turned off and its output will therefore rise to the pull-up voltage level (usually the input signal level). The N-channel Fet switch will be closed with this pull-up voltage applied to its gate.

8-34. The pull-up resistors for U104b and c are connected to ground, thus their outputs will rise to ground when they are turned off. Note that in some cases the +2 volt reference is applied to the positive terminal of the comparator rather than the negative terminal. Comparator operation will then be exactly opposite of that just described. Table 8-2 lists all of the normal comparator input levels, comparator outputs, and resultant Fet switch state. The 10 k ohm resistors connected to the gates of the Fet switches along with the stray capacitance act as low pass filters to prevent pickup and rectification of stray AC signals.

Table 8-2. Comparator Operation.

Comparator's Input Pos. Term.	Comparator's Input Neg. Term.	Comparator's Output	Fet Switch
0 V	+2 V	−18 V	Open
+5 V	+2 V	Pull-Up Voltage	Closed
+2 V	0 V	Pull-Up Voltage	Closed
+2 V	+5 V	−18 V	Open

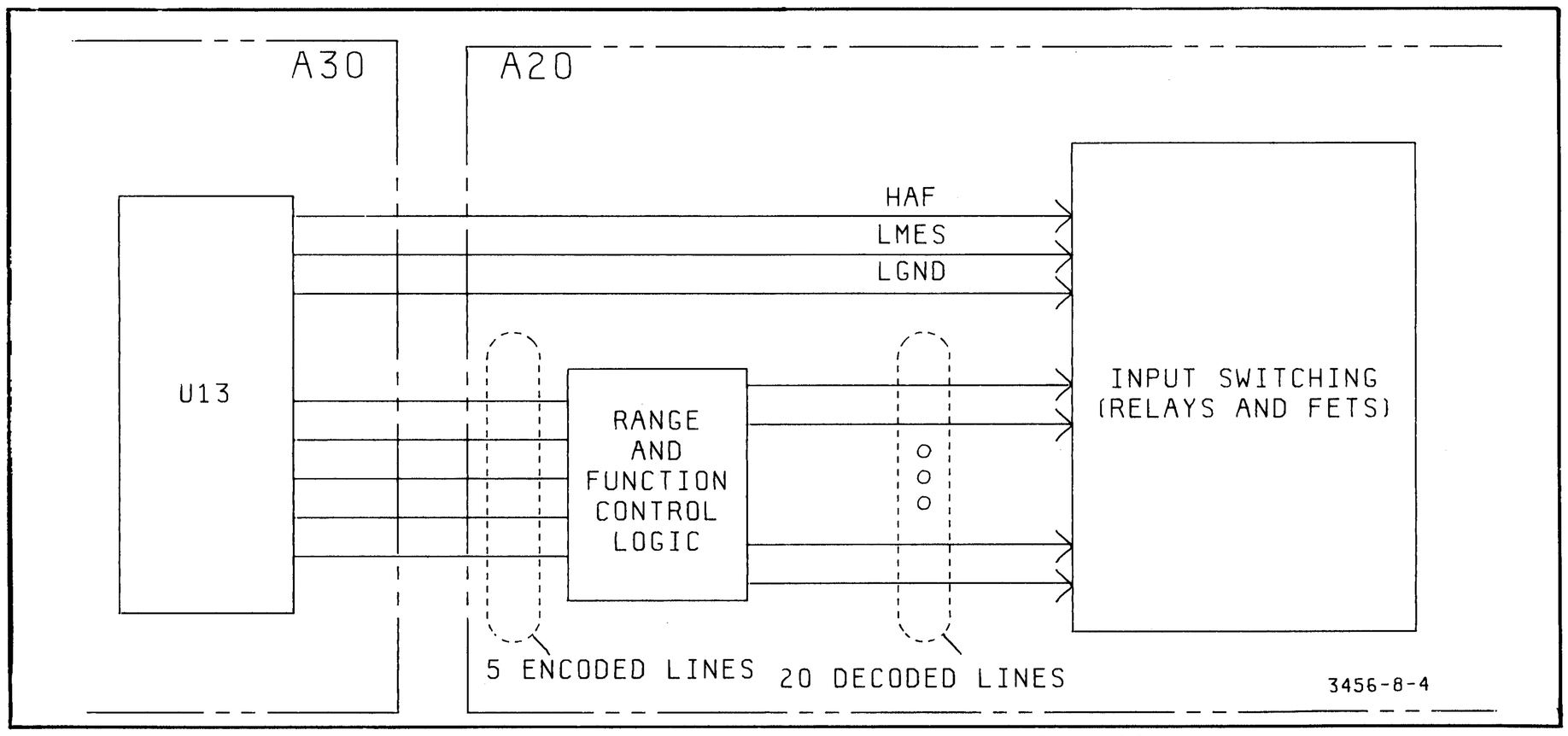

Figure 8-4. Range and Function Control Switching.

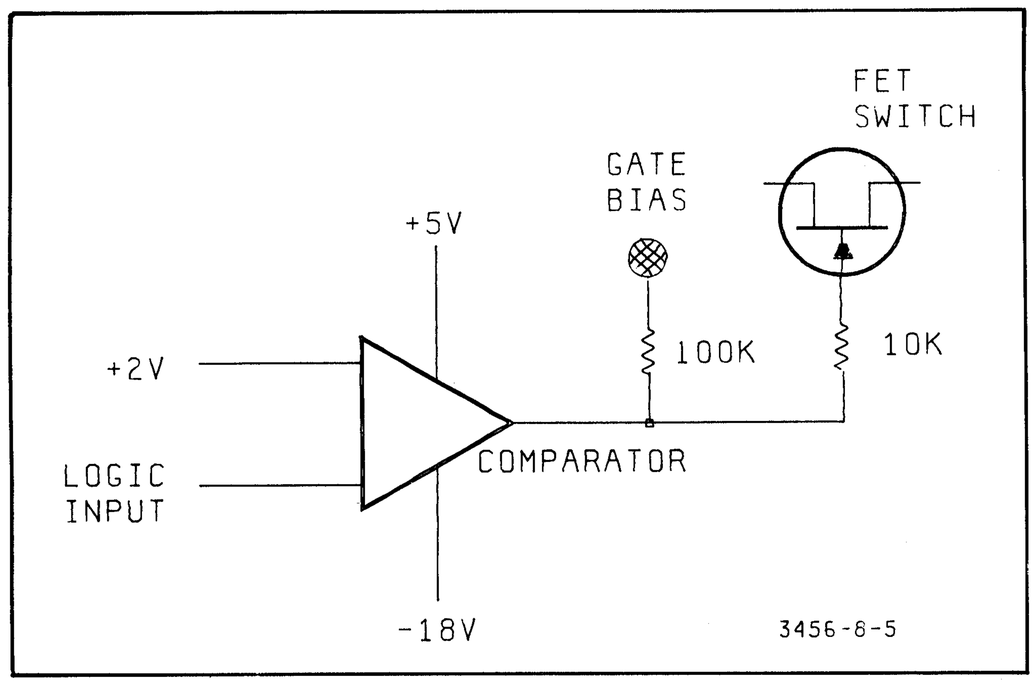

Figure 8-5. Comparator/Fet-Switch Circuit.

8-35. Gate Bias Amplifier #1 (GB1). GB1, a carbon copy of the input signal being measured, is fed to many of the input switching circuits for signal conditioning purposes. The Gate Bias Amplifier (A20, Q120 and U105) supplies a gate bias voltage for the Fet switches to make the gate-to-source voltage equal to zero during the time the Fet switches are on. This amplifer has unity gain and uses a Fet input a prevent loading the input signal source. Output from the bias amplifier is coupled through 100 K resistors to the gates of the input switching Fets.

8-36. Charge Conditioning Circuits. When the instrument goes thru an autozero cycle, stray capacitance causes inaccurate measurements and/or noise. The charge conditioning circuits are designed to reduce these errors. Charge conditioning circuits are used in the input switching stages to prevent capacitive loading of the input signals and ensure accurate readings when autozero is on. These circuits consist of a charge dump adjustment, charge correction adjustment, and a precharge stage. Variable resistor R148, the charge dump adjustment, provides DC charge cancellation at the summing node going to the source of Q103. Variable resistor R147, the charge correction adjustment, provides AC charge cancellation at the node connected to the drain of Q103. Each of these two circuits are capacitive coupled to their respective nodes via a printed circuit ring around a "Teflon cloverleaf" solder tie-point. The Teflon insulator serves as the capacitor dielectric while the P.C. ring and cloverleaf tie-point serves as the capacitor plates. The precharge circuit uses GB1 to charge stray capacitances (at summing node for the input amplifier) when Fet switch Q102 is closed by U104a.

8-37. Analog Filter. The Analog Filter is an active 3-pole filter (see Figure 8-6 Analog Filter) that can be enabled or disabled with the front panel filter button. This circuit is basically a 5 Hz low-pass filter and an inverter whose output is used for phase-cancelling (in the Input Switching circuits) those unwanted frequencies above 5 Hz (greater than 60 dB attenuation at frequencies of 50 Hz and higher). This is done in the following manner. The output of Gate Bias Amplifier #1, a carbon copy of the input signal, is AC coupled via C107 (pole #1) to the inverting input of Op Amp U106. C106 in the negative feedback path and C105 in the output serve as poles #2 and #3 for this low pass filter. The output signal is fed via Fet switch Q101 (100 V and 1000 V ranges) or Q114 (.1 V, 1 V, and 10 V ranges) to the

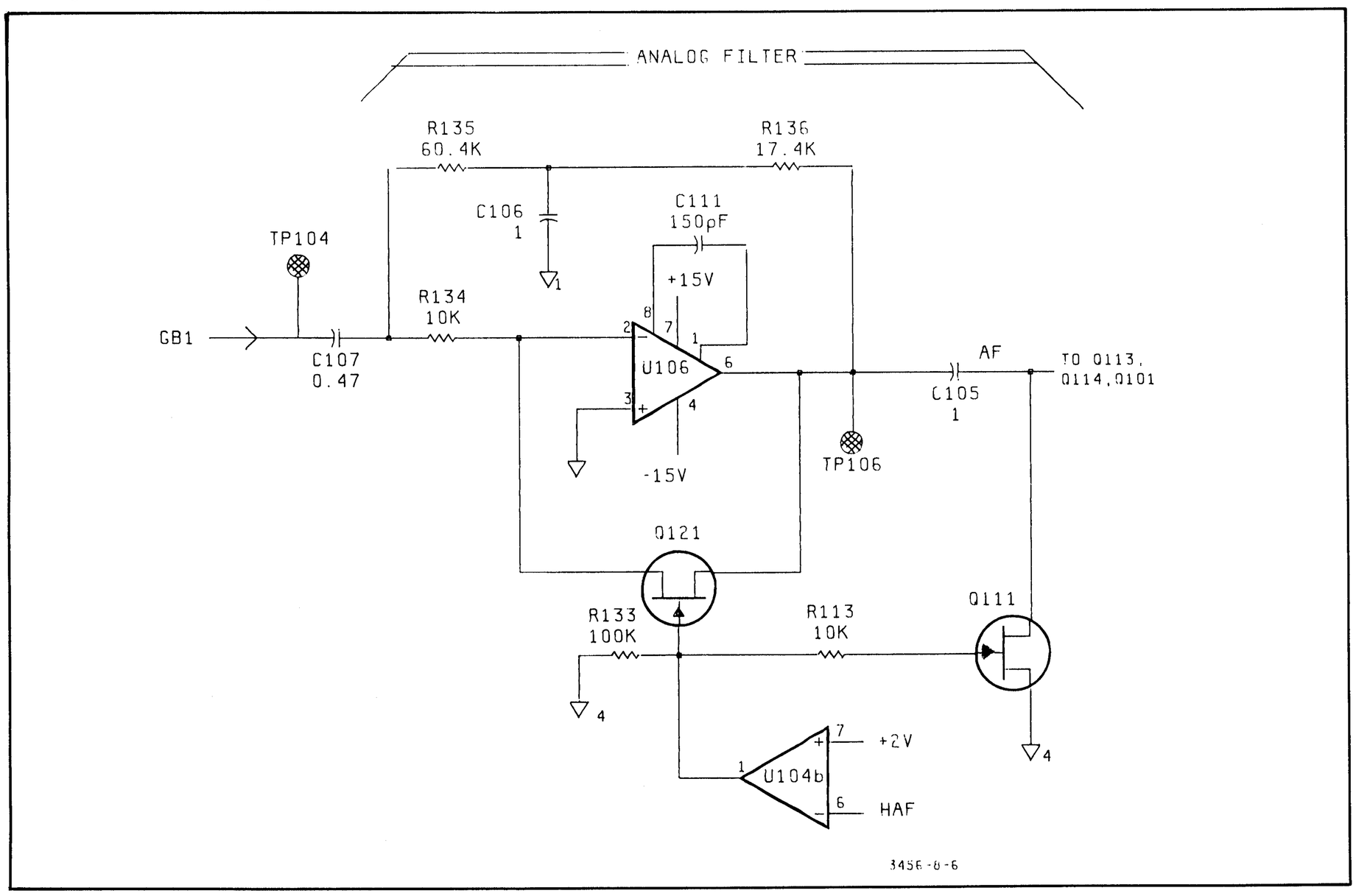

Figure 8-6. Analog Filter.

nodes where phase cancellation will occur. The HAF (High Analog Filter) logic signal, via comparator U104b, will open Fet switches Q121 and Q111 when the filter is enabled (see Figure 8-6). When HAF is low (filter disabled), Q121 and Q111 will be closed. Q121 presents a feedback path to prevent U106 from going into saturation and Q111 grounds the output of the filter so the source of Fet's Q101 and Q114 will be clamped to ground.

8-38. Autozero. Autozero (AZ), which can be disabled or enabled with the front panel AZ button, is used to compensate for offsets in the DC Input Amplifier. AZ is enabled when the 3456A is first turned and also when the front panel reset button is pressed. Two separate measurements are taken during an input measurement cycle with AZ enabled. The first is taken with Fet switch Q104 closed. This shorts the Input Amplifier's input to ground at which time its DC offset is measured and stored in Inguard memory. The second, the input signal measurement, is taken with Q104 open (short to Input amplifier removed) and Fet switch Q103 closed. The DC offset error stored in memory is subtracted from the input signal measurement with the result sent to the main controller in the Outguard for front panel display. The 3456A will continue to toggle between Q104 and Q103 taking two measurements for each input measurement thus allowing for correction of any zero drift error introduced by the DC Input Amplifier.

8-39. When AZ is disabled, one "zero offset" measurement is taken and stored in memory—this single offset value is subtracted from each of the following input signal measurements. The 3456A reading rate is therefore increased with AZ disabled since only one measurement is taken for each reading cycle. The zero offset value in memory is updated when a change in the instrument's state is made (e.g. range, function, etc. change). In addition, Fet switching transients, which may affect high impedance networks connected to the 3456A's input, will be eliminated when AZ is off.

8-40. Input Amplifier.

8-41. General. The Input Amplifier is a non-inverting, selectable gain DC voltage amplifier with excellent common mode rejection (CMR) and accurate gain. The bandwidth of the amplifier is approximately 6 kHz. To prevent amplifier slewing, the bandwidth of the input signal is limited to approximately 3 kHz by the Input Switching Circuits.

8-42. Circuit Description. Refer to Figure 8-7 Simplified Schematic for Input Amplfier and Schematic **3**, Input Amplifier for the following circuit description. The Input Amplifier consists of three stages (Q310/Q311, U307, and U308) with an open loop gain of approximately 140 dB. The Fet input stage of Q310 with Q311 connected in cascade has an open loop gain of 40. Fets are used to provide low bias current, low noise, and high CMR. U302, a transistor package with two PNP's and two NPN's connected to sense two current mirrors (−12 V Ref. to ground and −18 V to ground) provide a stable current source for these Fet's to assure this high CMR.

8-43. U307 has an open loop gain of 10 and presents an approximate nominal +5 V DC level to the negative input terminal of U308. The gain of U308, which is dependent on the frequency, has a nominal open loop gain of

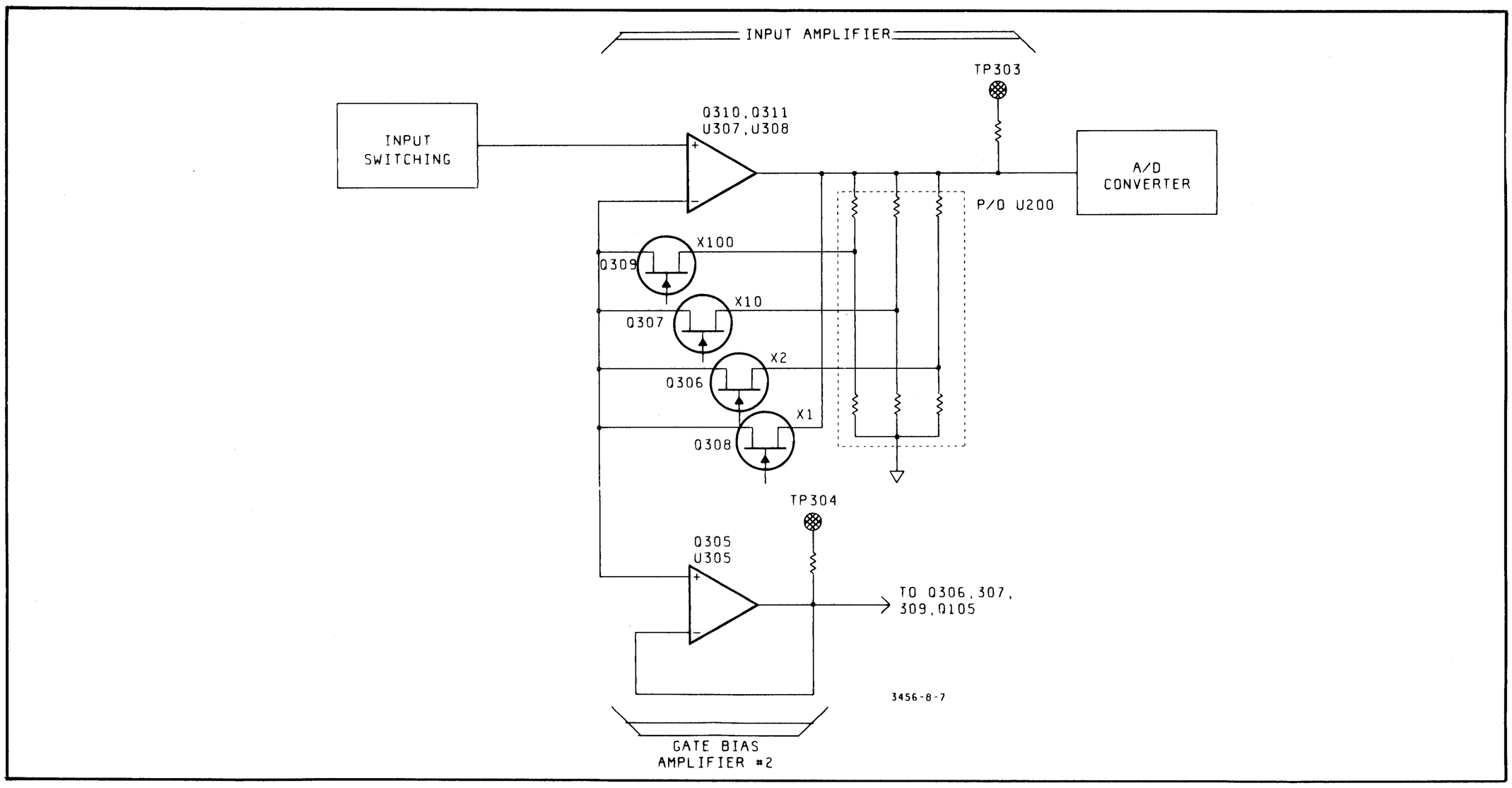

Figure 8-7. Simplified Schematic for Input Amplifier.

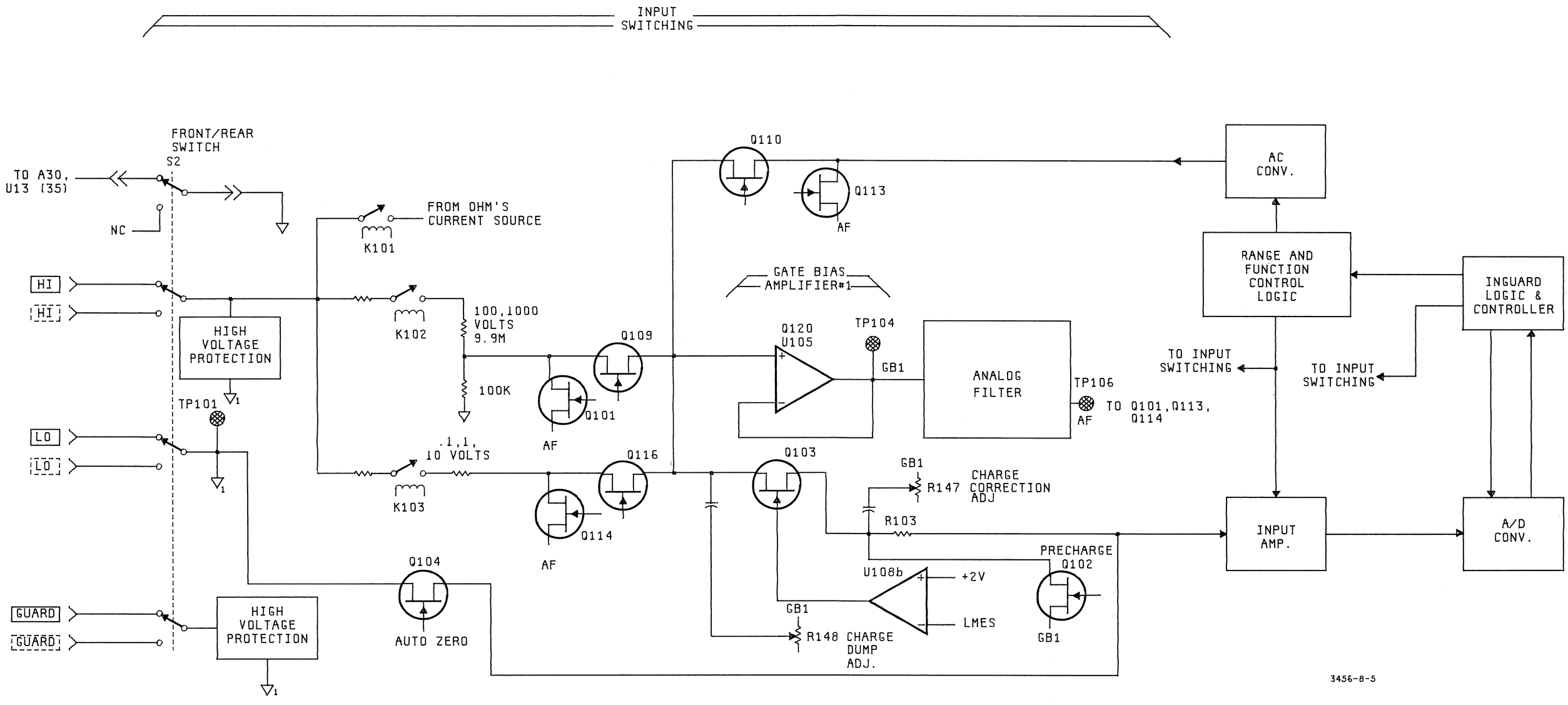

Figure 8-8. Simplified Schematic for Input Switching.

87 dB. A selectable integrator circuit (consisting of C303, R327, R326, R325, R324, Q302, Q303, Q304. and U308) assures a high DC gain with a constant bandwidth when the feedback path (gain) is changed. Selectable gains of 1, 2, 10, and 100 are provided by the four individual gain-setting feedback paths between U308 and Q310 and the four selectable resistance choices between U307 and U308. With full-scale inputs, the output of the Input Amplifier is 10 volts. Table 8-3 summarizes the amplifier's gain for all functions and ranges.

Table 8-3. Input Amplifier Gains.

Function	Range	Gain
DCV	100 mV	100
DCV	1 V	10
DCV	10 V	1
DCV	100 V	10 *
DCV	1000 V	1 *
ACV	All Ranges	1
Ohms	100 ohms	100
Ohms	1K, 10K ohms	10
Ohms	100K-1G ohms	2

*100:1 voltage divider in Input Switching circuits for these ranges.

8-44. Gain Switching. HA1, HA2, HA10, and HA100 logic commands (5 volt logic) from the Range and Function Control Logic circuits select the feedback path and also the resistance between U307 and U308 for the respective 1, 2, 10, and 100 gain configurations. Comparators U304a, U304c, U304d, and U304b control the Fet switches in the feedback paths for the respective gains of 100, 10, 2, and 1 (see Section 8-33 for Fet switching theory). Note that Fet switches Q302, Q303, and Q304 are not controlled by comparators but are controlled directly by the logic signals from the Range and Function Control Logic circuits. Thin-film resistors (U200 fineline resistor package) with .01% tolerance are used in the feedback paths for the gains of 100, 10, and 2. Gain of 2 is used for Ohms measurements only.

8-45. Gate Bias Amplifier #2 (GB#2). GB#2 is a unity gain amplifier whose output is a buffered version of the input to the Input Amplifier. The output of GB#2 is fed, for signal conditioning purposes, to three of the four Fet switches in the gain selecting feedback paths for the Input Amplifier and also to Fet switch Q105 in the Input Switching circuit. GB#2 supplies a gate bias voltage for these Fet switches to make the gate-to-source voltage equal to zero during the time the switches are on. TP304 is isolated from the output of GB2 by R319 to prevent circuit loading when an oscilloscope is used to monitor this test point.

8-46. +2V, +18V, and +30V Supplementary Voltage Sources. The +2V source supplies a reference voltage for the Input Amplifier comparator stages (U304 and U301). The +18V source is used by the Gate Bias Amplifier #1 circuit in the Input Switching section in addition to Gate Bias Amplifier #2 and Op Amp U308 in the Input Amplifier. If the +18V source fails or drops below approximately +14.4V, the CR302/+15V circuit serves as a back-up voltage source to protect those circuits using +18 volts. The output from the regulated +30V source is used by the input voltage divider in the +18V source and by Q311/310 and U307.

8-47. Low Ohms Offset Circuit. The Low Ohms Offset circuit (connected to pin 12 of U200) is used for ohms measurement only—refer to the Ohms Measurement section for theory of operation.

8-48. ANALOG-TO-DIGITAL (A/D) CONVERTER.

8-49. General.

8-50. The 3456A Digital Voltmeter uses a technique called Multi-Slope II to convert analog input signals to digital information. This technique is called Multi-Slope II because it has many of the features of the original multi-slope technique (-hp- 3455A Digital Voltmeter). The Multi-Slope II method provides high speed and high accuracy analog to digital conversion.

8-51. Traditional Dual-Slope Converter. To better understand Multi-Slope II, look first at the traditional dual-slope technique (Figure 8-9). This technique can be divided into two separate operations: runup and rundown. During runup the input voltage is integrated by charging a capacitor for a defined time period. After runup, the integrator's output voltage is proportional to the input voltage. Rundown measures this voltage by applying a reference of opposite polarity and noting the time required to discharge the capacitor.

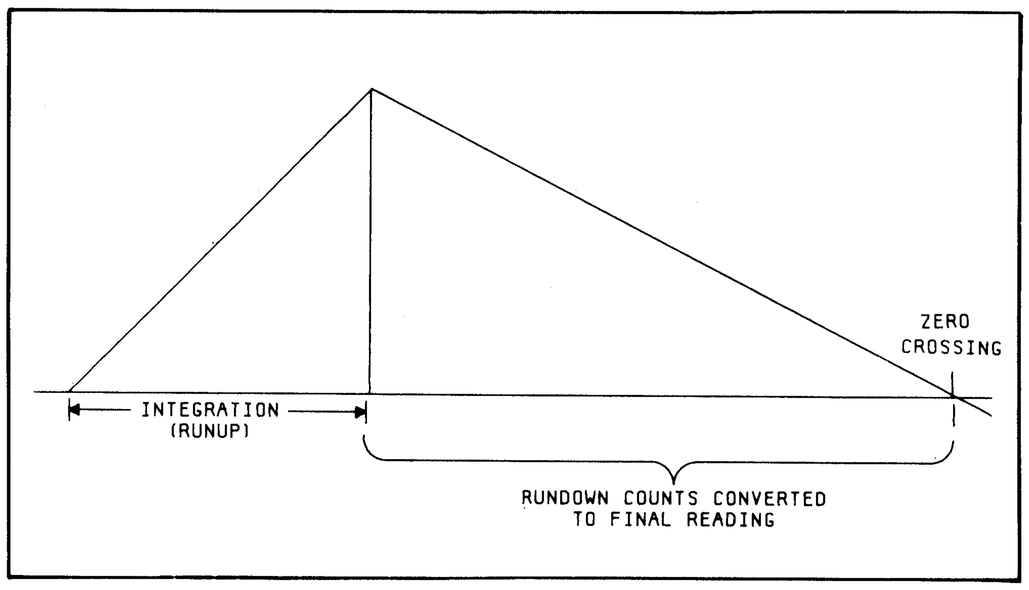

Figure 8-9. Dual-Slope Conversion.

8-52. Dual-Slope is slow because the final measurement is not known until zero crossing. Multi-Slope II is faster primarily because of the rundown technique used. Also, Multi-Slope II is more accurate because of its unique runup method.

8-53. Multi-Slope II A/D Converter—Runup. During runup, the input signal is applied to the integrator for a set time period. This time period depends on the operator-selected integration time ("Number of Power Line Cycles (PLC) Integrated"). Table 8-4 lists these PLC's and their associated integration periods.

8-54. Runup.

8-55. Runup Concept. Figure 8-10 illustrates the integration waveform (slopes) appearing at TP402 (integrator output) of the A/D Converter for a zero volt input. A reference ramp (S + 4 or S − 4 slope) is switched in for fixed times during the integration period. When zero-crossing occurs during a slope period, the crossover is detected by the comparator circuit in the A/D Converter (see Figure 8-11). Zero-crossing information from the comparator is sent to the Inguard Logic. The Inguard Logic circuits send back to the A/D Converter the proper logic signals to reverse the direction of the slope for the next slope period. The circuits that do the actual slope direction change are shown in the "Logic and Decoding Circuits" box. Switching the Y1 and Y2 circuit paths from ground to − 12 Va (reference voltage) changes the integrator output from a S + 4 slope to a S − 4 slope. A S + 0 or S − 0 period (no slope) occurs at the end of each A/D count period.

Table 8-4. Runup Integration Time Periods.

Integration Time (PLC)	Max. NR. Digits Displayed	Integration Time Periods In Milliseconds 50 Hz	60 Hz
100*	6½	—	—
10	6½	200	166.67
1	6½	20	16.67
.1	5½	2	1.67
.01	4½	.2	.167

*For an integration setting of 100 PLC, the digitally derived average of ten successive 10 PLC readings is used.

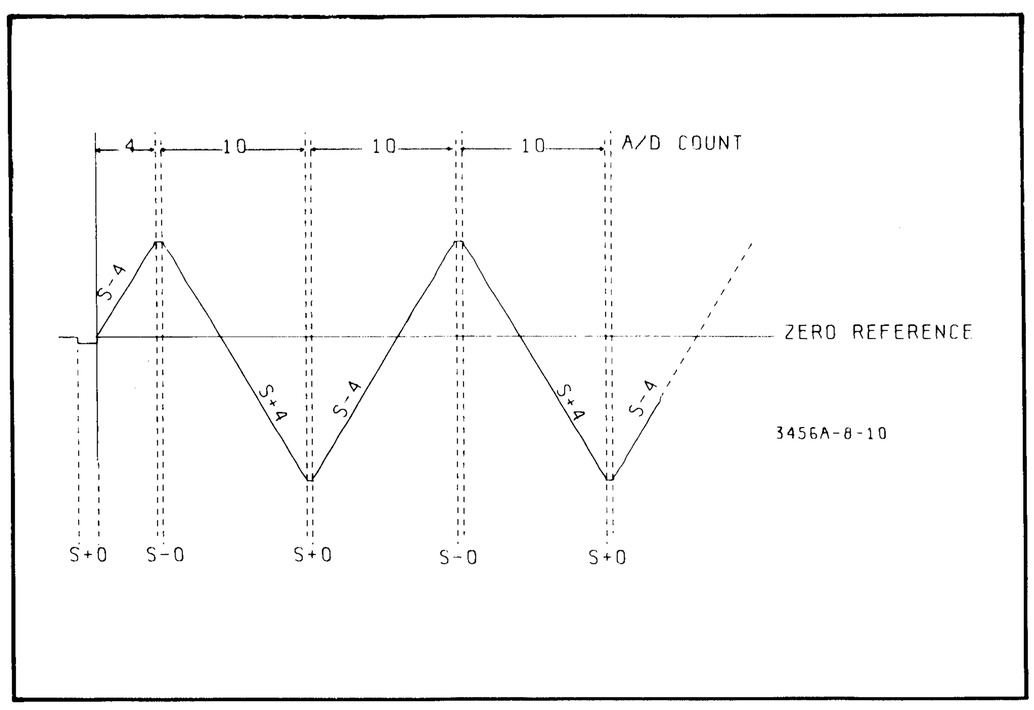

Figure 8-10. Runup Slope For Zero Volts Input (.1 PLC).

8-56. Figure 8-10 shows an initial runup (S − 4) of 4 A/D counts for a .1 PLC setting. For 1, 10, and 100 PLC settings, the S − 4 slope lasts for 8 A/D counts. This causes the observed dc offset to be different when these other PLC's are selected.

8-57. The small negative pulse preceeding the first S − 4 slope has no circuit significance. This pulse is due to capacitive coupling of the gate drive pulse through the Fet switches in the A/D Converter's input.

8-58. When .01 PLC is selected for zero volt input, the waveform at TP402 resembles that of a dual-slope converter. The first slope in this waveform is the beginning of the rundown cycle. The small negative pulse (preceding the first slope) lasts for the entire integration period.

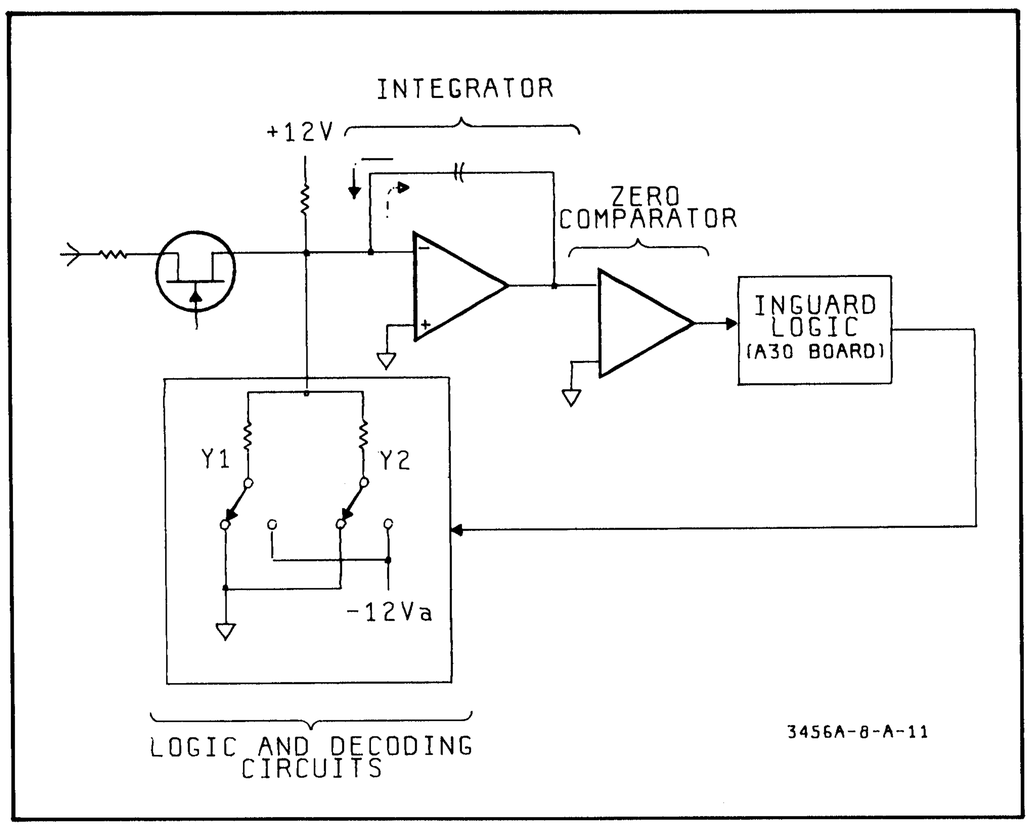

Figure 8-11. Simplified Zero-Crossing Circuit (A/D Converter).

8-59. Figure 8-12 illustrates the integration waveforms (slopes) for a full-scale input (− 10 V) and a 50% of full-scale input (− 5 V) when .1 PLC is selected. Since the integrator circuit inverts the input signals, the negative inputs illustrated result in positive outputs. A mirror image of the waveforms illustrated in 8-12 would result if the input signal polarities are reversed. T1 is the initial time period (before a S + 4 slope is applied) when the circuit is integrating just the input voltage. During the T2, T3, etc. periods, a slope voltage plus the input voltage are applied simultaneously to the integrator's input. After the initial 4 A/D count period (T2) and after each of the following 10 A/D count periods (T3, ···), a no-slope condition occurs. This is called S ± 0 (T4 period, see upper right area of Figure 8-12). Any charging during these S ± 0 periods is the result of the input signal voltage. The Y1 circuit resistor is switched to − 12 Va with the Y2 path to ground for a S + 0 period. The Y2 circuit resistor is switched to − 12 Va with the Y1 path to ground for a S − 0 period. This alternate pattern compensates for any Y1/Y2 resistance differences that could affect the circuit's accuracy.

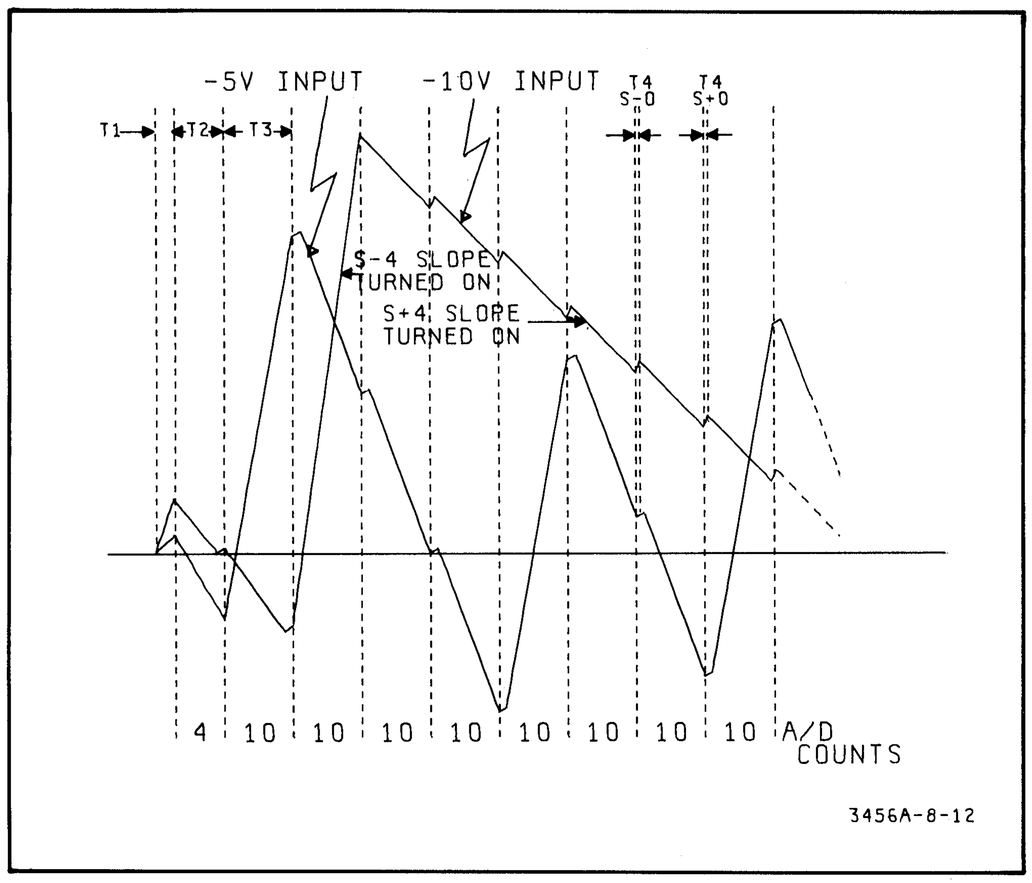

Figure 8-12. Runup Slope Sequence For Full-Scale Input (10V) And 50% Full-Scale (5 V) (.1 PLC).

8-60. A steep slope (S ± 4) is used during the integration period to keep the integrator charging rate high and to keep the average voltage after runup low. A high charging rate better utilizes the dynamic range of the integrator for low level inputs. This improves the circuit's immunity to noise during rundown by increasing the charge across the integrator capacitor. The average charge before rundown is kept low to minimize integrator capacitor dielectric absorption.

8-61. S + 4 and S − 4 Slope Generation. Figures 8-13 and 8-14 are simplified illustrations that show the slope generation concept used by the 3456A. The lower ends of both Y1 and Y2 circuit paths are switched to ground to generate an S + 4 slope (see Figure 8-13). For this condition, there is no current flow between the summing node (virtual ground) and the grounded Y1/Y2 circuit paths. Current (I) from the + 12 V reference supply flows through the summing node into the integrating capacitor (note polarity of capacitor charge). This generates the negative going ramp (S + 4 slope) shown at the output of the integrator.

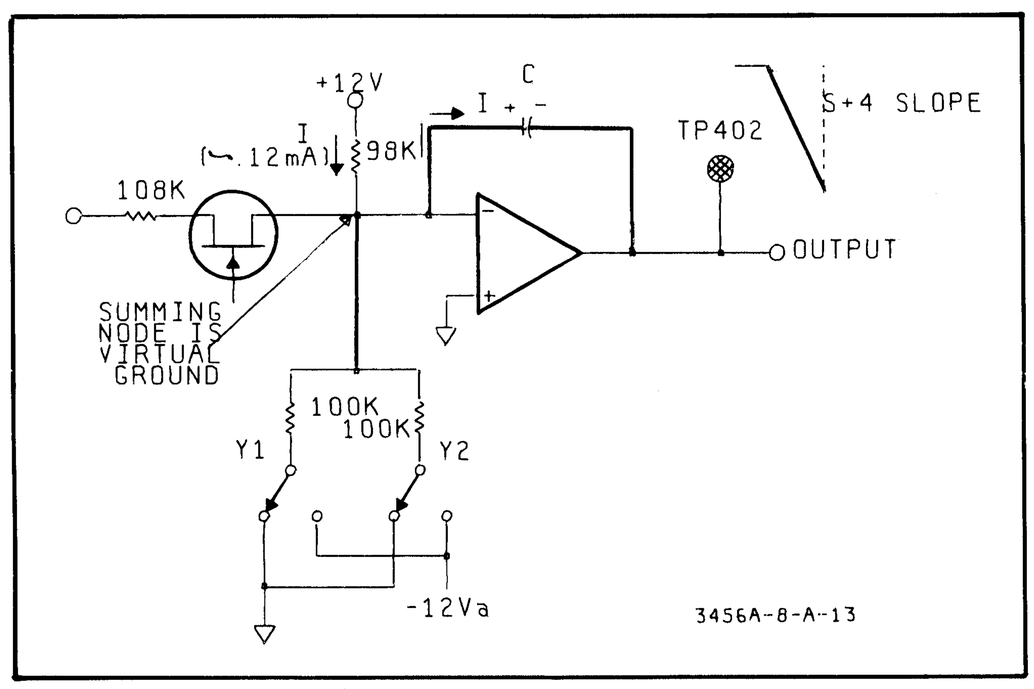

Figure 8-13. Simplified Schematic Of S+4 Slope Generation Circuit.

8-62. The lower ends of the Y1 and Y2 circuit paths are switched to − 12 Va to generate an S − 4 slope (see Figure 8-14). There is now a 50 k ohm resistance path between − 12 Va and the integrator's summing node. Current flow from the summing node through the Y1/Y2 circuit path is now twice (.24 mA) that supplied by the + 12 V supply (to maintain the lower end of the 98 k ohm resistor at ground potential). The remainder of the current is drawn from the integrator capacitor as shown in Figure 8-14. A positive going ramp (S-4) is generated for this circuit condition.

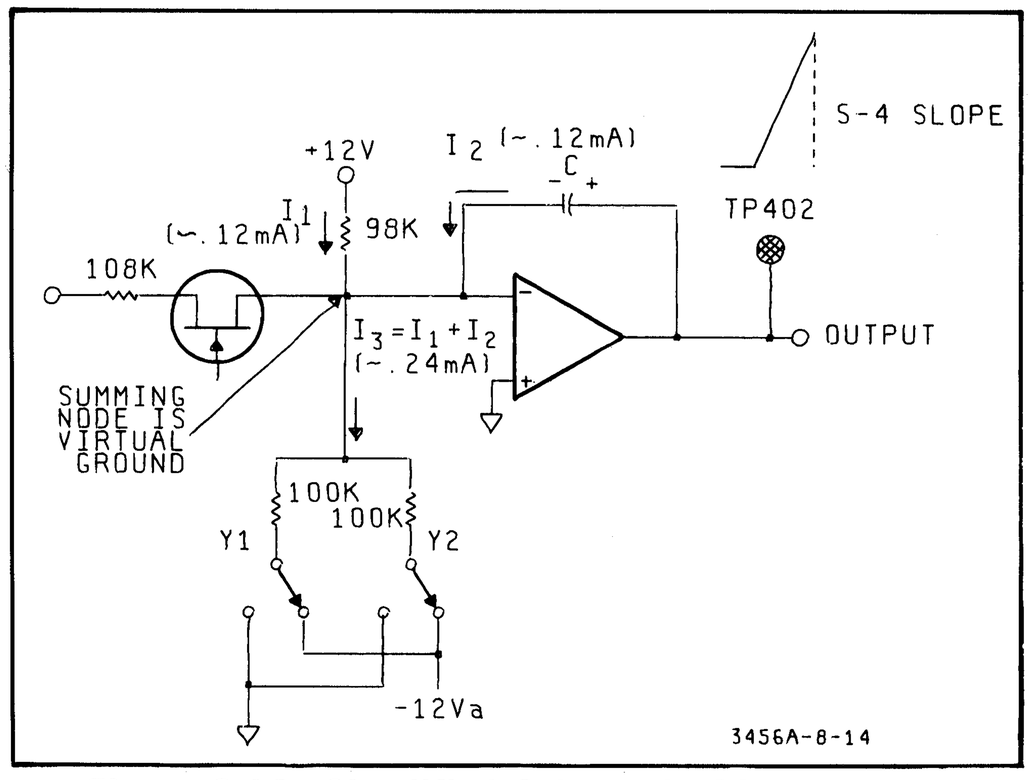

Figure 8-14. Simplified Schematic Of S−4 Slope Generation Circuit.

8-63. Slope Generation With Input Signal Applied. Figure 8-15 illustrates the circuit currents for − 10 V and − 5 V input signals (applied to the A/D Converter) for an S + 4 slope. A S + 0 is turned on during the T1 time period. This allows the integrator capacitor to charge up as a result of just the input. Consequently at the beginning of the T2 time period, the integrator capacitor will be charged to a level and polarity based on the input signal amplitude and polarity. The negative going S + 4 slope reduces (discharges) the initial charge on the integrator capacitor at a slower rate for the − 10 V input (29 μA) than it does for the − 5 V input (76 μA). Figure 8-15 shows that 122 μA is applied to the summing node (virtual ground) from the + 12 V supply. With the − 10 V input, 93 μA flows through the 108 k ohm resistor towards the signal source. The remaining 29 μA will reduce the integrator capacitor charge as shown by the output signal. When the input signal is − 5 V, 76 μA is used to reduce the charge on the capacitor. This accounts for the steeper slope (discharge rate).

8-64. During the T4 time period (S − 0 turned on), the integrator capacitor charge slope will again be dependent upon the input signal voltage level. Refer to Figure 8-12 for the resultant slopes when the S − 4 slope is turned on following a zero-crossing. For the S − 4 slope, the capacitor charge rate (and total charge) is the result of the current flowing towards the input voltage source and towards the − 12 Va reference supply (see Figure 8-14).

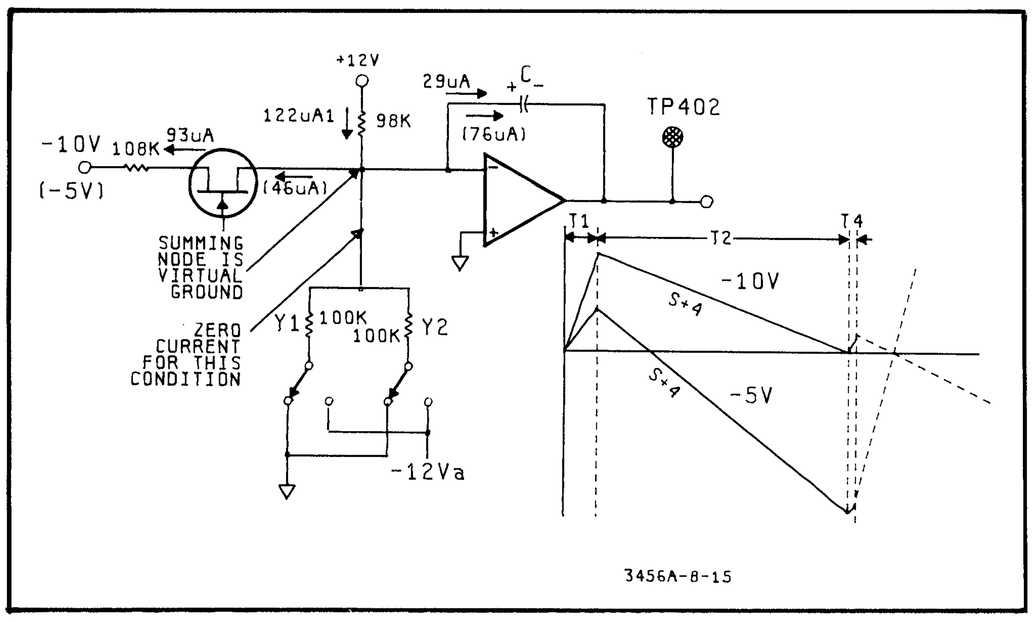

Figure 8-15. Slope Generation When Input Signal Voltage and Slope Voltage are Added.

8-65. Runup Timing. The runup timing diagram (not drawn to scale) in Figure 8-16 is for an integration time of .1 PLC (1.67 ms, 60 Hz; 2 ms, 50 Hz). The 130 A/D count integration period and the counts allowed for each S ± 4 and S ± 0 period are fixed. This pattern will remain the same for each .1 PLC measurement cycle independent of the input voltage. When the PLC integration time is changed, the first S + 0 and S ± 4 and the total A/D counts change but the time allowed for each of the remaining S ± 0 and S ± 4 remain the same (see Figure 8-17, integration time 1 PLC).

This Sequence Repeated 6 Times For .1 PLC

	S+0	S±4	S−0	S±4	S+0	S±4		S+0	S±4	S−0
A/D Counts	1.2	4	.4	10	.4	10	• • •	.4	10	
ALE's	6	20	2	50	2	50		2	50	

130 A/D Counts

Total time for S ± 4 slopes is 124 A/D counts
Total time for S ± 0 periods is 6 A/D counts
} Total of 130 A/D Counts

Figure 8-16. Runup Timing Diagram For .1 PLC.

8-66. The initial charge on the integrator capacitor occurs during the S + 0 period (1.2 A/D counts) preceeding the first S ± 4 slope (4 A/D count period). This time period is labeled T1 in Figures 8-12 and 8-15.

8-67. The duration of the initial S + 0 and S ± 4 change from 1.2 and 4 counts to 2.4 and 8 counts respectively for 1, 10, and 100 PLC settings. Figure 8-17 shows the timing for an integration time of 1 PLC. Note that the timing for .1 and 1 PLC's is identical except for the initial S + 0 and S ± 4, and the number of times the sequence is repeated. When .01 PLC is selected, a total of only 13 A/D counts is allocated for runup.

This Sequence Repeated 62 Times For 1 PLC

	S+0	S±4	S−0	S±4	S+0	S±4		S+0	S±4	S−0
A/D Counts	2.4	8	.4	10	.4	10	• • •	.4	10	
ALE's	12	40	2	50	2	50		2	50	

1300 A/D Counts

Total time for S ± 4 slopes is 1248 A/D counts
Total time for S ± 0 periods is 52 A/D counts
} Total of 1300 A/D Counts

Figure 8-17. Runup Timing Diagram For 1 PLC.

8-68. Each A/D count is equal to 5 ALE (Address Latch Enable) clock pulses. An ALE period is 2.564 microseconds for 60 Hz operation and 3.077 microseconds for 50 Hz.

8-69. Readout Digit Generation During Runup. The counter in the Inguard microprocessor (A30-U13) increments during the positive going slope periods and decrements during the negative going slope periods. The counter therefore keeps an accurate accounting of the amount of charge taken away from or added to the original positive or negative input signal voltage. When the integration time period is set for .1 or greater PLC, this counter is used to develop one or more of the most significant digits during the runup time period. This technique reduces the conversion time required after the final rundown period. Table 8-5 summarizes the digit generation for all of the integration times. A measurement value of 9.87654 is used (for illustration purposes only) to show how the measurement readout digits are developed during runup/rundown.

Table 8-5. Readout Digit Generation During Runup.

Integration Time (PLC)	Max. NR. Digits Displayed	Digits Developed During: Runup (Most Significant Digits)	Digits Developed During: Rundown (Least Significant Digits)	Integration Duration (Milliseconds): 50 Hz	Integration Duration (Milliseconds): 60 Hz
100*	6½	— —	— —	—	—
10	6½	9.87	654**	200	166.67
1	6½	9.8	7654	20	16.67
.1	5½	9.	8765	2	1.67
.01	4½	— —	9.876	.2	.167

* For an integration setting of 100 PLC, the digitally derived average of ten successive 10 PLC readings is used.

** During 10 PLC, four digits are developed during rundown with the least significant digit being rounded off.

8-70. Rundown.

8-71. As shown in Table 8-5, the Multi-Slope II rundown technique is responsible for generating the four least significant digits. This is done by measuring the remaining voltage on the integrator after runup.

8-72. Rundown uses four different slopes to achieve highly accurate measurements of the residual voltage within a short time. The first slope (called S+4) is the steepest and it continues for an integer number of A/D counts. After the slope has crossed zero S−3, which is exactly a decade less in steepness, is applied (see Figure 8-18). After S−3 crosses zero, S+2 (1/100 S+4 slope) is applied and after this crosses zero, S−1 (1/1000 S+4 slope) is applied. The time duration of each slope is counted sequentially, with that count subsequently being stored in memory, to develop the least significant digits during rundown.

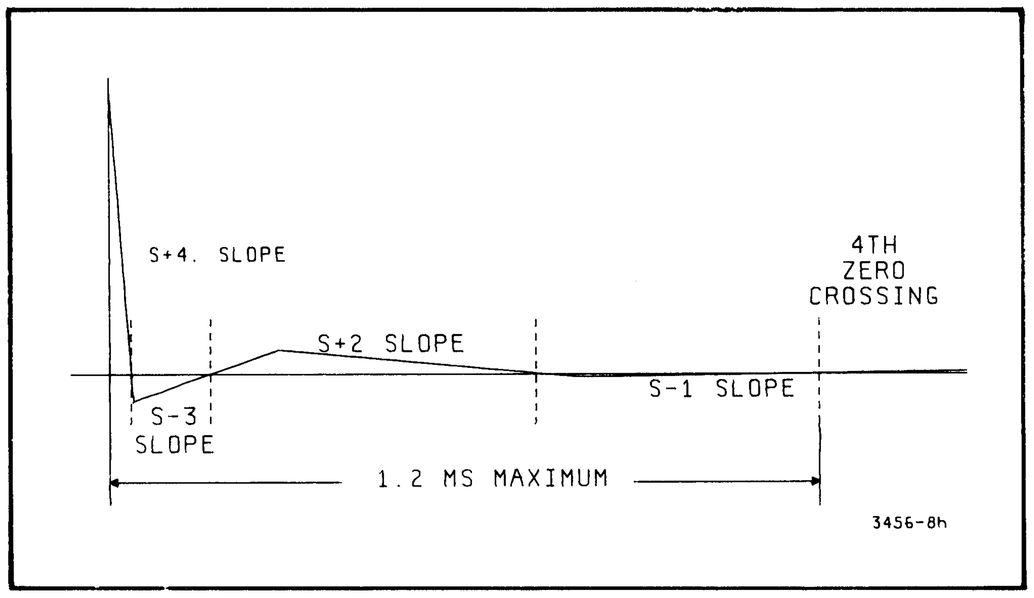

Figure 8-18. Multi-Slope II Rundown.

8-73. Rundown Timing Chart. Figure 8-19 is a timing chart that illustrates the order in which the rundown slopes are generated and the duration of each slope.

8-74. At the beginning of each rundown sequence, either an S+4 or S−4 slope is applied to the integrator voltage for a set time period (10 A/D counts, see Figures 8-19 and 8-20). The selected slope reduces the integrator voltage level so that zero-crossing is assured during the following S±4 rundown sequence. The actual rundown counting does not start until the following S−4 slope is turned on but these 10 A/D counts are included when the final measurement value is determined.

*	*	*	*	*	*	
S+4 or S−4	S−4	S+4	S−3	S+2	S−1	
10	** 2 or 12	** 12 or 2	*** 16	*** 17	*** 18	A/D Counts

*S+0 period (Dead Time, Inguard Logic stops counting during S+0 periods)

**Maximum of either 2 or 12 A/D counts allowed

***Maximum counts allowed

Figure 8-19. Rundown Timing Chart.

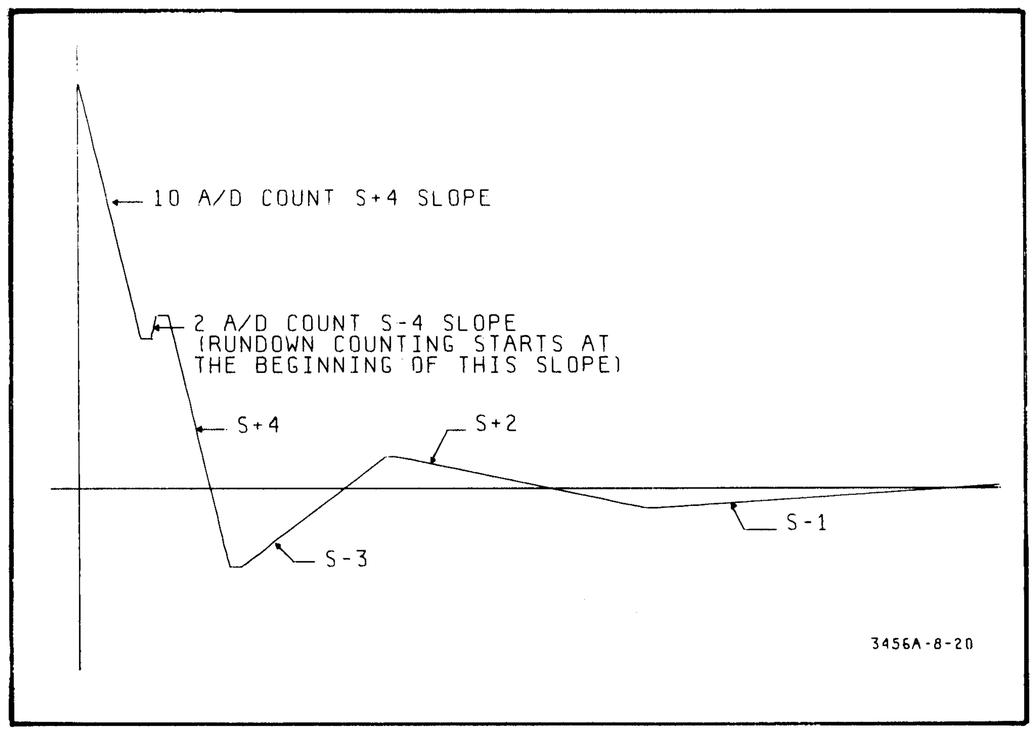

Figure 8-20. S+4 and S−4 Rundown Slopes.

8-75. Rundown Slope Sequence. Refer to Figure 8-21 for the following discussion. Rundown always starts with an S−4 slope which can last for either a maximum of 2 A/D counts or a maximum of 12 A/D counts depending on the polarity of the integrator output voltage. When the voltage is positive at the integrator's output (TP402) at the beginning of rundown, the positive going S−4 slope is going away from rather than going towards zero. When this condition is sensed by the Inguard Logic circuits, the S−4 slope is terminated—this termination occurs within 2 A/D counts after the S−4 slope is started. At this time, Inguard Logic lets an S+0 period pass through and then (after S+0 period) sends the command for an S+4 slope. This S+4 slope can last for a period of up to 12 A/D counts but stops when the first A/D count occurs after zero-crossing.

8-76. When the voltage is negative at TP402 at the start of rundown, the direction of the positive going S−4 slope is reversed after zero-crossing occurs. This is accomplished within 2 A/D counts after zero-crossing by applying an S+4 slope to reverse the slope direction as shown in Figure 8-21.

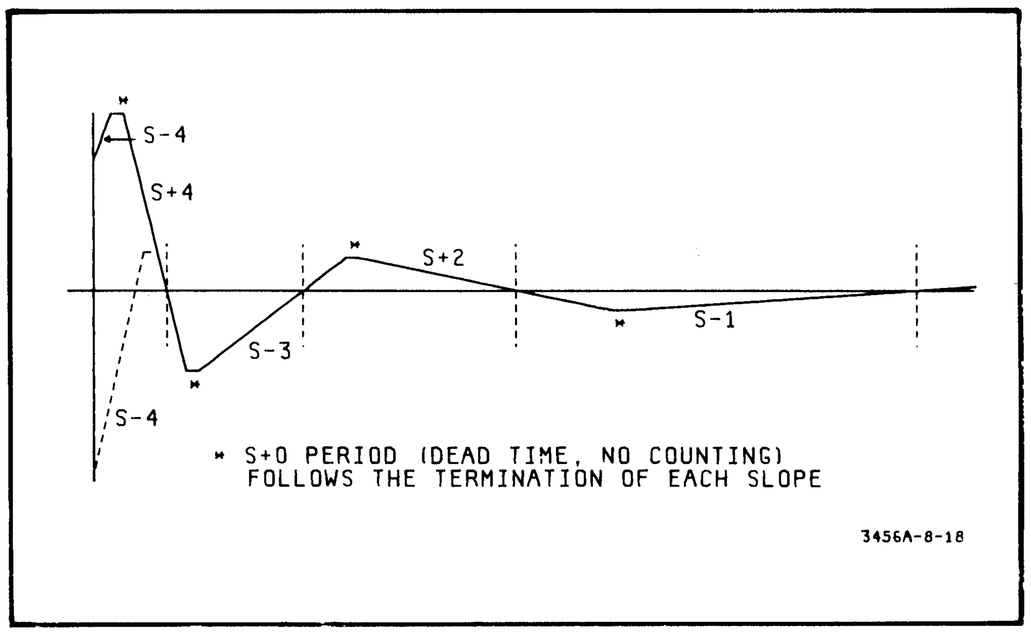

Figure 8-21. Rundown Slopes.

8-77. S−3, S+2, and S−1 Slopes. The final three slopes that follow the S±4 slopes always cross zero in the direction shown in Figure 8-21. This is done for two reasons: to optimize the S−3, S+2, S−1 slope switch circuit design by minimizing the number of switch circuits required, and to eliminate measurement errors that may be introduced during the S−1 slope because of the zero detecting comparator's hystersis. It is during this final S−1 slope (most critical zero-crossing period) that the least significant digit is developed.

8-78. Slope Generation. Table 8-6 lists the switch (resistor) modes and the type of slope (ramp) that is generated for each. Refer to the Simplified A/D Converter Schematic (Figure 8-26) to further understand this table. Note that the S+0 and the A/D-Autozero periods are identical.

Table 8-6. Slope Generation.

y1	y2	y3	y4	y5	Type Slope
GND	GND	GND	−12V	GND	S+4
−12V	−12V	GND	−12V	GND	S−4
−12V	GND	−12V	−12V	GND	S−3
−12V	GND	GND	GND	GND	S+2
−12V	GND	GND	−12V	−12V	S−1
GND	−12V	GND	−12V	GND	S−0
−12V	GND	GND	−12V	GND	S+0 & A/D-Autozero

8-79. 12 Volt Reference and A/D Autozero. The slope circuits use a −12 V_a reference voltage and a +12 V reference voltage (see Figure 8-26). The −12 V_a reference has excellent short and long term stability. The +12 V reference only needs short-term stability because of the A/D Autozero circuit that operates between every measurement cycle. Any +12 V reference errors are stored on the Autozero capacitor C411 (when Fet switch Q408 is closed) as an offset voltage. This offset voltage is subtracted during the A/D measurement cycle.

8-80. Waveform Composite (Runup and Rundown). Figures 8-22, 8-23, and 8-24 show the waveforms for complete measurment cycles—runup and rundown. Figure 8-22 is for a −5 V input (.1 PLC) with the front panel Autozero disabled. The small positive excursion preceding the four larger excursions is due to the initial integrator charge-up (T1 in Figure 8-12).

8-81. Figure 8-23 is the waveform for the same −5 V input (.1 PLC) with the front panel Autozero enabled. The dc offset of the Input Amplifier is being measured during the second half of this waveform sequence. This offset voltage is very low and consequently the waveform resembles that for a zero volt input. A complete runup and rundown is done on this offset voltage.

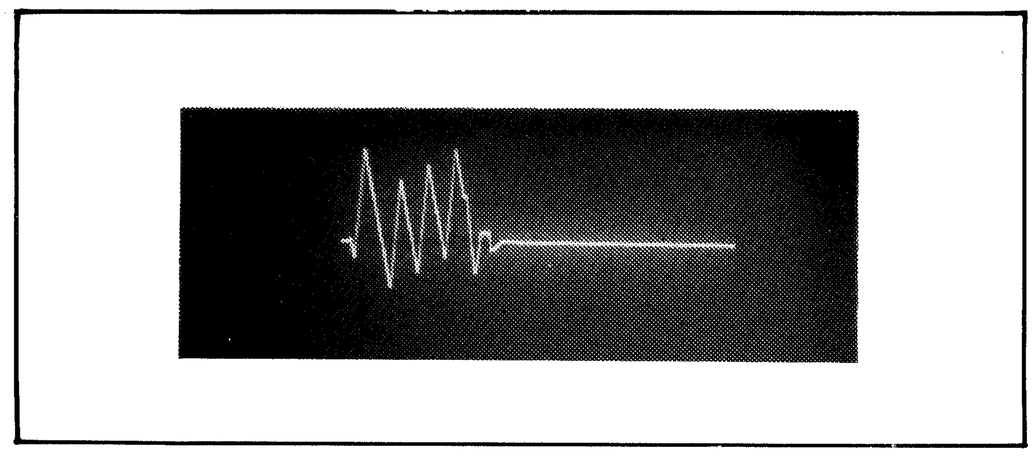

Figure 8-22. A/D Converter Waveform for −5V Input, Autozero Disabled.

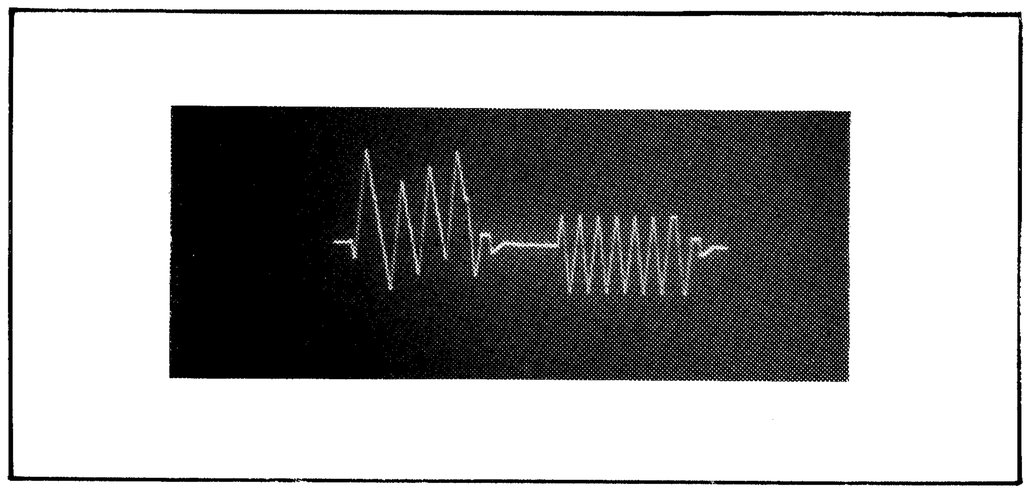

Figure 8-23. A/D Converter Waveform for −5V Input, Autozero Enabled.

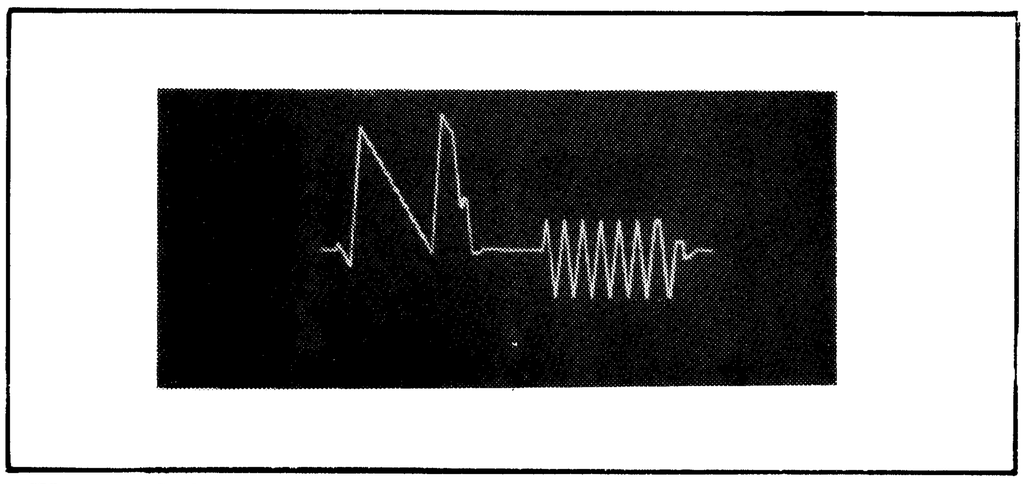

Figure 8-24. A/D Converter Waveform for −10V Input, Autozero Enabled.

8-82. Figure 8-24 is the waveform for a −10V (full-scale) input (.1 PLC) with the front panel Autozero enabled. Fewer zero-crossings occur when the input voltage is increased because the S+4 slope angle is less steep. This is due to the interaction of the higher input voltage with the reference voltage as explained in Paragraph 8-63 and Figure 8-15.

8-83. A/D Converter Circuit Description.

8-84. A/D Converter Input Circuit. Refer to Figure 8-26 Simplified Schematic for the A/D Converter and to Schematic **4**, A/D Converter Schematic, for the following circuit descriptions. The input signal to the A/D Converter passes through J29 before it is applied to the input switch FET's. J29 is a three position jumper/plug that has a +5V and gnd position (both used for testing) is addition to the RUN (normal) position. The input runup switch FET's, Q402 and Q403, are closed during the runup integration sequence and open (breaks input signal path) during the rundown sequence. These Fet's

are in parallel to minimize the input resistance. During those time periods when the input runup FET's are open, FET switch Q404 grounds the input to prevent the gates of Q402 and Q403 from becoming forward biased. When Q402/Q403 are open, FET Q405 switches in R405 to maintain the A/D Converter input impedance during rundown. The FET switches are open when their gates are low (−12V from pin 2 of U401) and closed when their gates are high (approximately gnd). Capacitor C402 provides filtering for the FET generated switching transients. Resistor R404 and R403 provide linearity "fine-tuning".

8-85. Integrator Circuit. Refer to Figure 8-26 Simplified A/D converter Schematic. The Integrator circuit consists of Q406, U405, C403, and the resistor/switch network that is connected between −12Va, ground, and +12V. The S−1 to S±4 current paths are switched in a prescribed manner to charge or discharge the integrator capacitor C403. Table 8-6 lists the integrator output slopes or ramps (at TP402) and the current paths that are switched to generate these slopes. For an example of the integrator operation refer to Paragraph 8-63.

8-86. Slope Control Circuits. The coded slope control signals (HSA, HSB, and HSC) and the Low Run Up (LRU) from the Inguard Logic circuits are inverted and level shifted (from "0V to 5V" logic to "−12V to 0V" logic) by quad comparator U408. The comparators have open collector output transistor stages that are referenced to ground by 10 K ohm pull-up resistors. The output level of the comparators will be −12 V when the input signals are +5 (logic high) and be ground when the input signals are at ground (logic low).

8-87. Integrated circuit U404 decodes the slope signals from the outputs of the HSA, HSB, and HSC comparator stages. The "exclusive or" stages between U404 and U401 (hex latch) provide further decoding. CMOS is used for the U402 inverter stages because CMOS provides a low impedance path to either −12 V or ground. The CMOS stages are connected in parallel to lower the resistance for the steeper S±4 slopes. Note that −12 Va, the most stable reference voltage, is used for the U402 inverters and that −12 Vb, a buffered version of −12 Va, is used for the less critical stages.

8-88. The switching circuits shown in the simplified schematic are the U402 inverters whose outputs switch between −12 Va and gnd. The resistors in U500 (.01% fine-line resistor package) are the resistors in the simplified schematic that are connected between the switches, the +12 V, and the integrator' input.

8-89. As mentioned earlier, the LRU signal from Inguard Logic is inverted (HRU) and level shifted by a U408 comparator stage. HRU passes through hex latch U401 and is then applied to Fet switches Q402 and Q403 in the integrator's input circuit. HRU is inverted by U407a and applied to Fet switches Q404 and Q405 so that they will be closed when Q402 and Q403 are open and vice versa.

8-90. The ALE clock pulses from the Inguard Logic are level-shifted from "0 to 5 V" logic to "−12 V to 0 V" logic by Q401. The ALE clock pulses are used by the U401 latch stage to accurately control the start and stop times of each slope. Refer to the Inguard Logic Theory of Operation for a detailed discussion of the ALE clock and other A/D Converter timing requirements.

8-91. Analog Overload Detection Circuit. The Analog Overload Detection Circuit, consisting of comparator stages U409a, c, and d, is connected to the output of the integrator. This circuit detects when the A/D Converter's input exceeds either +12.4 V or −12.4 V (i.e. 124% of full scale). The voltage on the integrator capacitor is due to the combined charge currents from the applied slope (S+4 or S−4) and the input voltage. When the input voltage exceeds 124%, the integrator output voltage reaches the trip voltage during runup when the polarities of the applied slope voltage and the input voltage are the same—charge currents are aiding at this time. This occurs within the first few 10 A/D count periods during the runup sequence.

8-92. The output of U409a (LOVL) will go low when the output of either U409c or U409d goes low. U409c senses a negative overload voltage at the integrator's output which would be due to a positive overload voltage at the A/D Converter's input. U409d senses a positive overload voltage at the integrator's output. Capacitor C410 provides a delay that will hold the overload logic level long enough to assure that the Inguard microprocessor senses it during its normal routine.

8-93. When an analog overload is sensed during the integration runup period, the logic low present on the LOVL line going to the Inguard Circuits causes the following: Measurement cycle is halted (LRU goes high); Fet switches Q402 and Q403 open (at A/D Converter's input); Complete rundown sequence is initiated to normalize the integrator circuit; Upranging (done by Outguard Circuits) occurs if Autorange is enabled. Then another measurement cycle is started.

8-94. Digital Overload. A digital overload occurs after a measurement cycle is completed if the numbers to be converted for display are too large for the selected measurement range. When the value exceed 120% of full scale, the Outguard Logic senses this digital overload condition and outputs the code for an "OL" to be displayed on the front panel. Note the dynamic range differences—120% for digital overload; 124% for analog overload. That extra 4% is needed by the A/D Converter for Autozero measurements. Recall that two measurements are taken when Autozero is enabled. The first measurement is the Input Amplifier offset voltage, which is subtracted from the second measurement after it is taken. The second measurement is therefore the in-

put signal magnitude plus the offset value, hence the requirement for that additional dynamic range.

8-95. Slope Amplifier U406. The slope amplifier is an inverting amplifier with a gain of 100 for the low level signals near zero volts. This amplifier increases the sensitivity of those signals to more accurately detect zero-crossing. Diodes CR402 and CR403 clamp the output of U406 to ± .6 V to prevent saturation. This speeds up the slope conversion process. The output of the slope amplifier is fed to the U409b comparator stage and to Q408 in the A/D autozero circuit.

8-96. Zero Comparator (U409b). Comparator U409b has an open collector output (HCP—High Compare) that is either +5 V or zero volts. This stage compares the integrator's output to ground. The comparator's output is off when its positive input terminal (pin 7) is above ground. The open collector output rises (via pull-up resistor R430) to +5 V at this time. U409's output changes state immediately (+5 V to zero volts) when the signal at pin 7 goes negative.

8-97. A/D Autozero. The A/D autozero should not be confused with the Autozero that can be enabled/disabled with the front panel Autozero button. Autozero compensates for Input Amplifier offsets. A/D autozero, which canot be switched off, occurs between every A/D Converter measurement cycle to compensate for any +12 V reference errors (see Paragraph 8-79).

8-98. The output of slope amplifier U406 appears at the source of the A/D autozero FET switch (Q408). The autozero capcitor C411, charges to the voltage level appearing at the output of U406 when Q408 is closed. The voltage stored on C411 is fed to Q407a and b, a divide by 30 amplifier. The output of Q407a and b is applied to the integrator stage during the next measurement.

8-99. Jumpers JMPR 401, 402, 403, 506, and 507 are provided for troubleshooting aids if a power supply is loaded down. JMPR's 401 and 402 are located directly underneath the U500 fine-line package. JMPR's 506 and 507 are located in the 12 V reference section adjacent to JMPR 403.

8-100. The voltage divider, made up of R431 and R423, provides the +2 V reference for the comparators. Voltage divider R432 and R433 provide a voltage source for the 5 V logic signature analysis (SA) equipment when it is used to check the 12 volt logic in the A/D Converter.

8-101. 12 VOLT REFERENCE.

8-102. General.

8-103. The 3456's ability to make precise measurements depends on the long term and short term stability of the reference supplies. The reference supplies consist of those 500 series numbered components in the small reference section on the A20 board and two other components (variable resistor R614 and Switch S601) that are physically located in the calibration section.

8-104. Two types of plug-in reference boards are available. These boards (A24 and A25) are interchangeable (with resistor change) and provide the short and long-term stability required.

8-105. The fine-line resistors (U500—dotted box around resistors) are accurate, temperature-tracking, matched resistors. The two reference boards require a different resistor between pins 17 and 19 of the fine-line resistor package. Consequently the fine-line package must be changed if the reference board is changed from an A24 to an A25 and vice versa. Refer to schematics 5A and 5B (Reference Board Schematics) and Figure C3 in Appendix C for details. The fine-line resistor packages and the reference boards are not field serviceable.

8-106. Circuit Description.

8-107. As shown on the Simplified Schematic 8-27, $-12\ V_a$ is used only in those circuits requiring a very stable and precise −12 volts. The $-12\ V_b$ is used for the less critical stages of the A/D Converter and as a reference for the AC Converter. The +12 V source has good short term stability.

8-108. The zener diode voltage reference on both the A24 (U503) and A25 (U500) boards have internal heaters to provide as near constant a temperature as possible for output voltage stability. U503 on the A24 board has a zener output voltage (pin 3 of U503) specification range of 5.82-6.06 volts. U500 on the A25 board has a zener output voltage (pin 2 of U500) specification range of 6.8-7.1 volts.

8-109. Buffer Q501 lowers the output impedance of op amp U501 so that transients generated by the A/D CMOS circuits will not cause regulation problems. The base of Q501 should be approximately −12.7 V (output of U501) which is reduced to −12 V by the base-emitter junction of Q501.

8-110. The effective feed-back resistance established by fine-line U500, J26, J27, J28, S601, and R614 provide the range needed for the course and fine adjustment of the $-12\ V_a$ reference voltage. The jumpers associated with J26, J27, and J28 are positioned for either −12 V or ground for the initial rough calibration. These jumpers should not be changed unless a reference board, fine-line package, or Q501 is changed. A 16 position rotary switch (S601) and a trimpot (R614) are used for the final front panel calibration. S601 (screwdriver adjustable) is shown in its "0" position but will normally be positioned between 6 and 8 on the dial during calibration. This initial calibration position should be adequate for a 5-10 year period. Refer to Figure 25 for a pin configuration and truth table for S601.

Pin Configuration Schematic (Position 0)

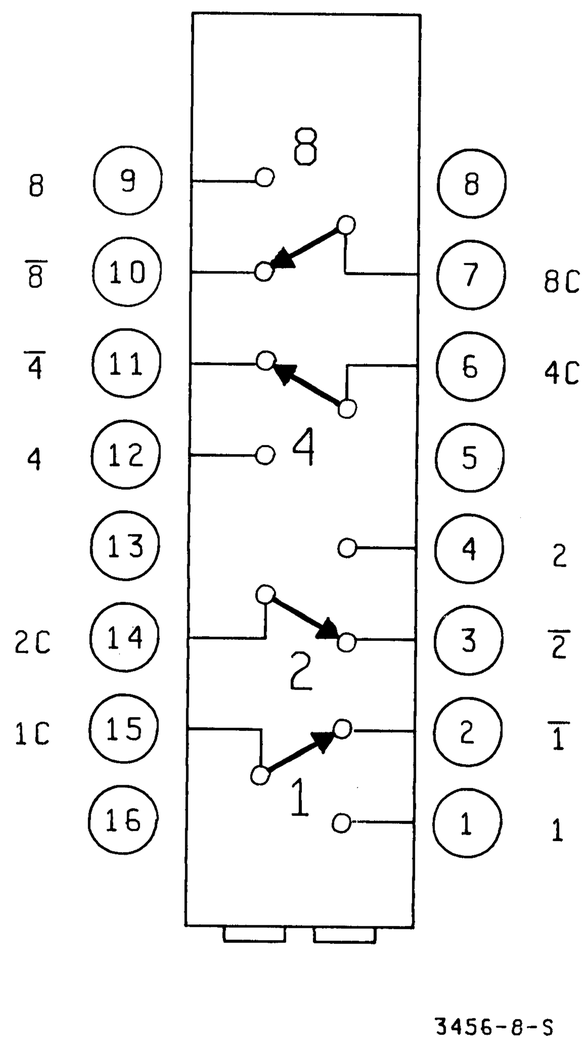

Truth Table (BCD and BCD Complement)

Switch Position	−12 Va				Ground			
	8	4	2	1	$\overline{8}$	$\overline{4}$	$\overline{2}$	$\overline{1}$
0					•	•	•	•
1				•	•	•	•	
2			•		•	•		•
3			•	•	•	•		
4		•			•		•	•
5		•		•	•		•	
6		•	•		•			•
7		•	•	•	•			
8	•					•	•	•
9	•			•		•	•	
A	•		•			•		•
B	•		•	•		•		
C	•	•					•	•
D	•	•		•			•	
E	•	•	•					•
F	•	•	•	•				

• = Connection

Figure 8-25. S601 Data.

8-111. JMPR 501 and 502 shown in the non-inverting terminal of op amp U505 provide for fine adjustment of the +12 V. JMPR 503-507 are provided for troubleshooting aids if a power supply is loaded down.

8-112. OHMS MEASUREMENTS.

8-113. General.

8-114. The Ohm's Current Source in the 3456A supplies a dc reference current to the unknown resistance during resistance measurements. The resulting dc voltage drop is proportional to the value of the current and unknown resistance. This dc voltage is measured in a manner similar to that used for the DCV function: by using the Input Switching, the Input Amplifier, and the A/D Converter. Since the current source is a current sink, the dc voltage drop is negative. The Outguard Logic changes the reading polarity to obtain a positive front panel ohms reading.

8-115. The FET switches in the Input Switching provide for either the 2-wire or the 4-wire measurement method. The front panel display shows a negative resistance if the 4-wire connections are reversed or the circuit under test has enough offset voltage to give incorrect resistance readings.

8-116. Circuit Description.

8-117. General. Refer to Figure 8-28, Simplified Ohm's Current Source Schematic, and to schematic **2**, Ohm's Current Source, for the following circuit description. The current source may be divided into three major section: Reference Voltage, Current Regulator, and High Voltage Protection.

8-118. Reference Voltage Section. The voltage regulator is an inverting amplifier that has a near-zero volt input. The voltage divider (fine-line resistors) between the −12 volt reference and ground provides a stable −5.5 voltage reference for U204's positive input terminal. The feedback path for U204 maintains an output voltage near −13 volts.

8-119. Calibration components bias the inverting amplifier's input slightly above ground. This provides a range dependent fine adjustment for the −13 V reference voltage.

8-120. Current Regulator. The positive terminal of U205 senses via FET switch Q201 or Q202 the voltage (−5.5 V or −9.25 V reference voltage respectively) present on U204's feedback path. U205 controls a current regulating FET to obtain the same voltage on its negative terminal as that appearing its positive terminal.

8-121. For a 1 K ohm range measurement, FET switch Q209 is on. At this time 1 mA of current flows through the 7.5 K ohm fine-line reference resistor to drop the −13 volt reference to a −5.5 V level. This −5.5 V is sensed through those high value resistors (no current flow in these resistors) in the circuit path going to the negative input of U205. If this voltage is either higher or lower than the −5.5 V reference voltage appearing at U205's positive input, U205 drives the current regulating FET U209 for a precise 1 mA level.

8-122. When relay K101 is open (i.e. not in ohms function), current flow is still maintained to satisfy U205. This flow is through the gate-source of the current regulating FET's.

8-123. Current Regulating FET's Q203, Q205, Q208, and Q209. The four current regulating FET's are biased either on (by U205) or off (by a comparator) to select the proper fine-line resistor current path for the selected current range. The comparators have open-collector transistor output stages that float to the output level of U205 when the comparator output is off (logic high at comparator's input)—the FET is on at this time. When the comparator's output is on (logic low input), the comparator outputs a −18 V level that will bias off (open) the associated current regulating FET.

8-124. Range Switching. The Range and Function Control Logic, which is actually an extension of the Inguard Controller, provides the high (5 V) and the low (ground) logic levels for the comparator/FET range switching circuits. Table 8-7 lists the FET's status, logic levels to the comparators, etc. for all ohms ranges.

8-125. Note that FET switch Q203 is used for 10 M, 100 M and 1 G ohm ranges. When either the 100 M or 1 G range is selected, relay K102 in the Input Switching will close connecting the 10 M ohm high-voltage divider (fine-line) in parallel with the resistance being measured. FET switch Q109 will be open at this time. Rx, the unknown resistance, is calculated by the Outguard Logic for these two ranges. Also note on Table 8-7 that both FET switches Q204 and Q206 are open for the 10 M ohm and above range and closed for the lower ranges. These switches reduce the error in the sensed voltage due to the bias currents flowing through the 6.75 and 6.81 M ohm resistors. Resistor R218 (connected across Q206) is an impedance matching resistor used to reduce the bias current error for the 10 M ohm and higher ranges.

8-126. Comparator stages U202a and U202b control FET switches Q202 and Q201 respectively. When HA2 is high (100 K ohm and higher ranges), Q202 is closed and Q201 is open. When HA2 is low (10 K ohm and lower ranges), Q201 is closed and Q202 is open.

8-127. Gate Bias Amplifier. Gate Bias Amplifier U203 provides a voltage level of either a −5.5 V or a −9.25 V. This voltage is used to bias the FET gates of Q201, 202, 204, and 206 when the driving comparator's output is off.

8-128. High Voltage Protection. The highest voltage across the input terminals for ohms measurement is approximately −5 V. If a positive or more negative voltage is inadvertently applied by the user, the High Voltage Protection circuit will protect the Ohm's Current Source components. Fuse F201 (62 mA) and gas discharge tube E201 (400 V) provide protection for voltages above 400 V. Diode CR202 provides protection against negative voltages that are less in magnitude than 400 V. For positive voltages less than 400 V diode CR201 is forward biased. This diode junction voltage drop (.7 V) is applied to the base of Q211 whose emitter will be at 0 V. Since this voltage is applied to the base of Q210, the emitter will be at −.7 V. Therefore the positive voltage will be across the emitter-collector junction of Q210.

Table 8-7. Ohms Current Source.

Range	U205 Pos. Term.	Range FET Switch Closed		Current Through Unknown	Voltage At K101 (Full Scale)	Input Amplifier Gain	Logic Inputs To Associated Comparators
100 Ω	5.5 V	Q209	**	1 mA	−.1 V	100	H4
1 K Ω	5.5 V	Q209	**	1 mA	−1 V	10	H4
10 KΩ	5.5 V	Q208	**	100 μA	−1 V	10	H3
100 KΩ	9.25 V	Q208	**	50 μA	−5 V	2	H3, HA2
1 MΩ	9.25 V	Q205	**	5 μA	−5 V	2	H2, HA2
10 MΩ	9.25 V	Q203	***	500 nA	−5 V	2	H1, HA2
100 MΩ*	9.25 V	Q203	***	500 nA	~ −4.5 V	2	H1, HA2
1 GΩ*	9.25 V	Q203	***	500 nA	~ −4.95 V	2	H1, HA2

*Resistance calculated on these ranges.

**Q204 and Q206 closed for these ranges.

***Q204 and Q206 open for these ranges.

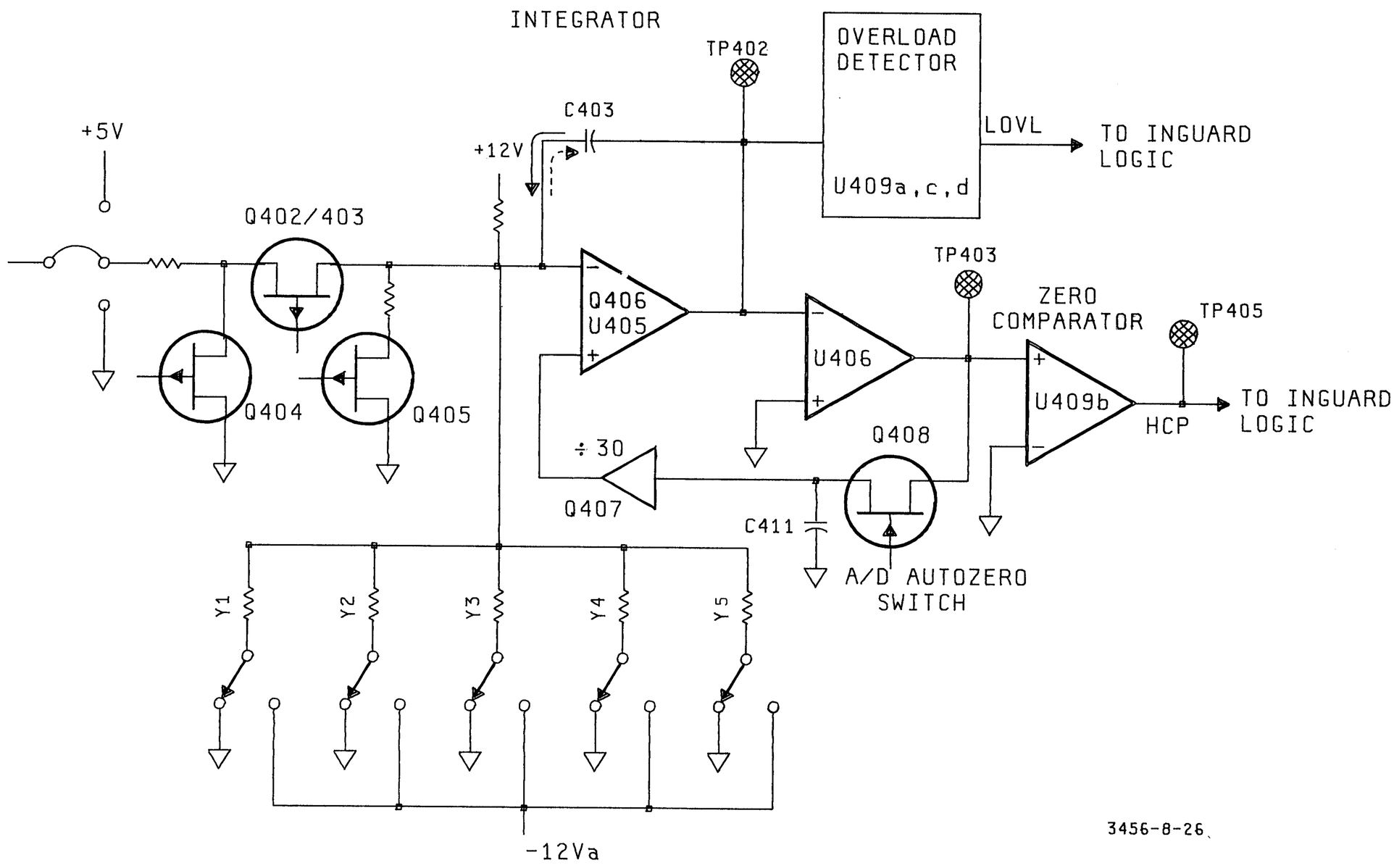

Figure 8-26. Simplified A/D Converter Schematic.

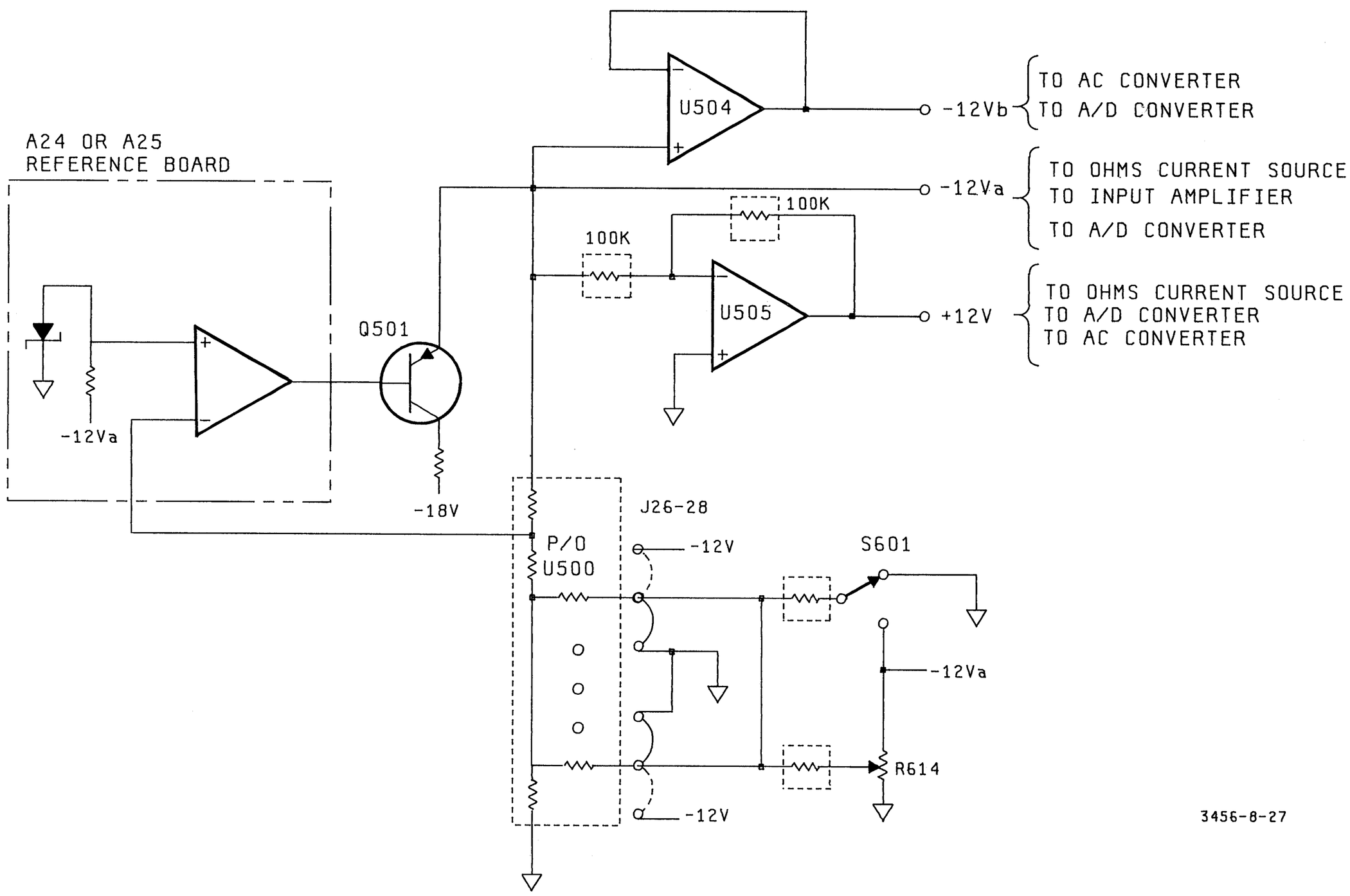

Figure 8-27. Simplified Reference Schematic.

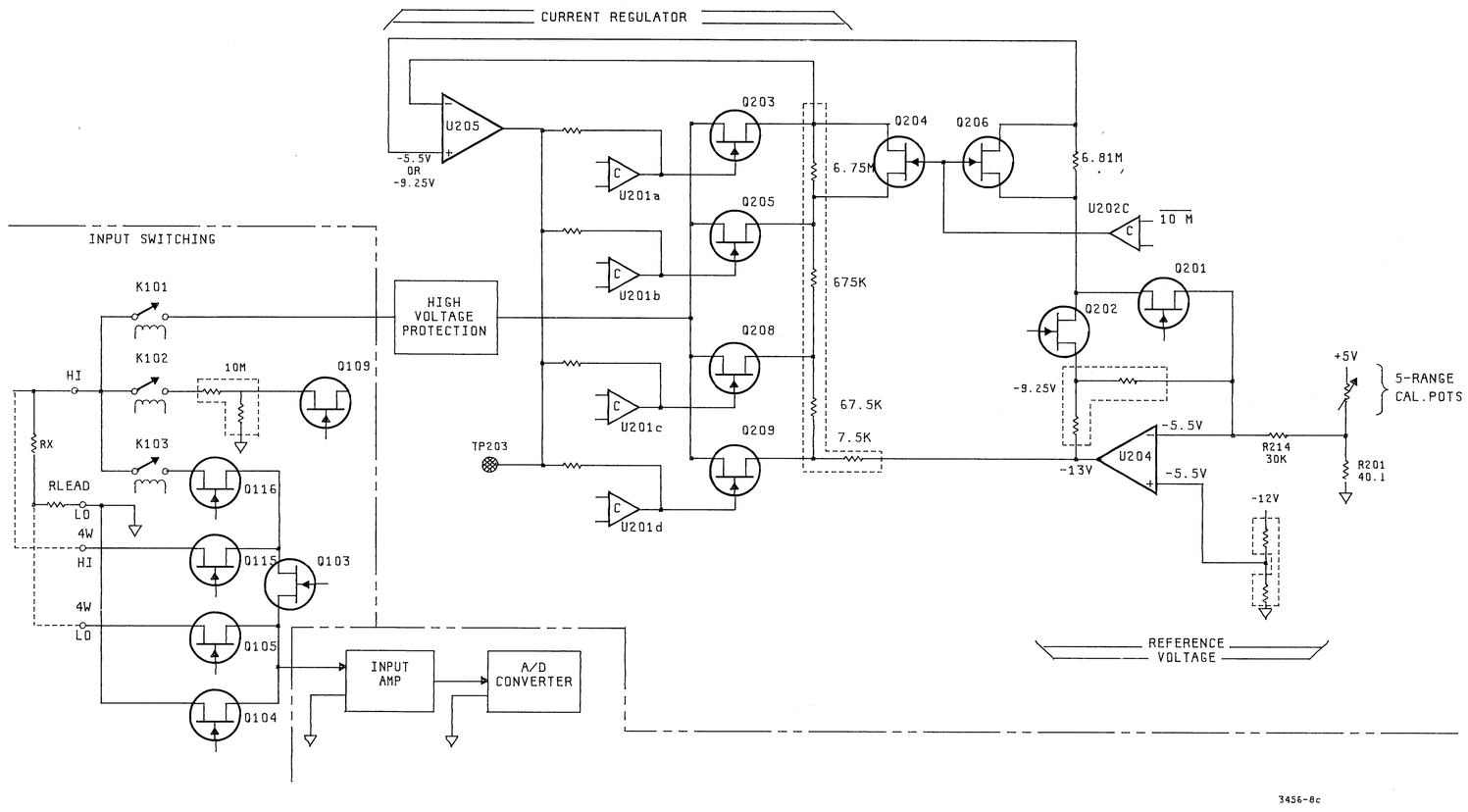

Figure 8-28. Simplified Ohm's Current Schematic.

8-129. Offset Compensated Ohms. Offset Compensated Ohms makes two measurements on the circuit connected to the input terminals. The first measurement is a convential ohms measurement. The second is the same except the current source is turned off. The second reading is subtracted from the first prior to the resistance calculation. This compensates for small offset voltages present on the external circuit. When the current source is turned off, Q207 (diode connected FET) provides a current-path between the output and the negative input of U205 so that the positive and negative input terminals can remain at the same potential.

8-130. Input Switching for Ohms Measurements. The simplified schematic shows the components in the Input Switching that complete the paths to the Input Amplifier for both the 2-wire and 4-wire ohms measurements (4-wire shown with dashed line). Relay K103 and FET switch Q116 are closed during 2-wire ohms measurements. Two-wire ohms is exactly the same as a DCV measurement except that current is supplied through the VOLTS HI and LO terminals (K101 closed).

8-131. Relay K103 and FET switch Q116 are open during 4-wire ohms measurements. At this time the VOLTS HI and the VOLTS LO terminals still supply the ohms current but floating terminals "4 WRΩ SENSE HI" and "4 WRΩ SENSE LO" are used to measure the dc voltage drop. The voltage drop across the unknown resistance and the lead resistance (R_{lead}) is measured via the "4 WRΩ SENSE HI" terminal (through FET switches Q115 and Q103). the voltage across R_{lead} may cause an incorrect reading—4 wire Ω Autozero corrects for this measurement error.

8-132. Autozero—4 WIRE OHM. When Autozero is on during a 4-wire ohms measurement, two measurement are made. The first measurement is made with Q105 closed (Input Amplifier shorted to "4 WRΩ SENSE LO" terminal) and Q103 open. This is the 4 WRΩ Autozero measurement. A second measurement is made with Q105 open and Q103 closed (measurement of 4 WRΩ SENSE HI terminal). The first measurement is then subtracted from the second by the Inguard Logic prior to sending the measurement data to the Outguard. FET Q104 is open and FET Q115 is closed at all times for both the normal and Autozero 4-wire ohms measurements. Lead resistance (R_{lead}), in addition to the dc offset of the Input Amplifier, is subtracted out during 4-wire ohms Autozero measurements.

8-133. Low Ohms Offset. Refer to schematic **3**, Input Amplifier Schematic, for the following circuit description. The Low Ohms Offset circuit alters the Input Amplifier operation to allow accurate 4-wire ohms measurements when using low ranges (10 K ohms range and below). The circuit level shifts the dc reference level at the output of the Input Amplifier.

8-134. Figure 8-29 and 8-30 illustrate how this circuit operates. The negative voltage swing at the output of the Input Amplifier is normally between 0 V and − 12 V (A). The low ohms offset circuit level shifts the dc reference at the amplifier output from 0 V to + 1.3 V (B) which increases the amplifier voltage swing range from 12 V (A) to 13.3 V (C). This is done by moving the bottom of, part of the U200 resistor divider from ground to − 12 V_a.

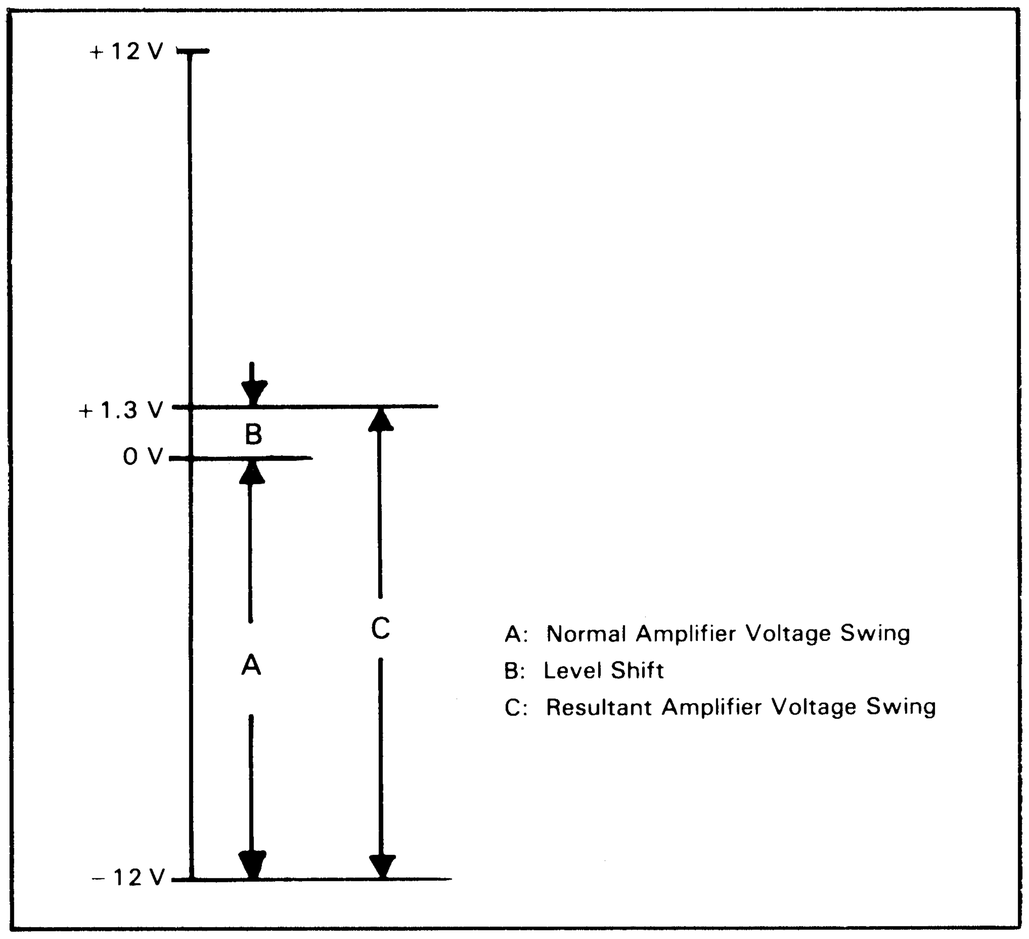

Figure 8-29. Level Shift for Low Ohms Offset Circuit.

8-135. Figure 8-30 illustrates the voltage drops that occur across R_X (.115 V) and $R_{lead\ 1}$ (.01 V) for a 100 ohm range measurement. The 4-wire ohms measurement is taken between the 4 WR Ω HI terminal (top of R_X) and the VOLTS LO terminal (ground). In this case, the voltage read is the voltage across R_X (.115 V) and $R_{lead\ 1}$ (.01 V). For the 100 ohms range, the input amplifier gain is 100. This would result in an amplifier output voltage of 12.5 V if there is no Low Ohms Offset circuit (see Figure 8-31A). This would be an A/D Converter overload condition. Figure 8-31B illustrates how this level shift increases the dynamic range to allow for lead resistance. Note that the measurement is within the A/D Converter limits. The $R_{lead\ 1}$ error (.01 V — 1.0 V after X100 gain) plus the Input Amplifier error is subtracted out during the 4-wire ohm Autozero.

8-136. The input to the positive terminal (pin 3) of comparator U301a is high (HOHM) for all of the ohms ranges. The open collector transistor in the output stage of U301a is off for this condition. The inputs of the U306 inverters are pulled to ground by R323 at this time. The resulting output of the inverters (− 12 V) is applied to pin 12 of U200. When the ohms function is not selected, HOHM is low and the output of U301a is − 18 V. The resistor network (R322 and R323) at the input of U306 divides this − 18 V down to − 12 V which is inverted to zero volts by U307.

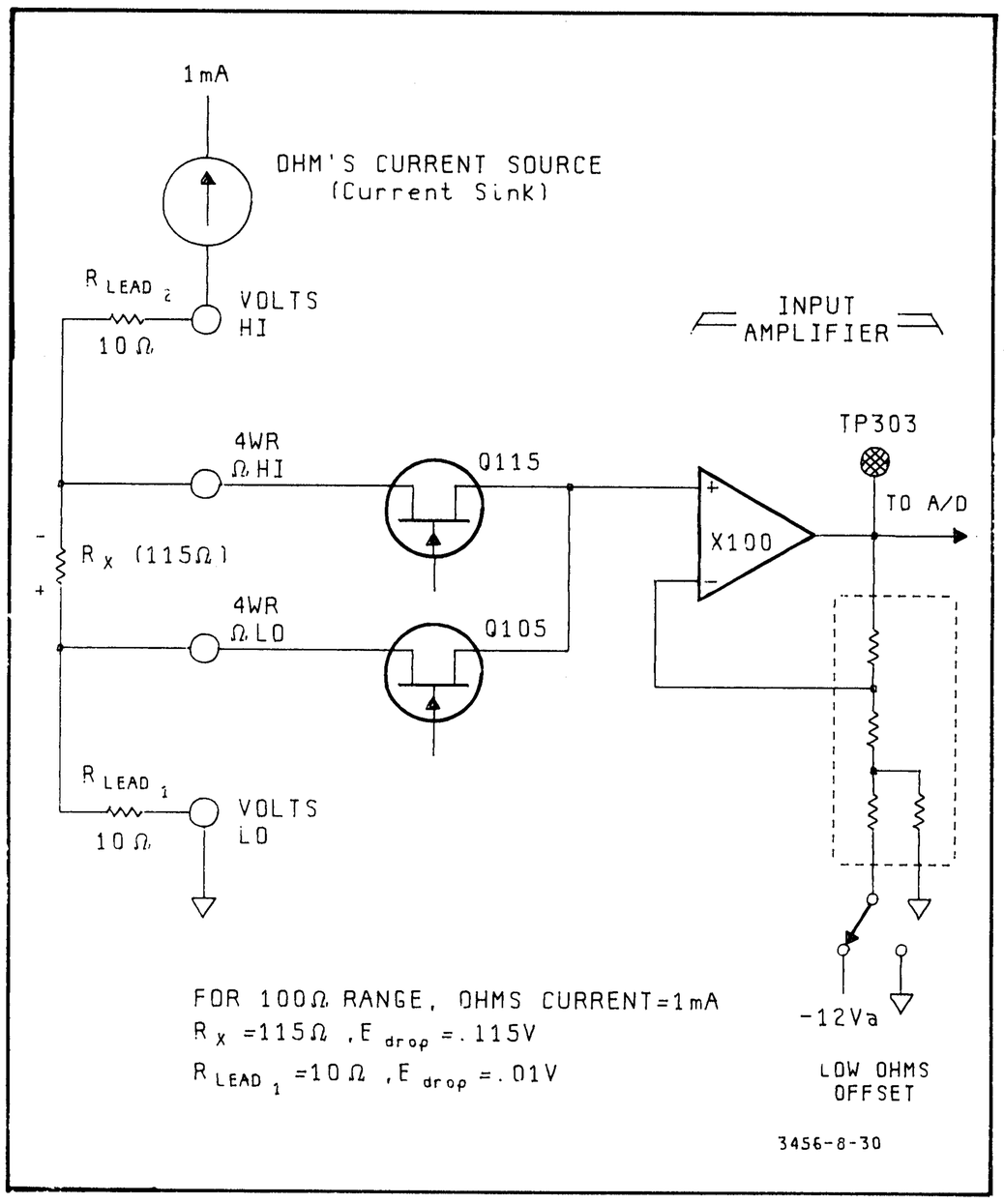

Figure 8-30. Low Ohms Offset, Circuit Operation.

8-137. The −12 V that is applied to pin 12 of U200 effects the low ohms ranges only (HA100 or HA10, gains of 100 or 10 respectively) because of the structure of U200. A different gain setting section of U200 (pins 13 and 14) is used for the high ohms ranges (HA2, gain of 2). There is no need for the Low Ohms Offset in the high ranges since the ratio of the $R_{lead\ 1}$ to R_X is insignificant.

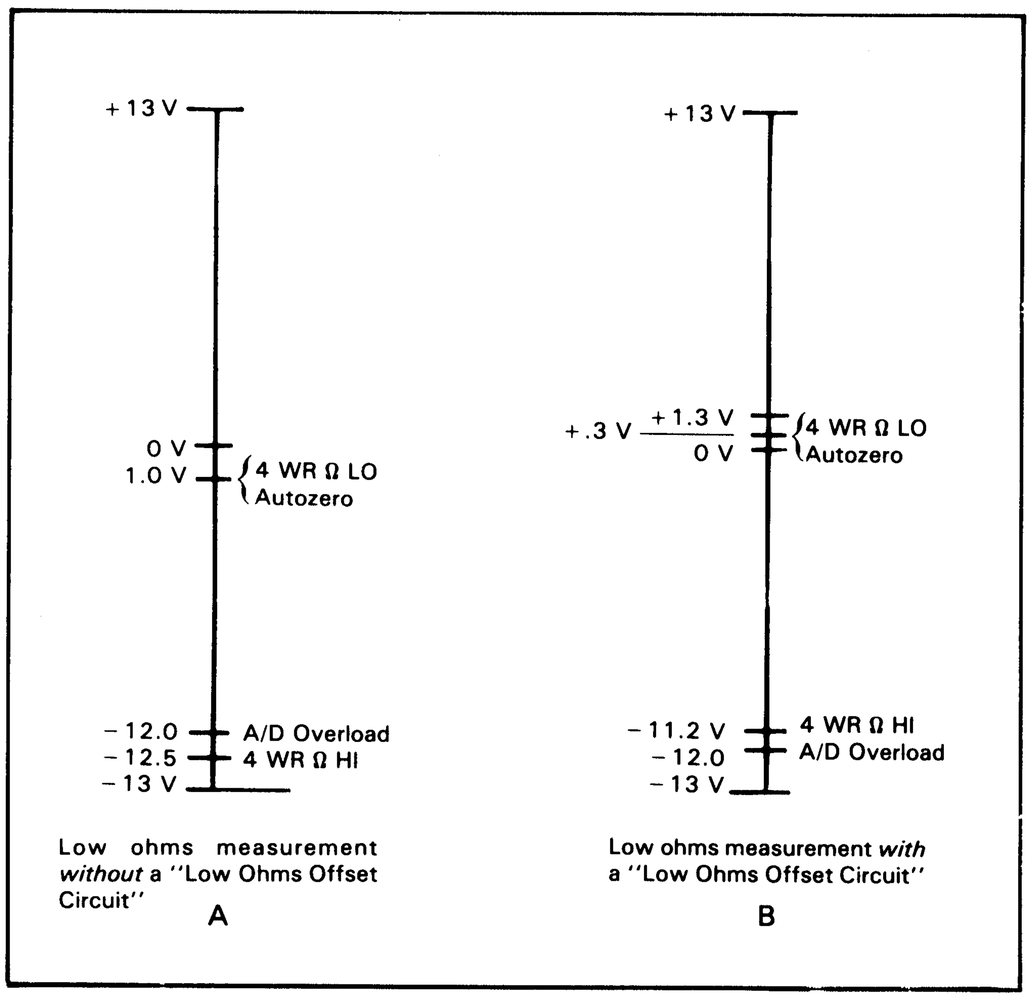

Figure 8-31. Low Ohms Offset Level Shift.

8-138. AC VOLTS MEASUREMENTS.

8-139. General.

8-140. The 3456A uses operational circuits rather than a thermal element to convert the signal being measured to a dc equivalent of its true rms value. This type of rms converter provides faster ac measurement rates and also accurate conversion.

8-141. Excluding the Front/Rear switch and high voltage protection circuits, the converter can be divided into the following three major sections: Input Attenuator and Amplifier, Absolute Value Amplifier (full-wave rectifier), and RMS Converter (see Figure 8-34). Refer to Paragraphs 8-23 and 8-25 under DC Volts Measurements for circuit descriptions of the Front/Rear switch and the high voltage protection circuits. Refer to Figure 8-34 (Simplified Schematic for AC Volts Measurements) and schematic 6 (AC Converter) for the following circuit descriptions of the AC Converter (A40 Board).

8-142. Input Attenuator and Amplifier.

8-143. ACV and ACV + DCV. When ac measurements are made, the input signal (applied between HI and LO VOLTS input terminals) is fed directly to the input contacts of K1 and K2 in the AC Converter. The K1 contacts are closed for the ACV mode measurements but open when the ACV + DCV mode is selected. The K2 contacts are closed when the ACV + DCV mode is selected but open when the ACV mode is selected. Logic signals HACV (High True, AC Volts) and HACD (High True, AC + DC) control (using NOR gates U10a-d and transistors Q18, Q19) the operation of K1 and K2. These logic signals come from the Range and Function Control Logic circuits (extension of Inguard Controller) on the A20 board. The 51 ohm resistor (R3) in series with the K2 relay compensates for gain changes when the measurement mode is changed from ACV to ACV + DCV.

8-144. Range Switching. FET switches are used to selecte the voltage ranges (1 V, 10 V, 100 V, or 1,000 V). Logic signals (H1, H2, H3, H4, and HM) from the Range and Function Control Logic Circuits control the U8, U9, and U11 comparator stages that turn on or off these FET switches.

8-145. Comparator and FET Switch Operation. The comparators that turn the FET switches on or off have open collector transistor output stages that are referenced to ground by 100 K pull-up resistors. The output of a comparator is −15 V when the output transistor stage is turned on and at ground when the transistor stage is turned off. A +2 V reference voltage from the R65/R66 voltage divider is applied to either the positive or the negative input terminal of each comparator stage. With the +2 V reference applied to the comparator's negative input terminal, a low logic input signal causes its output

to go to −15 V (FET turned off). With a high logic input signal, the comparator's output transistor is turned off and the output rises via the pull-up resistor to ground (FET turned on). For those comparator stages that have the +2 V reference applied to their positive terminal rather than the negative terminals, the comparator operation is exactly opposite of that just described.

8-146. 1, 10, and 100 Volt Range Switching. A negative feedback circuit consisting of Q2, U6, and U7 (see Figure 8-34) is used for the 1, 10, and 100 V ranges. Gain for this circuit is set by the value of the feedback resistor (5 K, 50 K, or 500 K) selected for the measurement range in use. FET switches are used to select the proper feedback resistor.

8-147. Figure 8-32 shows the FET switches and feedback resistor used for the 1 V range. The logic level on the H1 (High True, 1 V range) line to the comparators goes high (from 0 V to +5 V) when the 1 V range is selected. FET switches Q9 and Q5 are turned on (H1) and FET switch Q11 ($\overline{H1}$) is turned off at this time. When a range other than 1 V is selected, H1 will go low. FET's Q9 and Q5 are turned off during these times and Q11 is turned on. FET Q11 shorts out the 1 V range feedback path then the 1 V range is not selected.

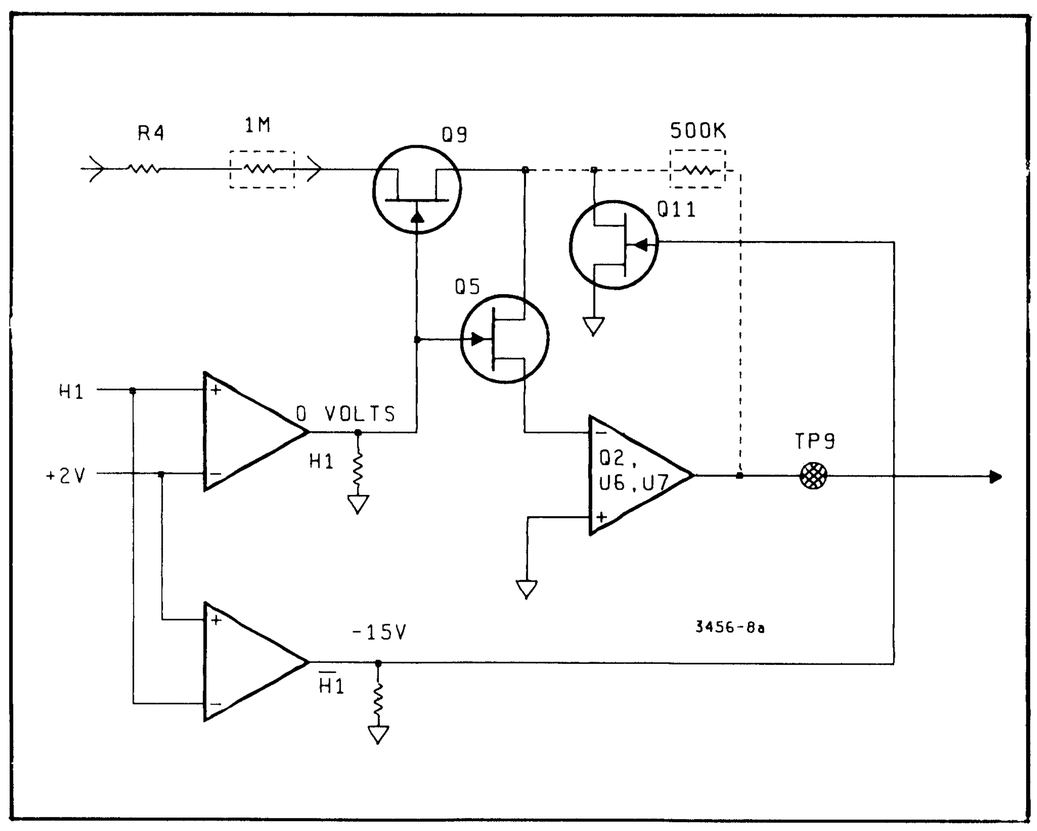

Figure 8-32. FET Switches and Feedback Path for AC Volt Measurement, 1 V Range.

8-148. Resistor R47-capacitor C23 (connected to input of Q5) and resistor R51-capacitor C23 (connected to input of Q7) are R-F filters for the respective 1 V and 10 V ranges. These circuits minimize any R-F that could be rectified by the switching FET's and added to the input signal.

8-149. Input Amplifier. The Input Amplifier consisting of Q2, U6, U7, and associated circuitry inverts and scales down (attenuates) the input signal. An inverted-attenuated version of the input signal appears at TP9. Gains of 1/2, 1/20, and 1/200 for the respective 1 V, 10 V, and 100 V ranges are obtained by selecting the proper feedback resistors. These fixed gains are set by the 1 M ohm input resistor and the feedback resistors. Utilizing fine-line resistors (.01%) eliminate the need for fine-gain adjustments. Full scale inputs for the 1 V, 10 V, and 100 V ranges gives a .5 V output at TP9.

8-150. A source follower input (Q2, gain of 1) is used to keep the input impedance to this circuit high. U6 is a non-inverting positive gain stage that is configured to cancel out dc voltage drift. This stage has an open-loop dc voltage gain of 80 dB; the ac gain is 8. Diodes CR 8-11 clamp the output of U6 at ±1.4 V to prevent saturation. The positions of jumpers 3 and 4 in the U6-Q2 feedback voltage divider are factory selected for zero dc offset voltage at TP9. Variable resistor R12 (N adjust) is used for the final calibration dc offset adjustment.

8-151. FET switch Q20 is only turned on when the 1 V range is enabled (H1A). The gain of the U2, U6, and U7 circuit is then 10 times greater. Resistor R23 and JMPR's 9 and 10 are used in the Q20 circuit for the high frequency factory calibration.

8-152. The output amplifier stage (U7) inverts the signals that go back (via feedback resistors) to the input of Q2. The value of C26 (across input-output of U7) is selected during the factory high frequency adjustment.

8-153. 1000 VOLT RANGE. Amplifier U1 is used only for the 1000 V range (note that the 1000 V range measures voltages up to 700 V rms or 1000 V peak, whichever is less). This inverting amplifier has a gain of 1/400. With a 700 V rms input, full scale output is 1.75 V. When the 1000 V range is selected, the H4 line changes from −15 V to 0 V (FET switch Q8 turned on). Referring to the "Range/Logic Level Table" located on schematic 8 (AC Converter) note that HM in addition to H4 is high true when the 1000 V range is selected. HM and $\overline{HM}$ enable (via FET switches Q1 and Q3) the 100 V feedback path for the Q2, U6, and U7 circuit. This stabilizes the Q2, U6, and U7 circuit by keeping it out of saturation during those times when the 1000 V range is selected.

8-154. The signals appearing at TP2 (output of U1) is an attenuated version of the input signal applied to the AC Converter. JMPR 1 is provided so that the output line from U1 can be opened for troubleshooting.

8-155. Absolute Value Amplifier. The Absolute Value amplifier circuit uses a full-wave rectifying technique to solve for the absolute value of its input signals. This operation is similar to a full-wave rectifier in that the negative portion of the signal is inverted and combined with the positive portion. The rectifying diodes (CR5 and CR7) are located in the feedback loop of U4. This feedback technique drives the diodes into and out of conduction in response to very small signal changes. Because of the high gain of U4, the signal loss for the

low level signals at the higher frequencies are reduced. The total circuit is an inverting amplifier that deals with currents rather than voltages.

8-156. Op amp U4 (bipolar amplifier) drives transistors Q12 and Q13. The collectors of Q12 and Q13 are the current sources that turn on rectifying diodes CR5 and CR7. Diode CR7 is turned on during the positive portion of the input signal and CR5 is turned on during the negative portion. The signal at the anode of CR5 is inverted by U2. The output of U2 (gain of 1) and the signal at the cathode of CR7 are combined for a full-wave rectified output.

8-157. The Absolute Value Amplifier has a gain of 2.5 for the 1, 10, and 100 V ranges and a .5 gain for the 1000 V range. This gain difference is due to the two different input resistance paths (20 K and 100 K) at the input of U4. Fine-line (.01%) resistors are used for all of the gain setting resistances.

8-158. Variable resistor R13 (M adjust) is used for the final calibration dc offset adjustment of the Absolute Value Amplifier stage. The positions of JMPR's 2 and 6 are factory selected to optimize the adjustment range of R13.

8-159. RMS Converter. The RMS Converter calculates the *rms* value of the signals appearing at the output of the Absolute Value Amplifier. The mathematical expression for the measurement of an *rms* voltage is: $Vo = \sqrt{\overline{Vin}^{\,2}}$. This states that the output voltage (Vo) is equal to the square root(r) of the average(m) of the input voltage (Vin) squared(s). The RMS Converter is divided into the following three sections (for the circuit description see Figure 8-34): Squaring Amplifier, Square Root Amplifier, and Averaging Amplifier.

8-160. Squaring Amplifier. The Squaring Amplifier is a logging amplifier whose output is proportional to 2 times the log of its input voltage. A logging amplifier has a gain that is inversely proportional to its input signal. The greater the signal, the less the amplification.

8-161. This circuit consists of an inverting op amp stage (U5) with two transistors (Q16A and Q17A) connected in the negative feedback path. The negative input terminal of U5 is at a virtual ground potential. With the collector of Q16A connected to this virtual ground and its base connected directly to ground, Q16A becomes a base-emitter junction (diode).

8-162. The resistance of Q16A and Q17A base-emitter junctions is a function of the current generated by the input voltage through the 25 K ohm input resistors (25 K ohm fine-line resistors preceeding JMPR 5). The input current flows into the op amp summing node—assume that no current flows into the amplifier. The feedback circuit causes the amplifier output to produce whatever voltage is required to produce a feedback current that will exactly balance the input current. Transistor Q15 is the current source for U5's feedback loop. Q15 provides quick slewing for high crest factor measurements.

8-163. The action of each base-emitter junction (log element) in the feedback path is to take the log of the input voltage (log V_{in}). Since there are two junctions, the output of the Squaring Amplifier will be 2 log (V_{in}) or log $(V_{in})^2$.

8-164. The summing point at the input of U5 is always above ground so current will not be drawn from Q16A and Q17A—pulling current from Q16A will reverse bias Q16a and turn off this junction.

8-165. Averaging Amplifier and Square Root Amplifier. The operations of the Averaging Amplifier and the Square Root Amplifier are simultaneous and interdependent. Summing or time averaging takes place in the Averaging Amplifier. The square root of this time averaged input ("mean" value) is taken by the Square Root Amplifier—this reverses the action of the Squaring Amplifier. The combined output of the Averaging and Square Root amplifiers is a dc level proportional to the rms value of the input signal.

8-166. Averaging Amplifier. The Averaging Amplifier is a 3-pole active filter consisting of op amp U12 and the R-C networks connected to the output of U12. Pole 1 consists of C28 and the 282.2 K and 138.6 K ohm fine-line resistors that are in parallel with C28. Pole 2 consists of C30, R72, and R73 and pole 3 consists of C33, R78, and R79. The time constant for pole 1 is changed (changed from fast ac measurement position by the front panel FILTER button) when FET switch Q21 is closed by logic signal HAF (High True Analog Filter). This connects C29 in parallel with C28 which increases the R-C time constant. FET switches Q22 and Q23 are open ($\overline{HAF}$) when the Analog Filter is enabled. This also increased the R-C time constant by removing R73 and R79 from the circuit. Diode CR14 holds the source of Q21 at .7 V (one diode junction voltage drop). This prevents any forward biasing of Q21 (due to leakage current through Q21 charging C29) that may turn this FET on when the Analog Filter is disabled.

8-167. The output from the Averaging Amplifier, U12, (TP14) is connected to the input of the Square Root Amplifier, U13. The output of U13 is connected to the input of U12, so amplifier U13 appears in the feedback circuit of amplifier U12. Source follower Q14, in the output of the Averaging Amplifier, is a unity gain buffer stage.

8-168. Square Root Amplifier. The Square Root Amplifier consists of an inverting op amp stage (U13) with a base-emitter junction (Q16B) connected in the negative feedback path. The base and collector of Q16B are at approximately the same potential since the collector is connected to virtual ground. The current flow thorugh the base-emitter junctions of Q16B and Q17B (antilog elements) balance out the current through

Q16A and Q17A in the Squaring Amplifier. Diode CR15 balances out the voltage drop across the base-emitter junction of Q16B.

8-169. A 10 V dc full-scale output from the AC Converter appears at TP4 for full-scale inputs on the 1, 10 and 100 V ranges (e.g. for a 100 V rms full-scale input with the 100 V range selected, the output will be 10 V). For the 1000 V range, 7 V dc is the output for 700 V rms full-scale input. See Table 8-8 for the AC Converter stage gains for the 1, 10, 100, and 1000 volt ranges.

Table 8-8. AC Converter Stage Gains.

Voltage Range	Input Atten & Amp			Absolute Value Amp Gain	RMS Conv. Gain	Total Gain
	Scale Factor	Full Scale Output	Gain			
1 V	1/2	.5	.5	2.5	8	10
10 V	1/20	.5	.05	2.5	8	1
100 V	1/200	.5	.005	2.5	8	.1
1000 V*	1/400	1.75	.0025	.5	8	.01

*700 V rms max.

8-170. The dc output from the AC Converter connects through a portion of the Input Switching (see Figure 8-33) on the way to the Input Amplifier. The Input Amplifier is switched to a X1 gain for the ac mode. Refer to DC Volts Measurement Paragraphs 8-30, 8-40, and 8-48 for circuit descriptions of the Input Switching, Input Amplifier, and A/D Converter respectively.

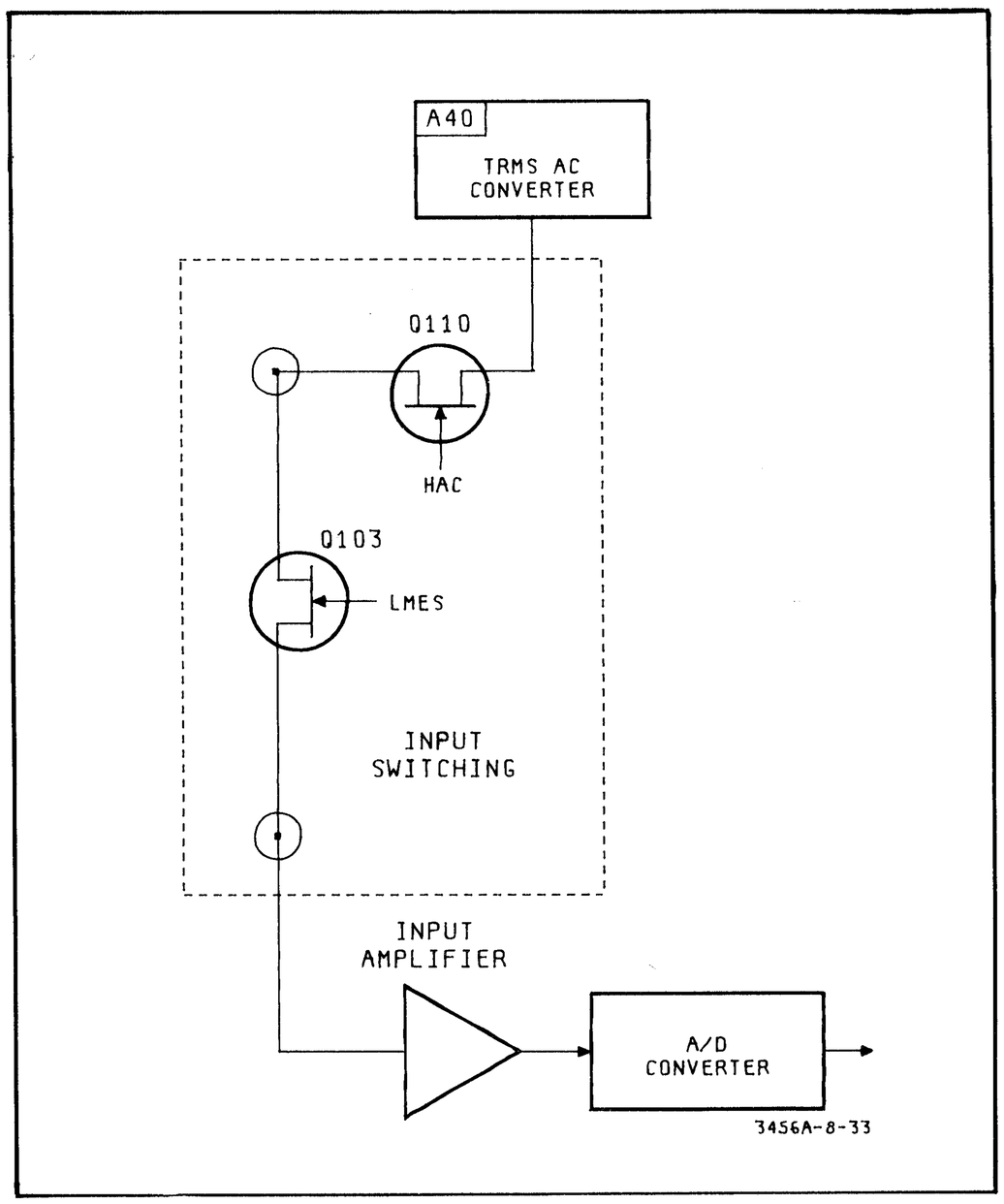

Figure 8-33. AC Converter, Output Signal Path.

8-171. RATIO MEASUREMENTS.

8-172. During a ratio measurement, three complete measurement cycles are done. The first cycle is either a DCV, ACV, or ACV + DCV measurement (dependent upon the ratio function selected). During this cycle Autozero is always enabled by the Outguard microprocessor for local operation. For remote operation, Autozero should not be disabled by the intrument's controller. A controller error message will be displayed if Autozero is disabled. The second and third cycles are the DC Reference measurements with Autozero disabled (disabled by Outguard Microprocessor). During the second cycle, a Reference High Measurement is taken (see Figure 8-35). A Reference Low is taken (see Figure 8-36) during the third measurement cycle.

8-173. For DCV/DCV Ratio measurements, relay K102 and FET switch Q109 (100 and 1000 V ranges) or K103 and FET switch Q116 (.1, 1, and 10 V ranges) are closed during the signal voltage measurement (first cycle). The relay (K102 or K103) for the selected voltage range remains closed during the Reference Voltage measurement (second and third cycle) but the associated FET switch (Q109 or Q116) is open. For ACV/DCV or ACV + DCV/DCV Ratio Measurements, FET switch Q110 is closed for the signal voltage measurement but is open during the Reference Voltage measurements.

8-174. All of the voltages measured during the Ratio measurement cycles are referenced to the VOLTS LOW terminal. Measurement data is transferred from the Inguard Logic to the Outguard Logic where the Ratio measurement is computed (see Ratio formula Figure 8-35). Measurement errors due to lead resistance (R_{lead}) between the RATIO REF 4WR LO and VOLTS LO are subtracted during these computations.

8-175. The voltage measurement circuit paths for the Reference High (H4WH and LMES, FET's Q115 and Q103 enabled) and the Reference Low (HGND, FET Q105 enabled) are highlighted in the respective Reference High (see Figure 8-35) and Reference Low (see Figure 8-36) illustrations.

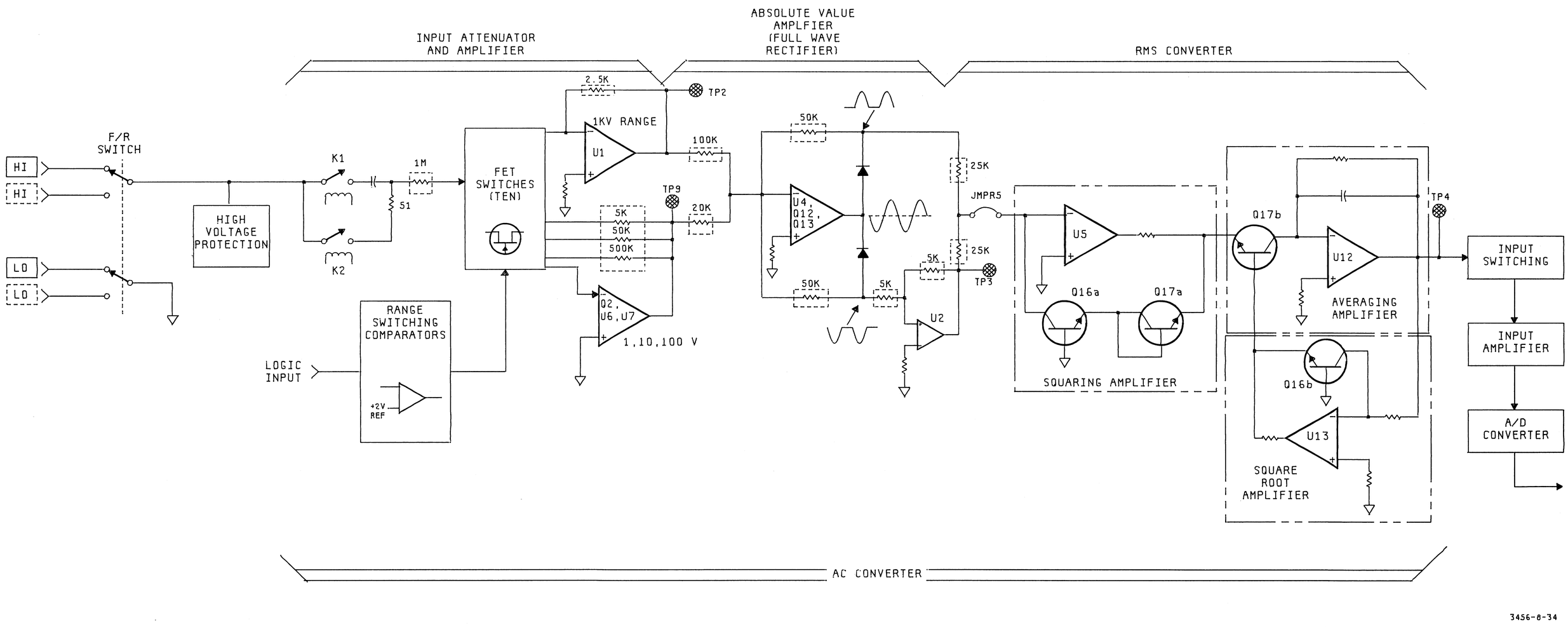

Figure 8-34. Simplified Schematic for AC Volts Measurements.

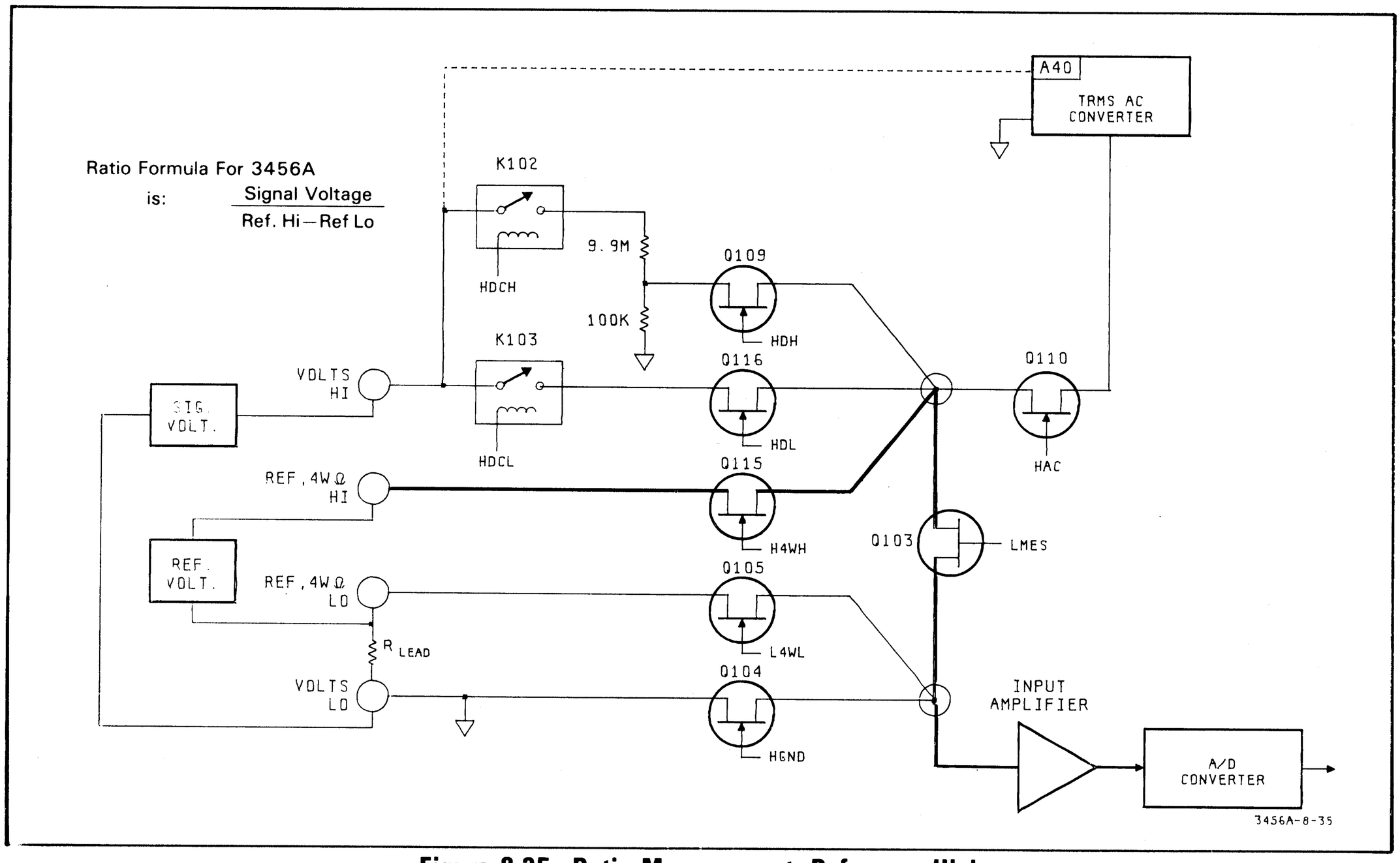

Figure 8-35. Ratio Measurement, Reference High.

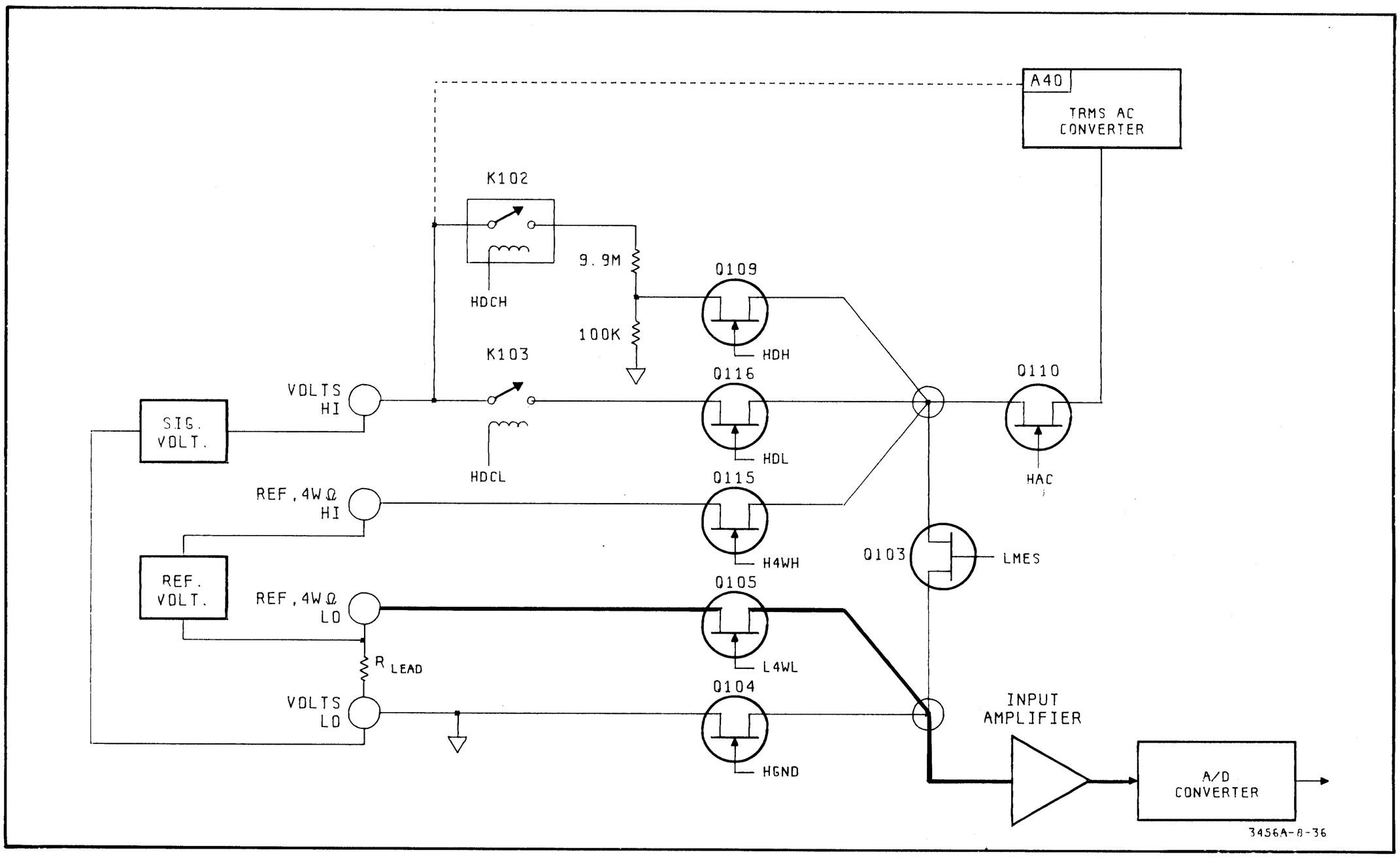

Figure 8-36. Ratio Measurement, Reference Low.

8-176. INGUARD LOGIC (A30 Board).

8-177. General.

8-178. For the theory of operation, the functions performed by the Inguard Logic circuits are divided into the following three major operations (see Figure 8-37 Simplified Block Diagram, Inguard Logic):

a. Interfacing (Isolation Logic) between the Inguard and Outguard.

1. Receiver—Paragraph 8-183
2. Transmitter—Paragraph 8-186

b. Controlling the different ranges and functions.

1. Inguard Microprocessor—Paragraph 8-189
2. Range and Function Control—Paragraph 8-191

c. Controlling the timing and the A/D Converter circuits during the actual measurements.

1. ALE and ALE Synchronizer—Paragraph 8-198
2. ALE Clock for A/D Converter—Paragraph 8-199
3. FRAC and Rundown Operation—Paragraph 8-200
4. Rundown Timing—Paragraph 8-206
5. FRAC Circuit Description—Paragraph 8-211
6. LOVL (Low Overload)—Paragraph 8-221
7. Run/Test Operation—Paragraph 8-222

8-179. Set-up information from the Main Controller (Outguard) is received by the Inguard through the Isolation Logic. This information is used by the Inguard microprocessor (μP) and the "Range and Function Control Logic" to control the various relays and FET switches for the specified measurements. The Range and Function Control Logic section, although physically located on the A20, is an extension to the A30 board's control logic.

8-180. Another major section on the A30 is the analog to digital (A/D) controller circuits. These provide the critical counter and timing signals for fast, precise measurements. Digitized measurement information is sent through the Isolation Logic to the Outguard for conversion to useable information (e.g. front panel display).

8-181. Isolation Logic.

8-182. General. The Isolation Logic on A30 consists of a receiver which receives information from the Outguard and a transmitter which sends information to the Outguard (See Figure 8-37). Both use transformers for coupling. Each transformer consists of windings on a torodial core and a single wire passing through the center of the core for coupling. Transformer coupling allows the Inguard ground (connected to low input terminal) to be isolated from the Outguard ground which is connected to earth ground.

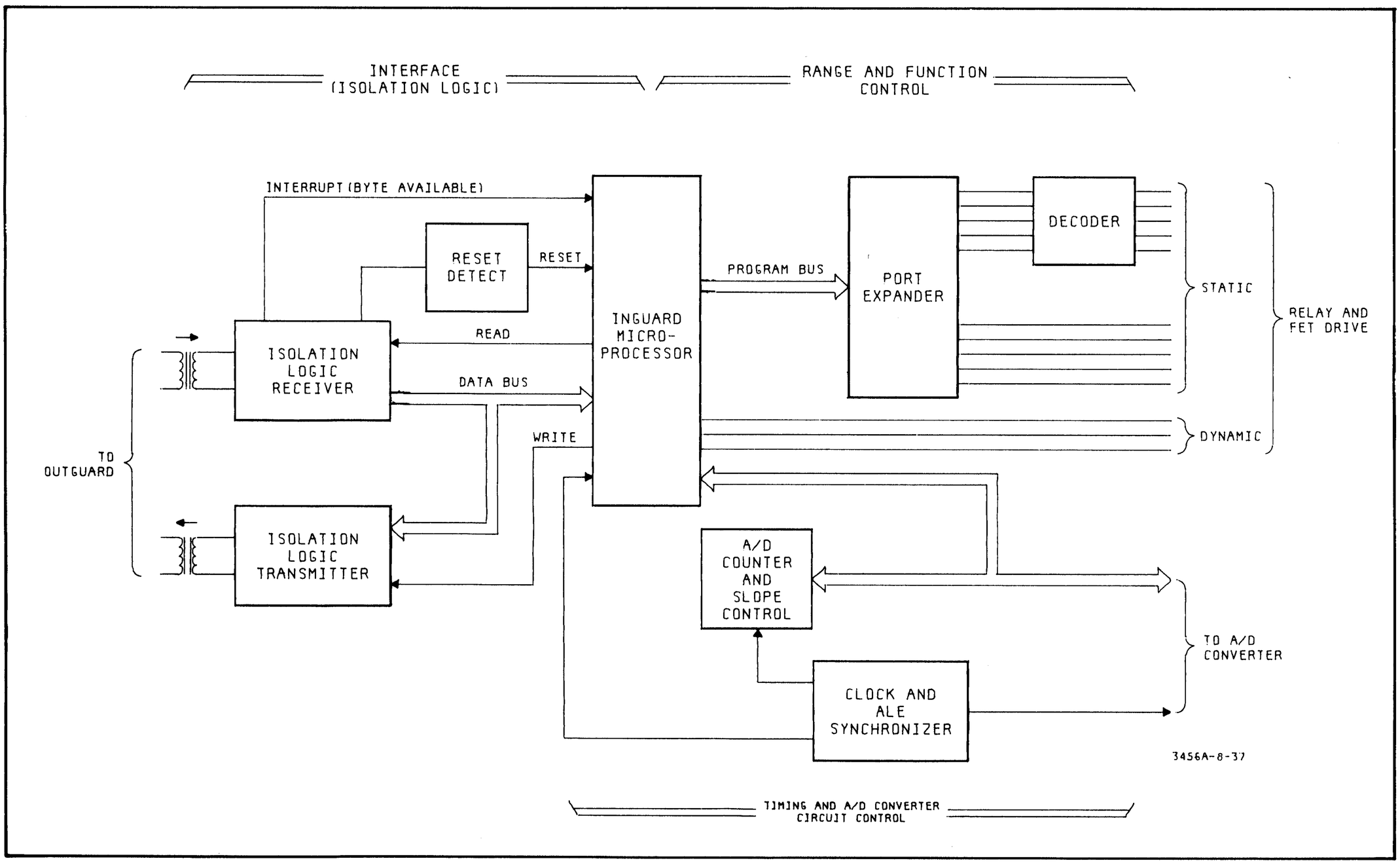

Figure 8-37. Simplified Block Diagram, Inguard Logic.

8-183. Receiver. Refer to Figure 8-39 (Isolation Logic, Receiver) for the following circuit description. The serial data received from the Outguard Logic through transformer T2 consist of a group of 9 bits with the first bit always a "1". Figure 8-38 shows the 9 bit waveform present at A30TP1 and A30TP2 when internal self-test #3 (Isolation Logic check) is enabled. (See troubleshooting section for the procedure used to select test #3).

8-184. A clock is derived from this serial data by U23, U21a, and U20b. This clock is used to shift the related receiver data into the "serial in—parallel out" shift register (U24). When the 8th bit is shifted in, Q_H (and U20a pin 2) will be high since the first bit sent is always a logic 1. When the 9th bit is shifted in, the clock at U20a pin 3 latches the D input causing a low to be sent to the interrupt (int) pin of U13. This interrupt tells the μP that "data is ready." The μP (U13, pin 8) then generates a read signal (low true) that enables the tri-state buffer (U16). Parallel data transfer from U16 to U13 occurs at this time.

8-185. Reset input to U13 (pin 4) occurs at turn-on, when the front panel Reset button is pressed, and when the Outguard wishes to fully reset the Inguard circuits. Eight-input NAND gate, U22, generates an initializing reset for U13 (pin 4) when all logic "ones" have been loaded into U24. The all "one" pattern comes from the Outguard μP. NOR gates U21c and U21d, R10, C7, and C10 lengthen the reset pulse duration to assure reset.

8-186. Transmitter. Refer to Figure 8-40 (Isolation Logic, Transmitter) for the following circuit description. Data from U13 is transferred across the 8-bit data bus to U15, a parallel to serial shift register. This transfer takes place when U13 writes (U13 Pin 10 goes low). Serial data transfer from U15 to U19a begins when the shift load level at U15 pin 1 goes high. Data is transmitted to the Outguard at the ALE clock rate. This clock's frequency is 390 kHz for 60 Hz operation and 325 kHz for 50 Hz.

8-187. An additional bit (interrupt bit) is added to the 8-bit byte during the serial shift out of U15. This bit, which is always a logic "1", becomes the first bit of the 9 bits transmitted to the Outguard. This bit is provided by connecting U15's "serial in" terminal (pin 10) to +5 V. The Q and $\overline{Q}$ outputs from U19a are fed to parallel connected gates (U18) to provide the required drive for T1's primary.

8-188. The outputs of U18 are disabled after each 9-bit group by the 9 count circuit consisting of U17, U19b, and U14a. The count sequence starts when U13 pin 10 returns high after a write command. The Q output of positive edge triggered U19b goes high at this time which removes the clear from U17 and also enables U14a. Four bit counter U17 counts 9 bits, at which time outputs QA and QD go high. Flip-Flop U19b is cleared at count 9 by the low output from NAND gate U14d. The Q output of U19b goes low again at this time which

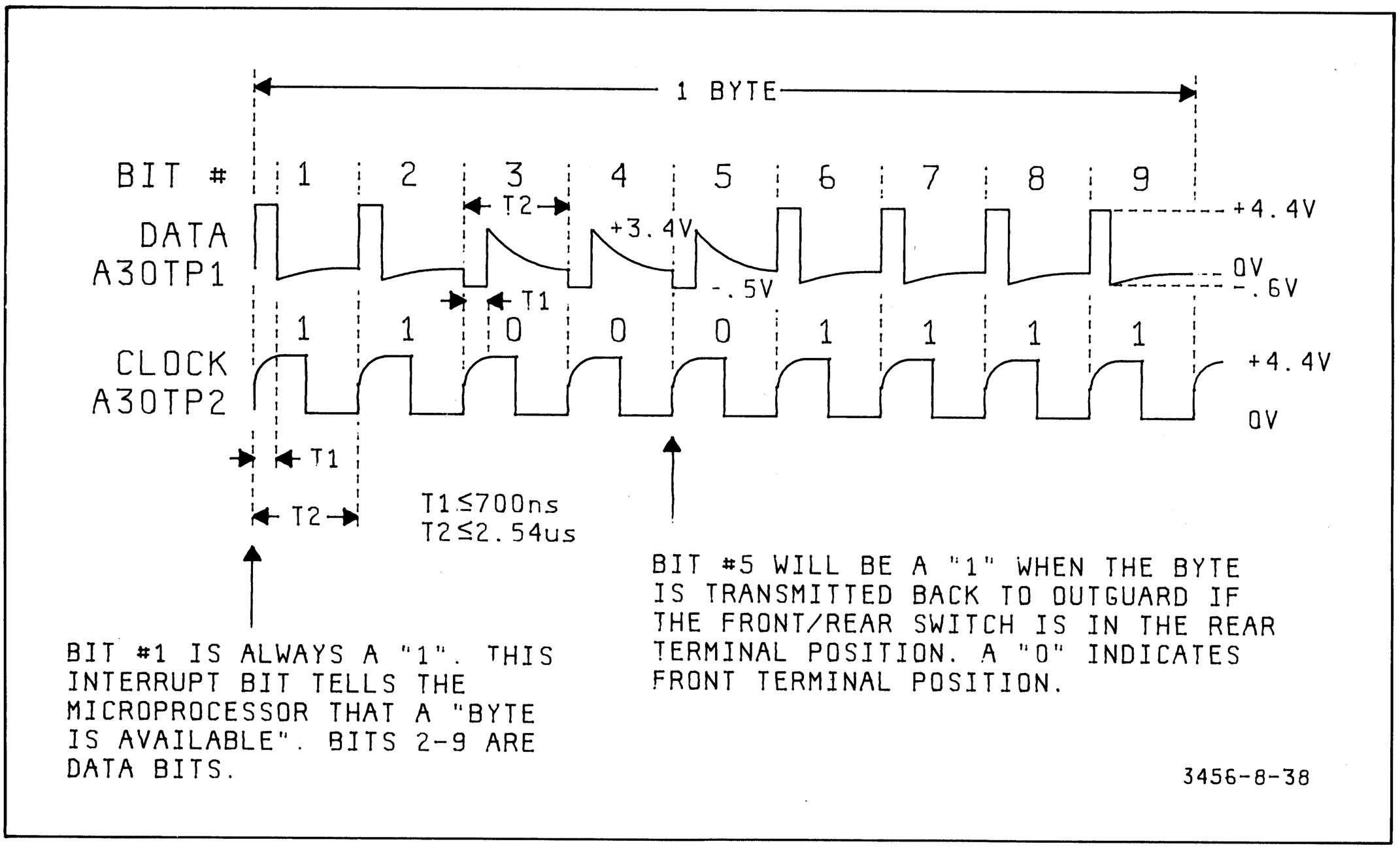

Figure 8-38. Isolation Logic Data and Clock (at Receiver) with Internal Self-Test #3 Enabled.

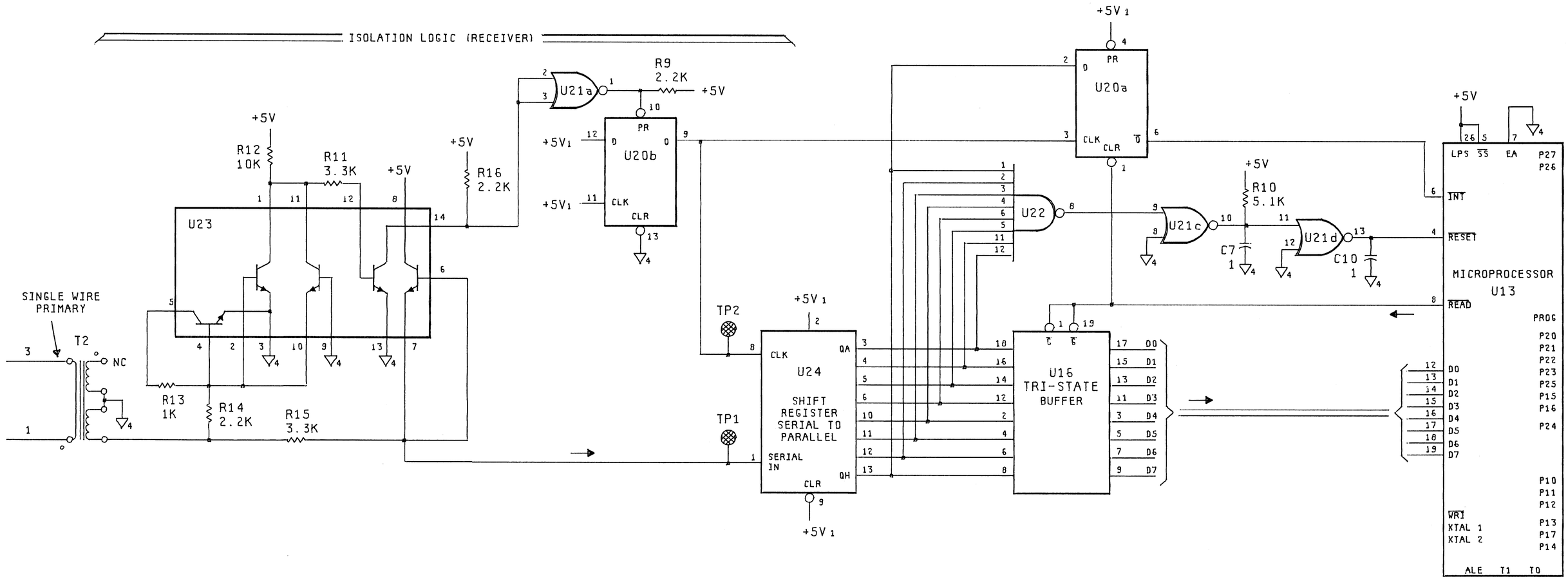

Figure 8-39. Isolation Logic, Receiver.

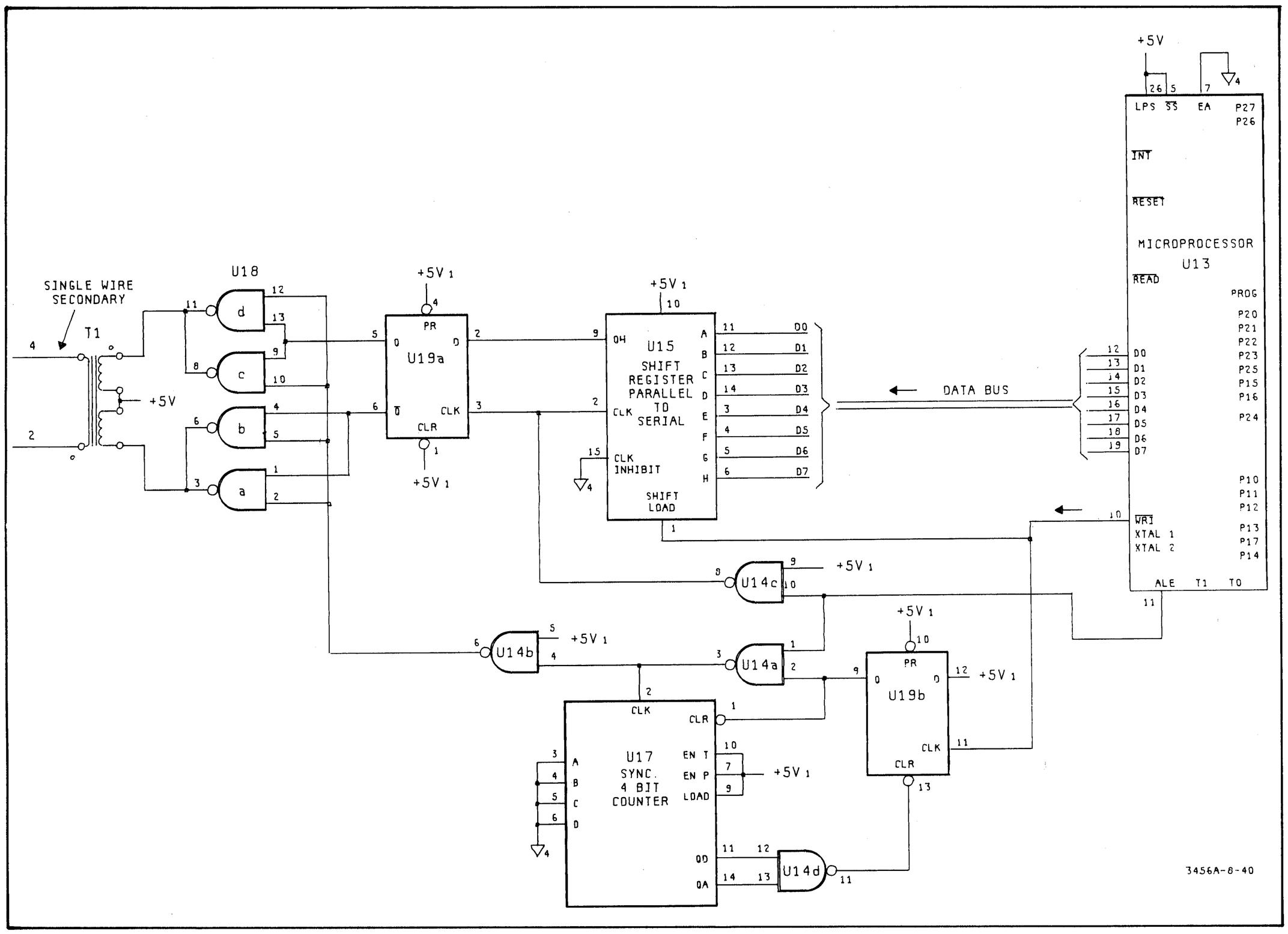

Figure 8-40. Isolation Logic, Transmitter.

again clears U17 and disables NAND gate U14a. The next negative-to-positive transition on the $\overline{\text{WRI}}$ line (U13, pin 10) will begin another 9 count/shift cycle.

8-189. Inguard Microprocessor. The μP contains a 1K x 8 ROM (8-bit word, Read Only Memory) and a 64 x 8 RAM (Random Access Memory (Read/Write memory)). The ROM is used for control of the Inguard Circuits. The RAM is used for temporary storage of instruction data received from the Outguard and also for measurement data that will will be sent to the Outguard. An 8-bit bi-directional data bus is used for RAM data transfer. The μP has no address lines but contains two 8-bit quasi-directional static ports (PT10-17 and PT20-27) for input/output lines. These lines are used for Inguard circuit control during ranging, function changes, measurements, etc.

8-190. The μP has an internal oscillator, clock circuits, and an 8-bit time/counter. These are used for the timing, controlling, and measuring that takes place during the Inguard measurement cycles. The μP also generates the ALE clock that is used by other A30 board circuits and by the A/D Converter. The Input (from crystal oscillator A30Q1) for U13's internal oscillator is 5.85 MHz for 60 Hz and 4.875 for 50 Hz operation. The ALE (Address Latch Enable) clock is 1/15 the frequency of A30Q1, or 390 kHz and 325 kHz respectively.

8-191. Range and Function Control.

8-192. General. Refer to Schematic 8 (Inguard Logic Schematic) and Schematic 6 (Range and Function Control Logic Schematic) for the following circuit description. Range and function set-up data is received via the Isolation Logic from the Outguard. This data is temporarily stored by U13 and then passed to the Port Expander (U702) over I/O lines PT20 through PT23. These 4 output lines are expanded to 16 lines by U702. The Prog line (U13, pin 25) is the Program strobe line that is used to control the data transfer to U702. Ports PT15, PT16, and PT25 (LGND, LMES, and HAF line respectively) go directly to Inguard Switching circuits on the A20 board.

8-193. LGND (Low Ground-Enable) and LMES (Low Measure-Enable) are used to control FET switches in the Input Switching circuits when Autozero is selected. HAF (High Analog Filter-Enable) is used to control a FET switch that enables the Analog Filter which is also

in the Input Switching circuit. Refer to the Input Switching sections under DC Volts Measurement for additional circuit details regarding the Autozero and Analog Filter circuits.

8-194. Port Expander A20U702. See Schematic 6 (Range and Function Control Logic Schematic) and Figure 8-59 (Mnemonic Definitions) for the following circuit description. Port Expander U702 consists of four 4-bit static I/O ports (PT40-43, PT50-53, PT60-63, and PT70-73) and one 4-bit interfacing port (PT20-23). Timing pulses from A30U13 are sent over the Prog (Program) line to transfer 4-bit nibbles (via PT20-23) to U702. The first nibble, consisting of the op-code and port address, is present when a high to low transition occurs on the Prog line. The second nibble (the 4 data bits) is present when a low to high transition occurs on the Prog line.

8-195. The Logic signals (5 V logic) from U702 control (either directly or indirectly through transistors or the U701 decoder) range and function circuits in the Input Switching, Ohms Current Source, Input Amplifier, and AC Converter. This control is accomplished with relays or comparator/FET switches that are located in these four sections. Refer to the circuit description of these circuits for switching details.

8-196. Output transistors are used for the logic outputs from PT61, PT62, and PT63 to provide the drive required by the relays coils in the Input switching circuits. The collector or each transistor is diode clamped to + 15 volts for protection against relay switching transients. Voltage doubler C700 provides the higher voltage needed by K103 (see Input Switching, Paragraph 8-32) during turn-on.

8-197. Dual 1-4 Decoder A20U701. Coded range and gain control data from the Inguard microprocessor is transferred from Port Expander U702 (via PT51, PT52, PT71, PT72, and PT73) to Decoder U701. This data is expanded from 4 line-input (PT71 is load enable line) to 8 line-output during the decoding process. Logic signals from U701 control (via comparator/FET switches) range settings for the AC Converter and Ohms Current Source, and gain settings for the Input Amplifier. Pull-up resistors (51K) are required at U701's outputs because they drive CMOS logic (U702) directly. Table 8-9 is a truth table with range decoding information for the "A" section of decoder U701. Table 8-10 is a truth table with gain decoding information for the "B" section of U701.

Table 8-9. Range Decoding U701.

INPUTS			OUTPUTS					
Enable	Select		H4	H3	H2	H1	Range	
$\overline{G}_{A(Pin\ 1)}$	A_0(2)	A_1(3)	Q_{A3}(7)	Q_{A2}(6)	Q_{A1}(5)	Q_{A0}(4)	Ohms	ACV
0	0	0	0	0	0	1	10M-1G	1
0	1	0	0	0	1	0	1M	10
0	0	1	0	1	0	0	10K&100K	100
0	1	1	1	0	0	0	100&1K	1000
1	X	X	0	0	0	0	–	–

X = Don't Care 1 = High 0 = Low

Table 8-10. Gain Decoding U701.

Inputs			Outputs						
Enable	Select		HA1	HA2	HA10	HA100			
$\overline{G}_B$(Pin 15)	B_0(14)	B_1(13)	Q_{B3}(9)	Q_{B2}(10)	Q_{B1}(11)	Q_{B0}(12)	Gain	DC Range	Ohms
0	0	0	0	0	0	1	100	100 mV	100
0	1	0	0	0	1	0	10	1V&100V	1K&10K
0	0	1	0	1	0	0	2	–	100K-1G
0	1	1	1	0	0	0	1*	10V&1000V	–

*Gain of 1 for all AC converter ranges

8-198. ALE and ALE Synchronizer. Refer to Figure 8-41 (ALE and ALE Synchronizer) for the following circuit descriptions. Part of the ALE Synchronizer is a crystal controlled oscillator circuit consisting of transistor Q1 and crystal Y1. The frequency (see schematic) and the waveform (4.6 V P-P sinewave) of the oscillator

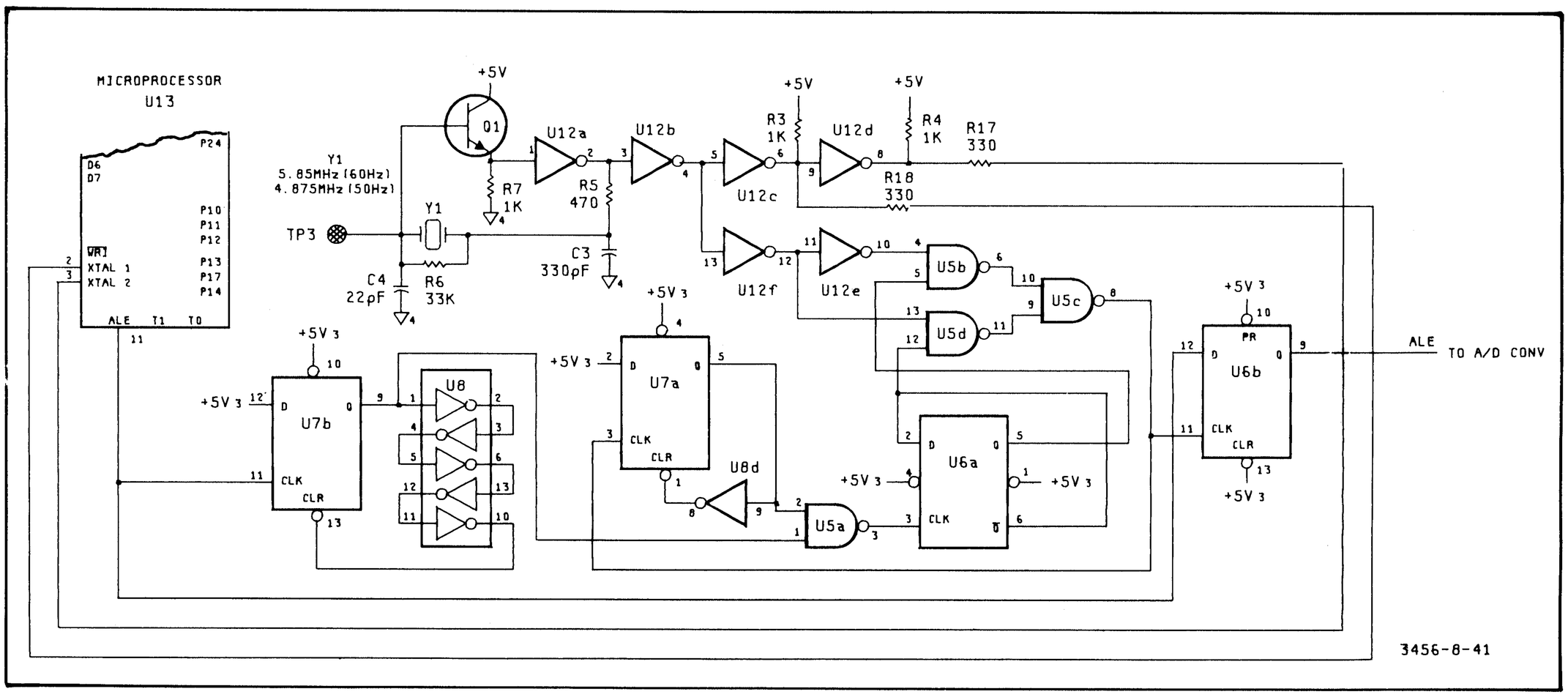

Figure 8-41. ALE and ALE Synchronizer.

can be monitored at TP3. The output from U12c and U12d provide the 2-phase crystal reference inputs for U13. The output from the crystal reference is also fed (via inverters U12f and U12e) to the circuits that stabilize and clean up the ALE clock appearing at U6b, pin 9—the ALE clock for the A/D Converter.

8-199. ALE Clock for A/D Converter. The ALE clock used for slope generation in the A/D Converter must occur within a certain time frame and be free of jitter and noise. Four D-type positivie edge-triggered flip-flops (U6a, U6b, U7a, U7b), hex inverters U8a-d, and NAND gates U5a-d are configured to meet these requirements. Flip-flops U7a and U7b are preconditioned by connecting their preset (pins 4 and 10) and D input (pins 2 and 12) to +5 V via a pull-up resistor. This allows U7a and U7b to be reset by their own "Q" outputs (outputs delayed and inverted by U8 inverters). The output of U7a is a pulse train (approximately 0 to +3.2 V, 40 ns pulse width) occurring at the crystal oscillator frequency. U7b's output is a pulse train (approximately 0 to +3.6 V, 60 ns pulse width) that occurs at the ALE clock rate. Applying these pulse trains to NAND gate U5a, and U5a's output to flip-flop U6a provides strobe pulses for U5b and U5d. These strobes will change when necessary to advance or delay slightly the clock pulses at U5c's output. The output of U5c is used to strobe the ALE clock pulses through U6b ensuring that the ALE pulses occur during the desired time period and are free of jitter and noise.

8-200. FRAC. Refer to Figure 8-44 (FRAC Circuits) for the following circuit discussion. The FRAC (Five Rundown ALE Counter) circuit is part of a large loop that includes the A13 μP and the integrator/comparator circuits in the A/D Converter. The FRAC looks at both the polarity bit (HSA) from U13 and the comparator bit (HCP) from the A/D comparator during rundown. The HSA and HCP logic levels contain slope information which FRAC uses to start or stop the slope in the integrator circuit. The FRAC counts the time the slopes are on by strobing the μP's internal counter (U13, pin 39) on every 5th ALE during rundown, if an $S \pm 4$, $S-3$, $S+2$, or $S-1$ slope is on. Each time period between these strobes is equal to one A/D count, therefore 5 ALE's equal one A/D count (12.82 microseconds for 60 Hz, 15.38 microseconds for 50 Hz). The μP counts these A/D time periods during rundown and computes the measurement value.

8-201. FRAC's Function During Rundown. Figure 8-42 (Slope Sequence During Rundown) illustrates the slope sequence during rundown and the FRAC actions that occur during rundown that control the slope generation. Refer to the A/D Converter theory section (Paragraph 8-70) for additional information regarding the A/D Converter and Slope Generation.

8-202. Four different slopes are used during rundown to achieve highly accurate measurements of the residual voltage remaining on the A/D Converter's integrator after runup. The first type of slope (called $S \pm 4$) is the steepest and it continues for an integer number of A/D counts. After the slope has crossed zero, $S-3$, which is exactly a decade less in steepness, is applied. After $S-3$ crosses zero, $S+2$ (1/100 $S+4$ slope) is applied and after this crosses zero, $S-1$ (1/1000 $S+4$ slope) is applied. The time duration of each slope is counted sequentially, with that count subsequently being stored in memory, to develop the least significant digits during rundown.

8-203. FRAC will not stop counting at the exact instant that zero-crossing occurs during the $S \pm 4$, $S-3$, and $S+2$ slopes nor will these slopes stop immediately at zero-crossing. The counting and slopes stop at the next A/D count after zero crossing (see T_8, Figure 8-42), therefore FRAC knows that zero-crossing has occurred but does not know the exact time that is happened. This delay accounts for the overshoots shown in Figure 8-42. During the final rundown slope, the $S-1$ slope is turned off shortly after zero-crossing—on an ALE count versus an A/D count.

8-204. The μP always has an $S+0$ period ready to follow a slope period after zero-crossing occurs. FRAC stops counting during a $S+0$ period which allows time for the logic circuits to make circuit condition checks and decisions.

8-205. The same slope pattern will always be repeated during rundown—this is controlled by the ROM program in U13. It is FRAC's responsibility during rundown to: (1) generate the A/D counts and strobe U13 at each count, (2) determine if the first $S \pm 4$ slope is the correct polarity, (3) determine when zero crossing occurs, (4) stop counting at the next A/D count after zero crossing occurs, (5) start counting at the beginning of each slope.

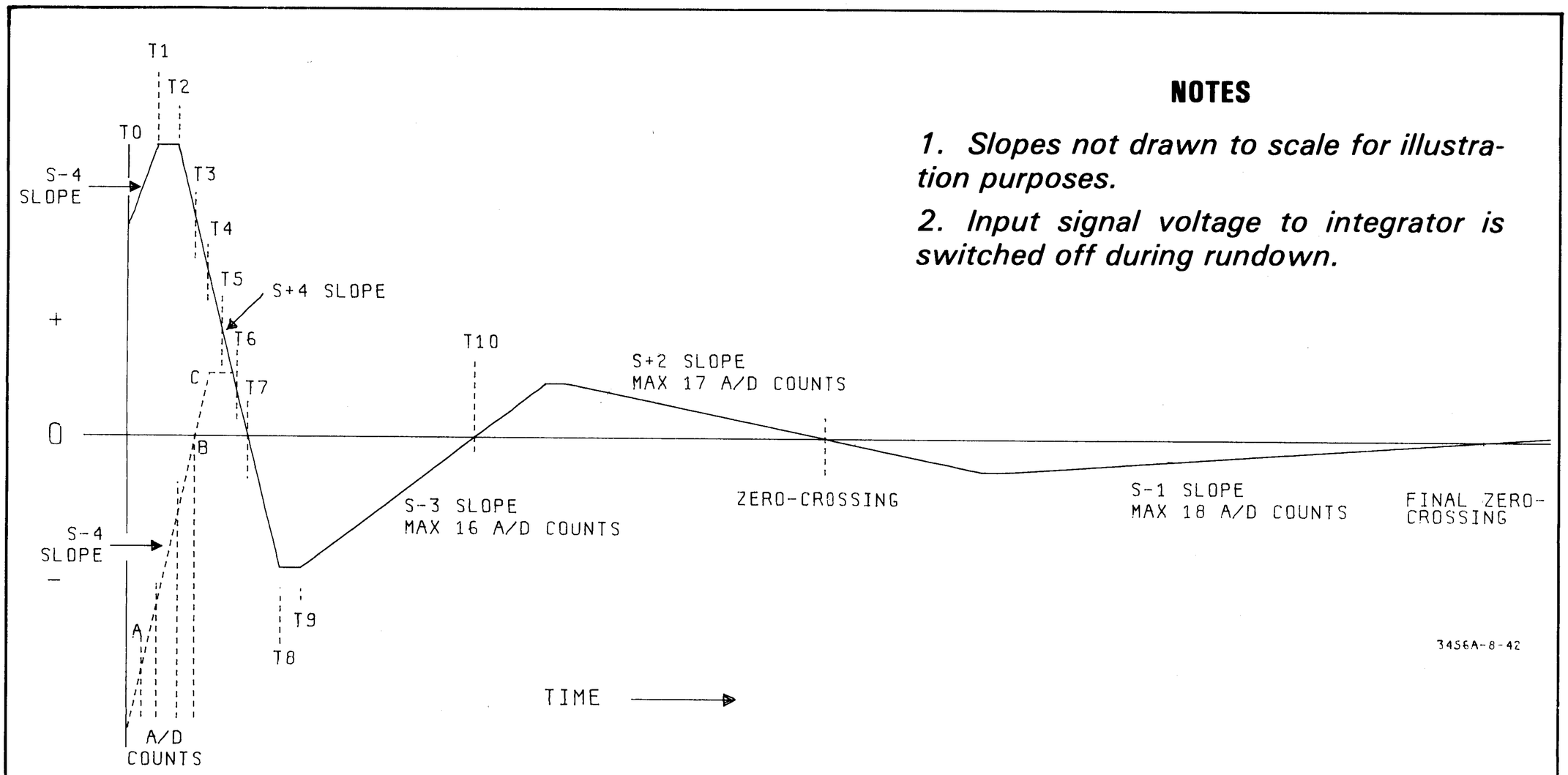

NOTES

1. Slopes not drawn to scale for illustration purposes.

2. Input signal voltage to integrator is switched off during rundown.

T0: FRAC enabled, starts counting ALE's (5 ALE's = 1 A/D Count); Rundown always starts with S − 4 slope.

T1: FRAC senses that slope is already positive; Slope direction must be reversed to reach zero-crossing; Max of 2 A/D counts after T0; FRAC lets S + 0 through (flat period); Counting stops during S + 0 period when logic decisions are being made.

T2: S + 4 slope starts; FRAC starts A/D counting again; S + 4 slope lasts for max of 12 A/D counts or until zero crossing.

T3-T6: A/D count periods; FRAC strobes microprocessor at each A/D time.

T7: Zero crossing occurs; FRAC will detect this event but will continue to count until next A/D count occurs.

T8: A/D Count; FRAC lets S + 0 through; counting stops.

T9: S − 3 Slope starts; Will last for max of 16 A/D counts or until zero crossing occurs.

T10: Zero-crossing occurs; FRAC detect zero-crossing but continues counting until next A/D count; NOTE: FRAC continues the A/D counting, stobing microprocessor, detecting zero-crossing, etc. For all of the remaining slopes in the same manner as it did for the S ± 4 slopes.

A: S − 4 slope with negative input signal (input signal is positive for T0-T8 example)

B: Zero-crossing occurs; FRAC detects this crossing but continues to count.

C: A/D Count; S + 0 let through; A/D counting stops; S + 4 slope will follow the S + 0 period so that the final S − 1 slope will always cross zero going in a positive direction; This S + 4 slope will last until zero-crossing occurs—max of 2 A/D counts.

Figure 8-42. Slope Sequence During Rundown.

Figure 8-42. Slope Sequence During Rundown.

8-206. Rundown Timing Chart. Figure 8-43 is a timing chart that illustrates the order in which the rundown slopes are generated and the maximum counts allowed for each type of slope.

8-207. At the beginning of each rundown sequence, either an S+4 or S−4 slope is applied to the integrator voltage for a set time period (10 A/D counts). The selected slope reduces the integrator voltage level so that zero-crossing is assured during the following S±4 rundown sequence. The actual rundown counting does not start until the following S−4 slope is turned on but these 10 A/D counts are included when the final measurement value is determined.

8-208. Rundown Slope Sequence. Rundown always starts with an S−4 which can last for either a maximum of 2 A/D counts or a maximum of 12 A/D counts, depending on the polarity of the integrator output voltage. When the voltage is positive at the integrator's output at the beginning of rundown, the positive going S−4 slope is going away from rather than going towards zero. When this condition is sensed by the Inguard Logic circuits, the S−4 slope is terminated—this termination occurs within 2 A/D counts after the S−4 slope is started. At this time, Inguard Logic lets an S+0 period pass through and then (after S+0 period) sends the command for an S+4 slope. The S+4 slope can last for a period of up to 12 A/D counts (usually lasts for shorter period) but stops when the A/D count occurs after zero-crossing.

Frac enabled at this time ↓ Frac disabled at this time ↓

Type Slope	S+4 or S−4	S−4	S+4	S−3	S+2	S−1	S+0
		*	*	*	*	*	*
A/D Counts	10	** 2 or 12	** 12 or 2	*** 16	*** 17	*** 18	6.6
ALE's	50	10 or 60	60 or 10	80	85	90	33

* S+0 period (Dead time, Frac not counting during S+0 periods)

** Maximum of either 2 or 12 A/D counts allowed

*** Maximum counts allowed

NOTE: Chart not drawn to scale

Figure 8-43. Rundown Timing Chart.

8-209. The S−3, S+2, and S−1 slopes can last for the maximum A/D count periods shown (16, 17, and 18 respectively) but stop after zero-crossing occurs. An S+0 period (.4 A/D counts or 2 ALE counts) occurs at the end of each of these slope periods. FRAC is enabled during these S+0 periods but is not counting.

8-210. FRAC is disabled at the end of the last S+0 period following the S−1 slope. The S+0 period (33 ALE counts or 6.6 A/D counts) occurring after FRAC's disablement is allocated to the μP for making calculations relating to the input signal measurements. The 10 A/D count period (S±4 slope) shown at the beginning of the Rundown Timing Chart follows this 33 ALE S+0 period. FRAC is enabled again at the end of this 10 A/D count period.

8-211. FRAC Circuit Description. Refer to Figure 8-44 (FRAC Circuit) for the following circuit description. The FRAC is part of a large loop and the focal point of the FRAC circuit is U11, a 4-bit counter. A table showing the "Q" output states for U11, during FRAC's count-to-five routine, is shown in Figure 8-44. Only two of these outputs, Q_C and Q_D, are used for FRAC circuit operations.

8-212. The Q_C output goes high on the fifth ALE count. This high accomplishes the following three things: (1) Strobes the counter in the MP (U13, pin 39). (2) A high is applied (via U2a and U2b) to the "D" input of U11 (pin 6) if a zero-crossing has already occurred (see Figure 8-44). (3) A low is applied (via U1e, U2d and U1f) to the load input of U11 (pin 9). A low on the load input of U9 causes U11's outputs (Q_D, Q_C, Q_B, and Q_A) to agree with the setup data on pins 6, 5, 4, and 3 when the next ALE pulse (clk input) occurs. The outputs will be 1 0 0 0 if a zero-crossing had occurred (see U11 Output Table).

8-213. The Output Table for U11 shows that FRAC starts another 5 ALE count cycle immediately, if zero-crossing has not occurred (e.g. outputs change from 0 1 0 0 at 5th ALE count to 0 0 0 0 at count 1). If zero-crossing has taken place, the outputs change from 0 1 0 0 at the 5th ALE count to 1 0 0 0, the wait state (Q_D high, an S+0 period). Counter U11 is cleared to all zeros on the next clock pulse and starts another 5 ALE cycle.

8-214. Zero-Crossing Detection Circuit (U3a). Zero-crossing is sensed by U3a (exclusive-OR gate) when HCP (High True, Compare) changes states. The output of U3a goes high at this time, (high on pin 2 of NAND gate U2a) so that the "D" input of U11 will go high when the next 5th ALE count occurs.

8-215. The polarity bit line (HSA) is one of the inputs to U3a (pin 2). The other input line is the HCP line from the A/D Converter (U3a, pin 1). To follow the operation of U3a for each type of slope, refer to the 3-bit slope code (HSA, HSB, HSC) in Figure 8-44. For example, when the HSA polarity bit is "0", the HCP line will go high when zero-crossing occurs. The output of U3a goes high with these inputs.

8-216. FRAC Enable. The FRAC is enabled at the beginning of a rundown slope sequence by the logic low

(FRAC Enable) from the μP (U13, pin 31). FRAC Enable and the high from NAND gate U10b drive the output of U4c low. This low enables U4d so that the ALE clock pulses can pass through to the clock input of U11. The FRAC Enable line goes low after the final S − 1 zero-crossing. The load input line of U11 (pin 9) goes low at this time (via U1c, U2d, and U1f) which disables the counter.

8-217. S + 0 Period. The counter (U11) is disabled during rundown when the HCP (High Compare) line going to the μP (U13, pin 1) changes states due to a slope cross-over. The μP lets an S + 0 through after this zero-crossing occurs. The 4-bit latch (U9) outputs the S + 0 command (high on $\overline{HSA}$, $\overline{HSB}$, and $\overline{HSC}$ lines) when a logic high-enable appears on the "G" inputs of U9. The output of NAND gate U10b goes low at this time which makes the output of NOR gate U4c high. This (high) disables NOR gate U4d in the ALE clock path going to U11. When U13 terminates the S + 0 and outputs a slope comand, the output of U10b returns to a logic high. NOR gate U4d is enabled again at this time which allows U11 to resume counting the ALE clock pulses.

8-218. The output of NAND gate U10a is low for an S − 1 slope code. When the HCP line goes high at zero-crossing, a low is applied (via gates U4b, U4a, and U1d) to the enable inputs (pins 4 and 12) of the 4-bit latch (U9). This low disables the latch which turns off the S − 1 slope at zero-crossing rather than the next A/D count, which is done when the other slopes cross zero.

8-219. Glitch Surpressor—U25a. Flip-flop U25a is configured to surpress any glitches that might occur on the Q_D output of U11. Glitching may be possible in U11's flip-flop stages when a D input transition and an ALE clock pulse occur simultaneously.

8-220. RUNUP. Refer to Paragraph 8-54 in the A/D Converter section for background information regarding Runup and to Figure 8-44 for the following discussion. Codes for S ± 4 slopes and S ± 0 dead-count periods are the only slope codes generated by the Inguard μP (U13) during Runup. The enable line to pins 4 and 12 of latch U9 are held high during runup so the data from U13 is passed through to the A/D Converter circuits without enabling commands. The LRU (Low True, Runup) level from NAND gate U10c is an enabling signal for the A/D Converter circuits used during runup. This logic low is on for the entire Runup period (high from U13 pin 30, high on the LOVL line from the A/D Converter, and the high level on pin 11 provide this logic low).

8-221. LOVL. When the LOVL (Low True, Overload) line from the A/D Converter circuit goes low signifying an A/D Converter overload, the following events take place: (1) The LRU output line from U10c goes high terminating the low enable going to the A/D Converter. (2) A logic low on the LOVL line (U13, pin 34) alerts the μP to an overload condition. The μP immediately terminates the runup slope sequence. (3) The μP transmits data to the Outguard μP indicating an A/D Converter overload. (4) A complete rundown is done to remove the voltage charge on the integrator.

8-222. If Autorange is enabled, the Outguard μP sends the proper commands back to the Inguard μP to uprange. If Autorange is disabled, the front panel uprange button must be used to uprange until the overload condition is terminated.

8-223. Use of A30 Board Jumpers and Plugs/Jacks for Troubleshooting. The JMPR's and J's/P's on the A30 Board are for use as troubleshooting aids in solving A30 or A/D Converter malfunctions. Refer to Table 8-11 for an explanation of these troubleshooting aids.

Table 8-11. A30 Board Jumpers and Plugs/Jacks.

Jumper or Jack	Purpose
JMPR1	Unsoldering JMPR1 breaks FRAC's loop so SA signatures can be checked.
JMPR2 JMPR3	If a +5V power supply loading problem occurs, JMPR2 and/or JMPR3 can be unsoldered to localize the trouble.
J31	Supplies a start, stop, and ground for SA Tests.
J32	Provides a choice of three different clocks for J31 SA Tests. There shold be no Jumpers across any of the J31 or J32 pins during normal operations.
J33/J34	1. Run (Normal) position: Jumper connects Pin 1 of J33 to Pin 1 of J34. 2. SA Tests: Jumper connects Pin 2 of J33 to Pin 2 of J34. J34 is looking at the HSA polarity bit. 3. SA Tests: Ground is applied to Pin 3 of J34 when Jumper connects Pin 3 of J33 to Pin 3 of J34. This breaks all loops to provide repetitive pattern for SA tests.
J35	1. Run (Normal) Position: Jumper connects Pin 1 and 2 of J35. The A/D Converter overload line (LOVL) will terminate the runup sequence in this position. 2. Test Postion: Pin 2 of J35 is connected to +5V when Jumper is across Pins 2 and 3 of J35. A/D overload line (LOVL) will not effect runup sequence in this position.
J36	1. Run (Normal) Position: Jumper connect Pins 1 and 2 of J36. 2. Test Position: Pin 2 of J36 is connected to +5V when Jumper is across Pins 2 and 3 of J36. This test position will continuously cycle the A/D Converter to provide a good FRAC test as well as a good A/D Converter test. To implement this test, the 3456A power switch must be turned off and then on again after the P36 Jumper plug is positioned to test.

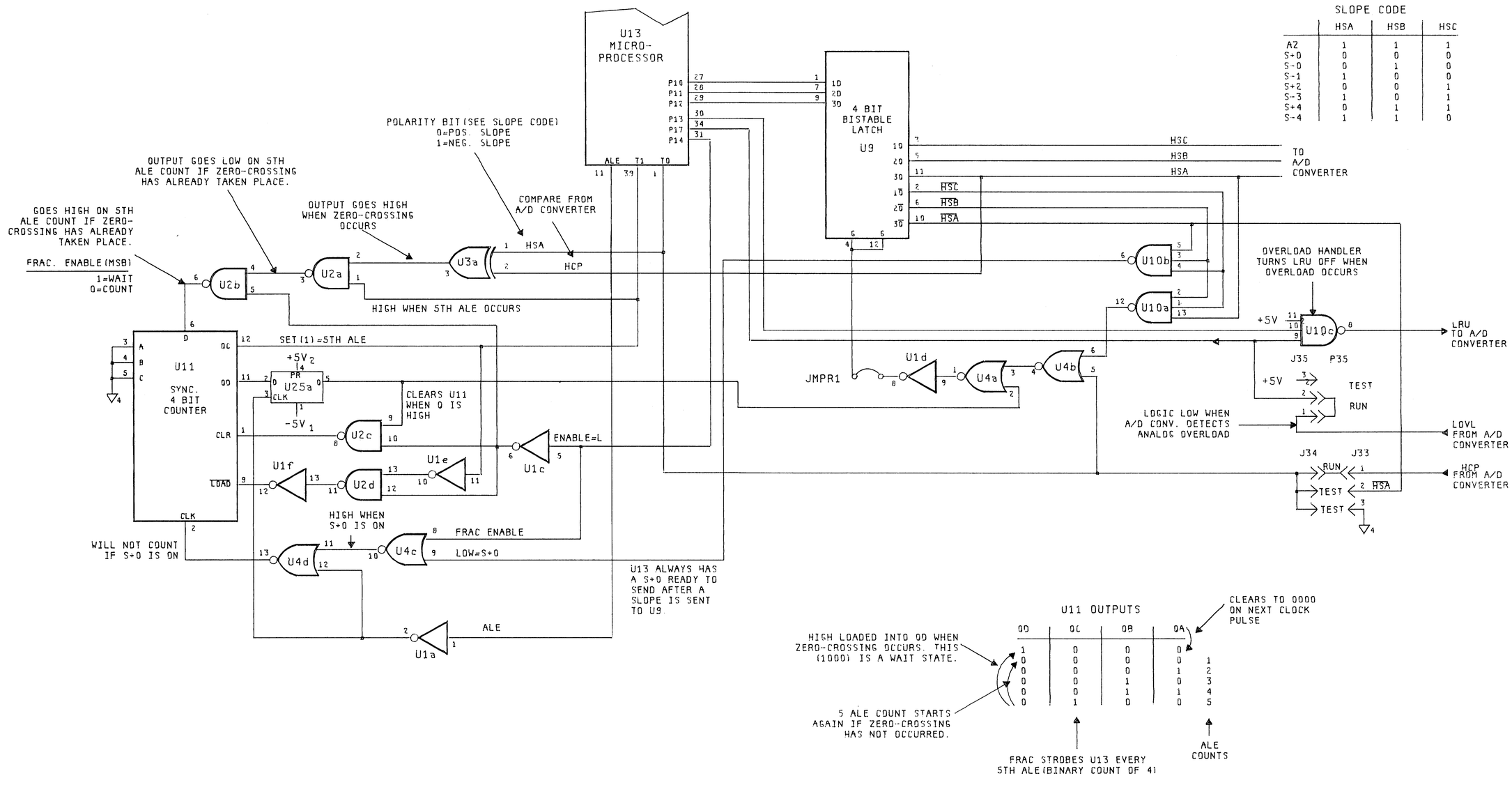

SLOPE CODE

	HSA	HSB	HSC
A2	1	1	1
S+0	0	0	0
S-0	0	1	0
S-1	1	0	0
S+2	0	0	1
S-3	1	0	1
S+4	0	1	1
S-4	1	1	0

QD	QC	QB	QA	
1	0	0	0	
0	0	0	0	1
0	0	0	1	2
0	0	1	0	3
0	0	1	1	4
0	1	0	0	5

Figure 8-44. FRAC Circuits.

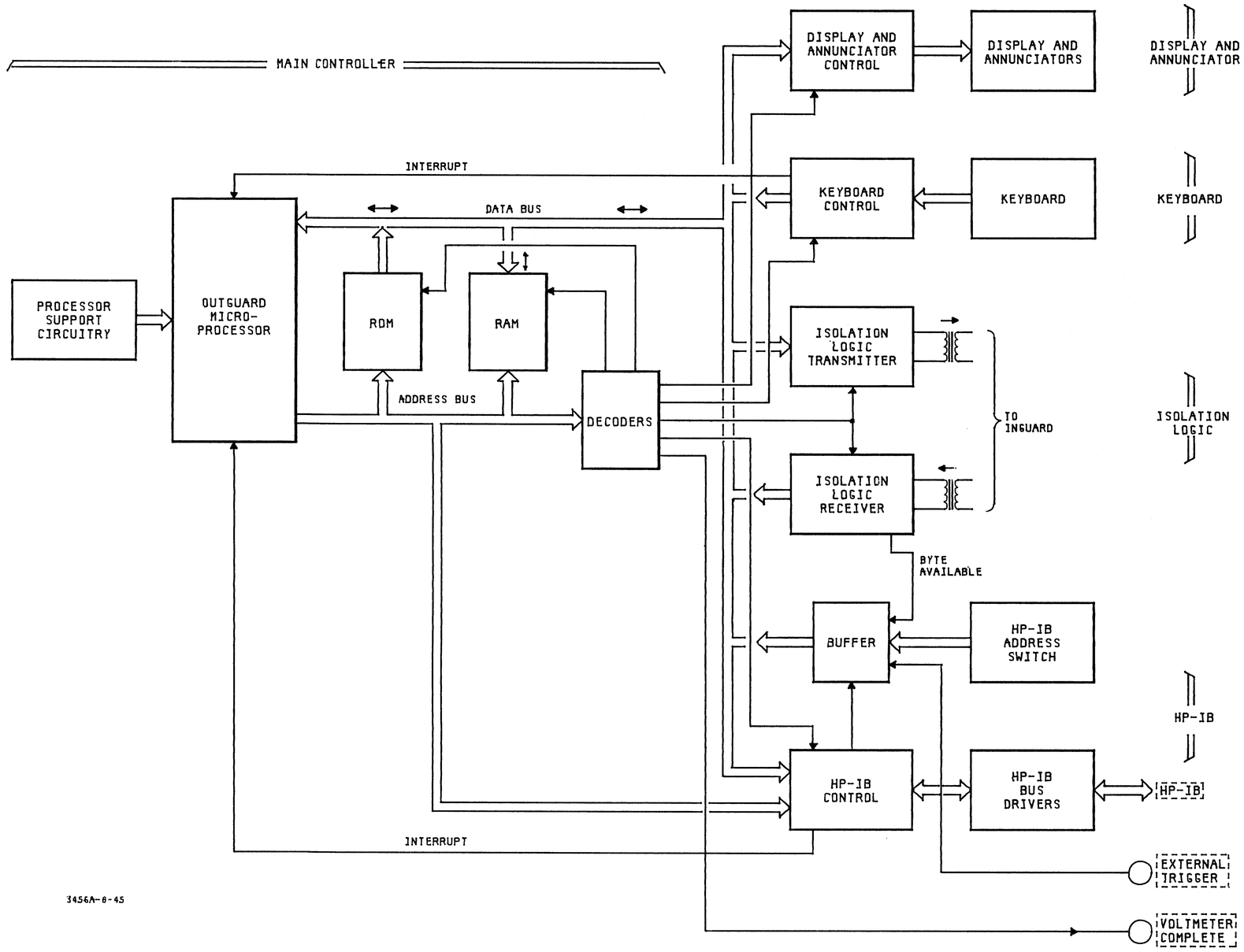

Figure 8-45. Simplified Block Diagram.

8-224. Outguard Section (A3 and A4 Boards).

8-225. General.

8-226. The Outguard Section is divided into the following groups for the theory of operation (see Figure 8-45, Simplified Block Diagram, Outguard).

	Paragraph
a. Main Controller Circuits(A4 Board)	
1. Microprocessor	8-232
2. Clock Generator	8-236
3. Address Bus	8-239
4. Data Bus and Data Transfer	8-240
5. Peripheral Select Decoders	8-247
6. Memory	8-251
b. Isolation Logic Circuits (A3 Board)	8-256
1. Transmitter	8-258
2. Receiver	8-262
c. Keyboard Scan Logic (A4 Board)	8-264
1. Keyboard Scan Circuits	8-266
2. Display Ready Circuit	8-271
d. Display and Annunciator Drive (A4 Board)	8-272
1. Control Circuits for Data Transfer	8-274
2. Display and Annunciator Driver Systems	8-277
3. Sample Rate Indicator Circuit	8-279
e. Keyboard, Display, and Annunciator Circuits (A2 Board)	8-280
f. HP-IB circuits (A3 Board)	8-285
1. HP-IB Interface Adapter	8-287
2. HP-IB Transceivers	8-290
g. External Trigger Circuit (A3 Board)	8-292
h. Signature Analysis (SA) Test Modes	8-295

8-227. The 3456A is a microprocessor-based instrument that uses software rather than hardware to perform many of the instrument's functions. The software programs are stored in the Outguard ROM (Read Only Memory).

8-228. The Main Controller in the Outguard Section controls the measurement operations that are performed by the Inguard circuits. The Inguard microprocessor (μP) is a slave of the Outguard μP. The Outguard μP uses the reset line going to the Inguard μP for a master synchronizing control in addition to sending the Inguard μP measurement operation commands. Communications between the Outguard and Inguard Controllers is through the Isolation Logic (see detailed block diagram on the foldout page preceeding the schematics).

8-229. The Main Controller also manages the communications between the Front Panel Control/HP-IB interface and performs the math calculations.

8-230. A memory mapped I/O address bus technique is used in the 3456A. The I/O peripherals (Display, Keyboard, Isolation Logic, and HP-IB) are treated as memory addresses so that reading or writing can be completed in one memory instruction. Address locations are decoded by 3 to 8 line decoders (A4U6, U17, and U19) to generate strobes (see schematic 9, Main Controller). These strobes enable the device/s addressed by the μP during a read or write routine.

8-231. Main Controller Circuits (A4 Board).

8-232. Microprocessor (A4U15). The μP used in the Main Controller (Outguard) is a Motorola MC68AOOP. The "A" in the device type signifies that its clock rate is 1.5 MHz rather than the standard 1 MHz. The ϕ one and ϕ two pins (U15 pins 3 and 37 respectively) are inputs for the external two-phase, non-overlapping clock that is generated by A4U14. These clock signals are 0 V to +5 V square waves.

8-233. The Main Controller μP communicates with ROM, RAM, and the I/O devices via a 16-bit address bus and an 8-bit data bus. The 16-bit address bus provides the μP with the capability of addressing up to 64K locations. The 8-bit data bus is bidirectional as well as tri-state.

8-234. The following control signals are used by the Main Controller μP:

a. $\overline{IRQ}$ (pin 4)--Interrupt Request. This input line receives Keyboard Interrupt signals from A4U22a, pin 6. $\overline{IRQ}$ (logic low) requests that an interrupt sequence be generated when keyboard information is ready to be sent to the μP.

b. VMA (pin 5)--Valid Memory Address. When high, VMA indicates to all peripheral select circuits that the address bus contains valid information. VMA is retimed (becomes True VMA) before it is used by the peripheral select circuits. See Paragraph 8-245 for the True VMA circuit and timing descriptions.

c. $\overline{NMI}$ (pin 6)-- Nonmaskable Interrupt. This input line is connected to the Interrupt Request output line from the HP-IB Interface Adapter (A3U9, pin 40). The $\overline{NMI}$ line is set low when HP-IB data is available for transfer to the μP.

d. R/$\overline{W}$ (pin 34)--Read/$\overline{Write}$. This output line is used for the RAM, HP-IB, and Isolation Logic circuits to control their Read and Write operations. A high on this line signals these circuits that the μP is in a Read state. A low signals a Write state. A Write Going To Read Stretcher circuit increases the time period that the Write is held true. See Paragraph 8-244 for the Stretcher circuit and timing descriptions.

e. DBE (pin 36)--Data Bus Enable. This input signal tells the μP how long it is supposed to drive the data bus. When DBE is high, it permits data to be output during a write cycle. The data bus drives are disabled internally during read cycles. A DBE Stretcher circuit holds the data longer than the normal 10ns. See Paragraph 8-242 for the Stretcher circuit and timing descriptions.

f. TSC (pin 39)--Tri-State Control. This line is tied to ground by J11/P11 during the run (normal) operation. When the TSC line is tied to +5 V by P11, all of the address lines and the Read/$\overline{\text{Write}}$ line go into the off or high impedance state.

g. $\overline{\text{RST}}$ (pin 40)--$\overline{\text{Reset}}$. This input is used to start the μP from a power-down condition (initializes μP). See Paragraph 8-238 (A4U14 Clock Generator circuit) for a description of how this delayed RST is generated.

8-235. The Inguard μP requires only one +5 V power supply (pin 8). The $\overline{\text{Halt}}$ line (pin 2) is disabled by tieing it to +5 V via a pull-up resistor.

8-236. Clock Generator. The two-phase non-overlapping clock inputs (ϕ1 and ϕ2) required for the μP operation are supplied by the Clock Generator (A4U14). The output frequency (f_o) of U14 is determined by the frequency of the crystal (Y1) connected to pin 2. The phase 1 (ϕ1) and phase 2 (ϕ2) outputs are 1.5 MHz (f_o), 0 V to +5 V square waves that appear at pins 15 and 13 respectively.

8-237. A buffered output (Bus ϕ2, pin 7) connected to the Master Clock line, is used for circuits on both the A3 and A4 boards. A 3 MHz output (2 x f_o, A4U14 pin 5) is used as an input to the circuit that generated DBE.

8-238. The reset function of U14 (pin 12 input, pin 14 output) in conjunction with the Power Supply Ready line generates the reset (RST-L) for the μP. This reset (negative-to-positive transition) initializes the μP at power turn-on. A negative-to-positive transition occurs on the Power Supply Ready line at power-on after (delayed transistion) the Outguard Power Supply (+5 V) is up and ready for operation. The output reset line of U14 (pin 14) is also used at turn-on to initialize the HP-IB Interface Adapter (A3U9).

8-239. Address Bus. The 16-bit Address Bus structure is illustrated in Figures 8-46a, b, c, and d. Each memory location and I/O device has a unique address. The μP must output an address before any data transfer can take place.

a. Bit 15 is the ROM select bit. When this bit is true (high), the address is in ROM space. Bits 14-0 are used for the ROM address field (32 K bit field).

b. If bit 15 is not true (low), then bits 14-11 are the peripheral select bits. By encoding these 4 bits, there are 16 peripheral addresses available when the bits are decoded. The decoded addresses are used as peripherasl select strobes.

c. When bits 14-11 are all low (zero's), RAM space is selected. The remaining bits (10-0) are for RAM address locations so there is room for 2 K (2048) RAM location (one byte per location).

d. When bits 14-11 are 1 0 0 0 respectively, HP-IB is selected. The HP-IB Interface Adapter (A3U9) has 8 working registers. The low bits (2, 1, 0) are used for register select.

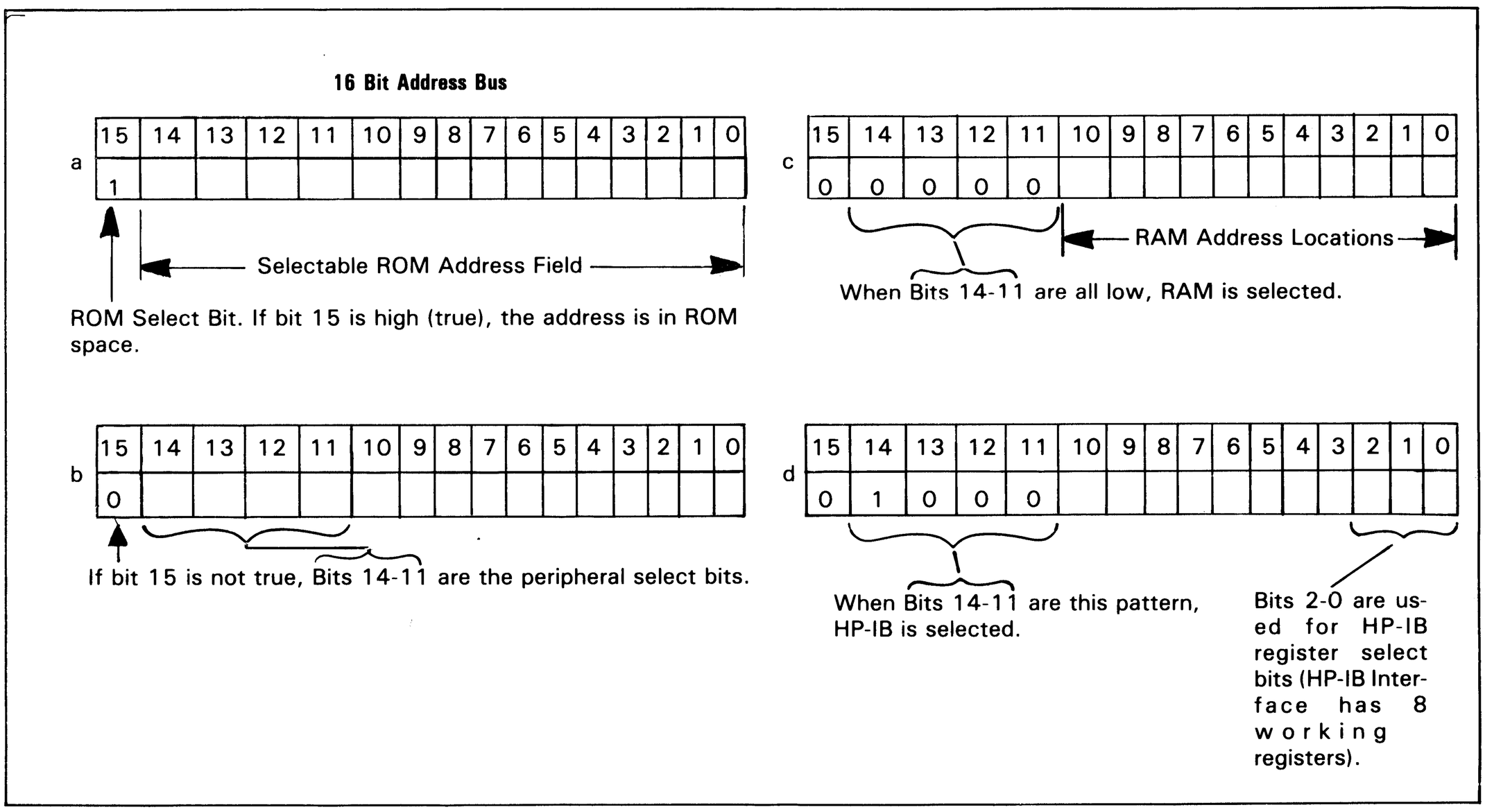

Figure 8-46. Address Bus Structure.

8-240. Data Bus and Data Transfer. An 8-bit, bidirectional, tri-state data bus is used for the transfer of data within the μP controlled Outguard Section. Strobe pulses are used to control the memory and I/O devices as to when they should read data from the bus or write data to the bus. Some of these devices are listeners only (unidirectional, i.e. display), some are talkers only (unidirectional, i.e. ROM's), and some are both listeners and talkers (bidirectional, i.e. RAM's). Only one device is allowed to use the bus at any given time.

8-241. The ROM's and RAM's and some other components used in the 3456A are designed for use with a 1 MHz μP. Because a 1.5 MHz μP is being used, the following speed compensating circuits are used to insure the proper transfer of data: DBE Stretcher, Write Going to Read Stretcher, and True VMA Generator.

8-242. DBE Stretcher. The DBE input to the μP is *normally* the phase 2 (ϕ2) clock. The Bus ϕ2 (1.5 MHz, f_O) and 2 x f_O outputs from U14, pins 7 and 5 respectively, (see Figure 8-50) are used in conjunction with U13b to generate a Stretched DBE. The Stretched DBE holds the data on the line longer ($\cong$50 ns longer than the normal 10 ns) to assure reliable data transfer.

8-243. Refer to Figure 8-47 (DBE Stretcher, Timing Diagram) and to Figure 8-50 (Speed Compensating Circuits) for the following discussion. At T_0 time the preset input to U13b (neg. transition) sets the output (Q) of

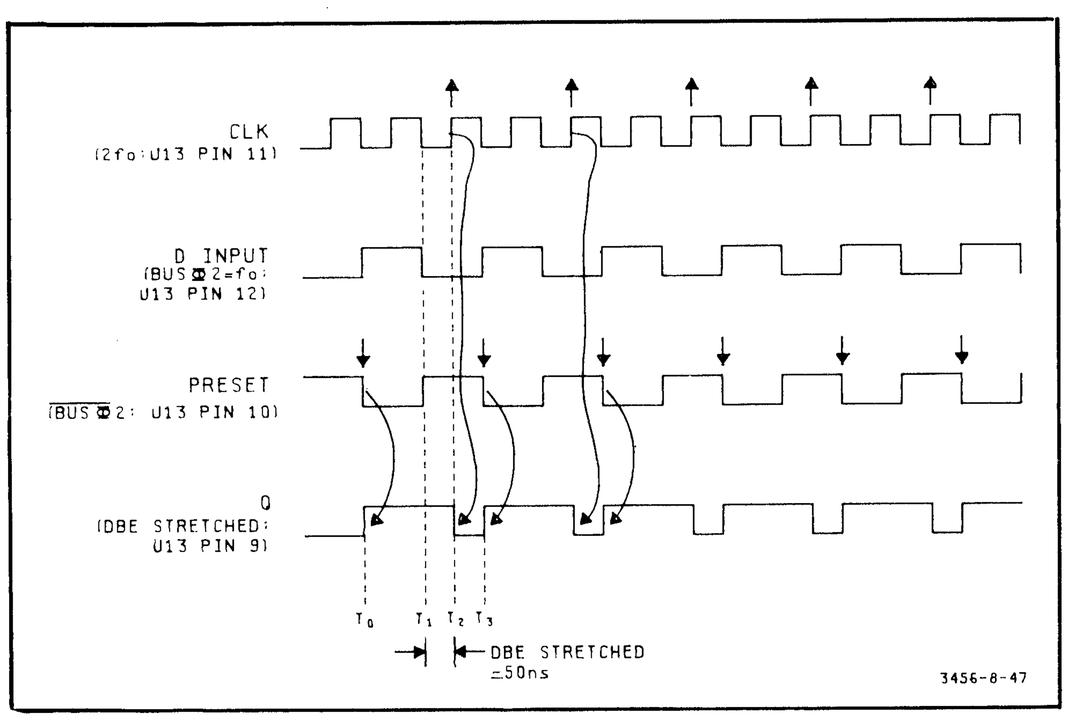

Figure 8-47. DBE Stretcher, Timing Diagram.

U13 high. At time T_2 rather than the normal T_1 time (negative transition of Bus ϕ2), the Q output of U13 goes low: Q's high to low transition occurs when the D input is low, preset is high, and a positive clock transition occurs. The DBE pulse (Q output) is stretched approximately 50 ns (T_1-T_2) by this circuit.

8-244. Write Going To Read Stretcher. Refer to Figure 8-48 (Write Going To Read Stretcher, Timing Diagram) and to Figure 8-50 (Speed Compensating Circuits) for the following discussion. At T_0 time, the R/W line (U15, pin 34) goes low for a Write cycle. This negative transition is delayed by inverter stages U16b and U16c before it is applied to the clear input of U18a. This ac-

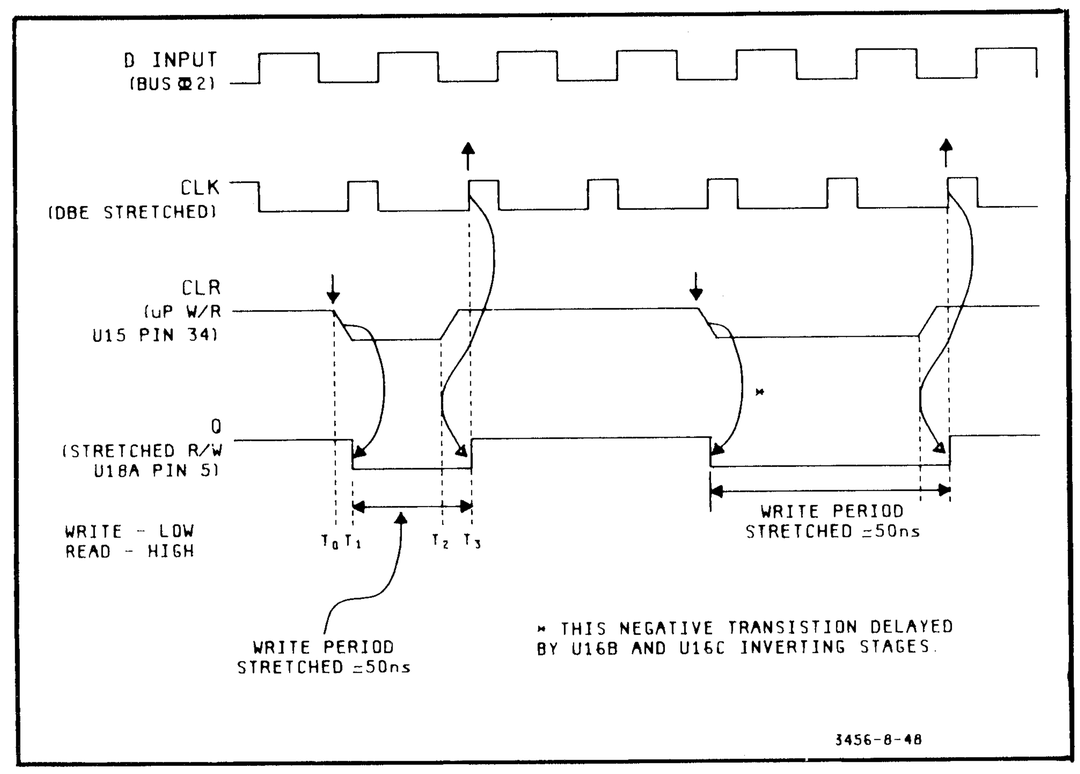

Figure 8-48. Write Going To Read Stretcher, Timing Diagram.

counts for the T_0-T_1 delay at the output of U18a (Q is reset). The Q output is set high at T_3 time when the D input is low, clear is high, and a positive clock transition occurs. The write period is stretched approximately 50 ns by the $\overline{\text{DBE}}$ Stretched clock input.

8-245. True VMA Generator. Refer to Figure 8-49 (True VMA Generator, Timing Diagram) and to figure 8-50 (Speed Compensating Circuits) for the following discussion. The VMA output from the μP has a 50-80 ns wide noise spike that could cause circuit problems. A regenerated VMA (True VMA) is delayed to eliminate the noise spike and shortened to prevent a potential racing problem. Racing is avoided by removing the peripheral select before the stretched DBE/$\overline{\text{DBE}}$ changes state. This allows extra time for the read, write, and data hold.

8-246. Stretched $\overline{\text{DBE}}$ is delayed approximately 10 ns by inverters U16f and U16e and then used as an enabling pulse for NAND gate U23a. The output of U23a (delayed VMA) is applied to U18b's preset input - this sets the Q output (True VMA) of U18b high. The Q output is reset by the Bus ϕ2 clock input before $\overline{\text{DBE}}$ stretched disables the read/write line and the data bus.

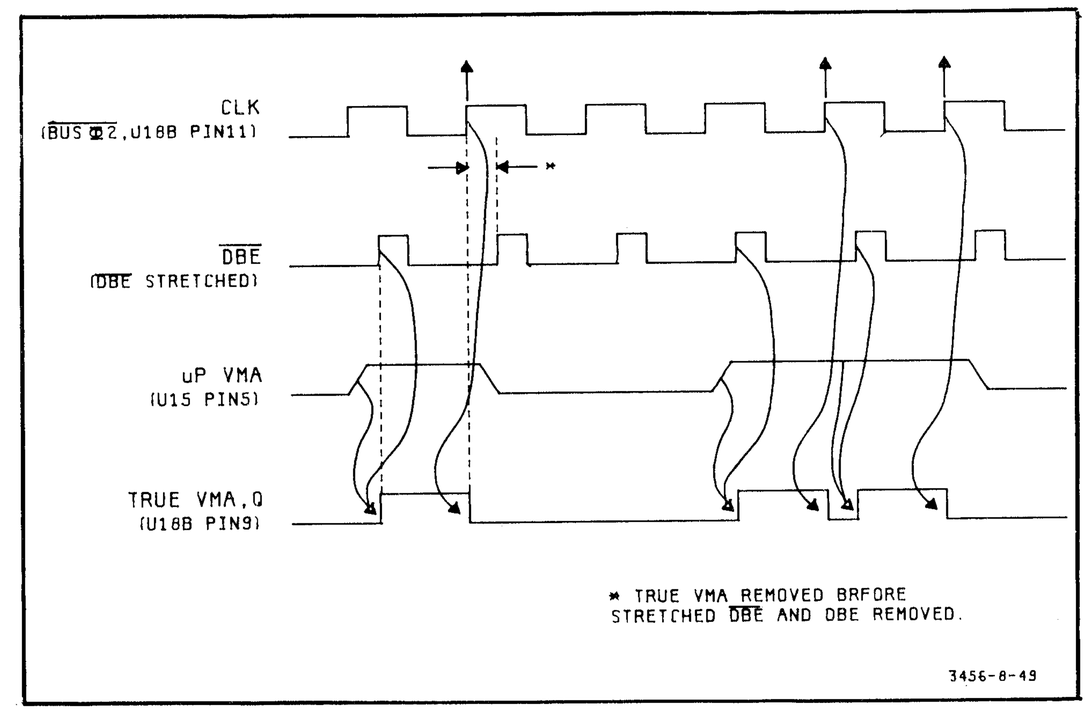

Figure 8-49. True VMA Generator, Timing Diagram.

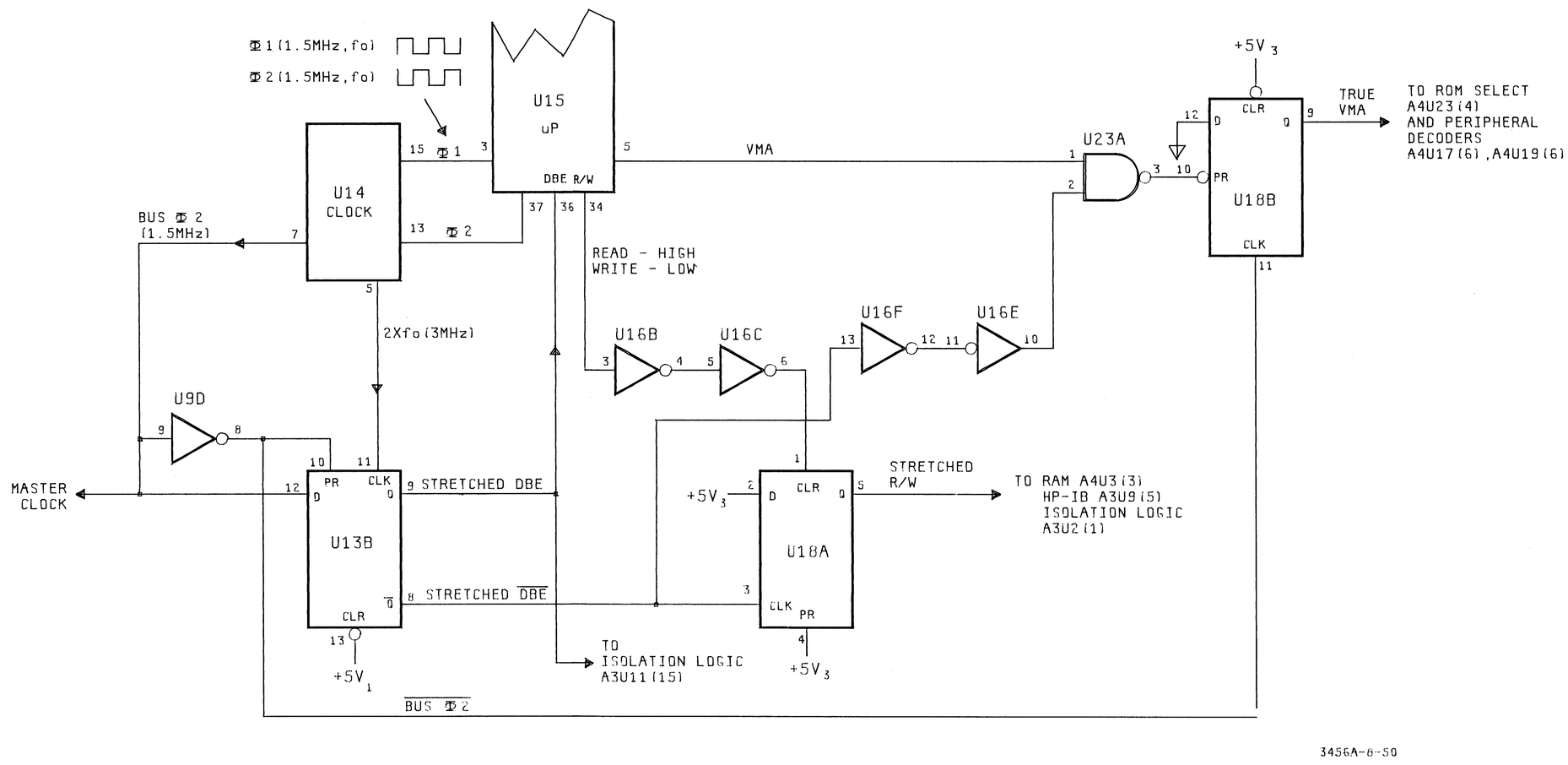

Figure 8-50. Speed Compensating Circuits.

8-247. Peripheral Select Decoders. A peripheral (ROM, RAM, Display, HP-IB, etc.) is selected (or strobed) by a 3 to 8 line decoder (U6, U17, or U19) when the μP is ready to send or receive data. These decoders take a 3-bit binary input and turn it into a potential of 8 output strobe lines but not all of these output lines are used. The address lines and True VMA are the inputs to these decoders. Refer back to Paragraph 8-239 for information on the address bus structure.

8-248. Address line A15 and True VMA are used with NAND gate U23b to generate the ROM Select input for decoder U6 (enable input, pin 4). Address lines 13 and 14 (see Figure 8-51) are select input lines to the decoder.

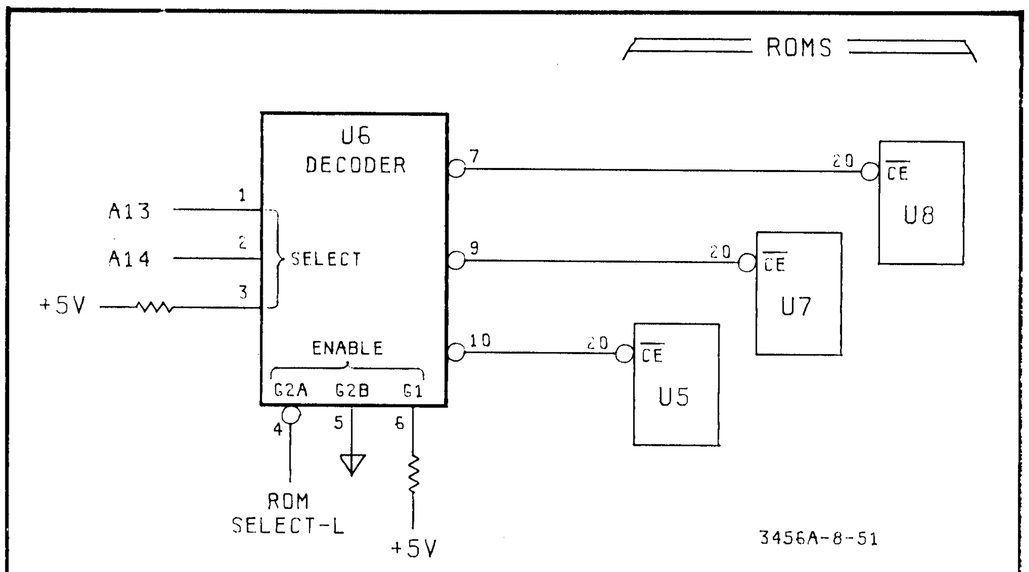

Function Table

Inputs					Outputs		
Enable		Select			$\overline{CE}$		
G1	G2*	1	2	3	U5	U7	U8
H	L	H	L	H	L	H	H
H	L	L	H	H	H	L	H
H	L	H	H	H	H	H	L

*G2 = G2A + G2B.

Figure 8-51. ROM Select Decoder U6.

The output lines (pins 7, 9, and 10) from U6 are connected to the chip select pin ($\overline{CS}$, pin 20) of ROM's U5, U7, and U8. The Function Table in Figure 8-51 summarizes the operation for the U6 decoder. Address lines A0-A12 are used along with the $\overline{CS}$ line to select the desired ROM address.

8-249. A15, A14, and VMA are the enable inputs for decoders U17 and U19 (see Figure 8-52). A11, A12, and A13 are the select inputs for these decoders. The Function Table in Figure 8-52 summarizes the operation of these decoders. Each peripheral has an address that provides a strobe (after decoding) for that peripheral: e.g. if address bits 15 through 11 are 0 1 0 0 0 respectively and True VMA is high, the HP-IB Select line is strobed.

8-250. Decoder, U19 and U17, Output Lines. Following is a description of each output line for both U19 and U17:

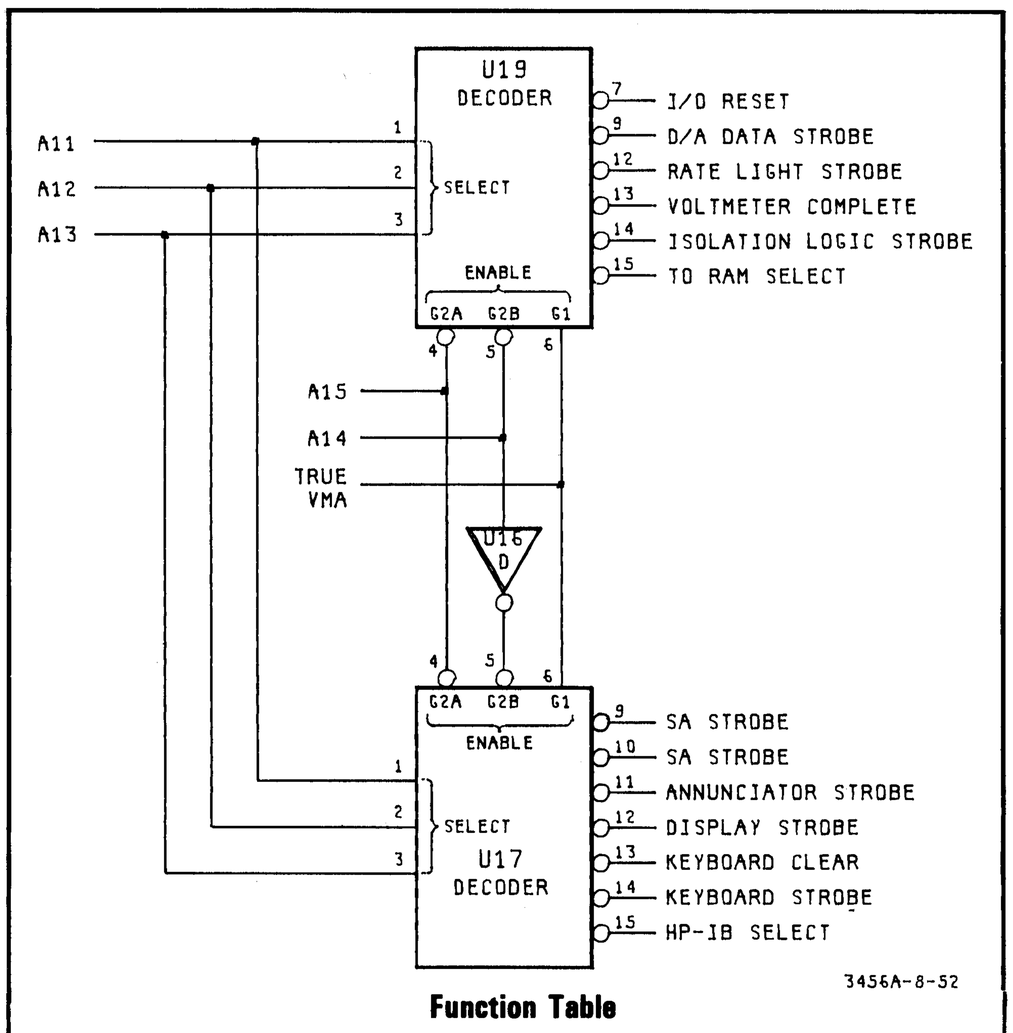

Function Table

Inputs					Outputs							
Enable		Select										
G1	G2*	1	2	3	7	9	10	11	12	13	14	15
H	L	L	L	L	H	H	H	H	H	H	H	L
H	L	L	L	H	H	H	H	H	H	H	L	H
H	L	L	H	L	H	H	H	H	H	L	H	H
H	L	L	H	H	H	H	H	H	L	H	H	H
H	L	H	L	L	H	H	H	L	H	H	H	H
H	L	H	L	H	H	H	L	H	H	H	H	H
H	L	H	H	L	H	L	H	H	H	H	H	H
H	L	H	H	H	L	H	H	H	H	H	H	H

*G2 = G2A + G2B

Figure 8-52. Decoders U17 and U19.

a. I/O Reset (U19, pin7). Serves as a master reset for the Outguard Peripherals: Preset for A3U11b and clear for A3U17a and b in the Isolation Logic circuits. Clear for A4U24a and b in the Write Strobe circuit for both the Display and Annunciator Driver System chips. Clear for U5a in the External Trigger Circuit.

b. D/A Data Strobe (U19, pin 9). Serves as the clock input for A4U28, pin 11. Display and Annunciator information at the D inputs of U28 is transferred to the Q outputs on the positive-going edge of the clock pulse. Also used as a clock input for A4U20a (monostable multivibrator). The $\overline{Q}$ output of U20a (low to high transition) is transferred through tri-state buffer U25 to the μP when U25 is enabled. D/A Data Strobe provides a longer set-up time for the buffered inputs.

c. Rate Light Strobe (U19, pin 12). Serves as the clock input for A4U20D (one-shot multivibrator). U20b drives the front panel "sample rate" LED.

d. Voltmeter Complete (U19, pin 13). Outputs a sync signal (approximately 330ns wide) during the measurement cycle when the 3456A is finished with the input signal. This line is connected to the Voltmeter

Complete Connector (BNC) on the rear of the voltmeter. Input protection diodes are located on the A3 board for this line.

e. Isolation Logic Strobe (U19, pin 14). The Isolation Logic control circuits (both transmitter and receiver) are strobed when the μP wants to transfer data via the Isolation data lines. The Read/$\overline{\text{Write}}$ line from the Outguard Controller determines whether this strobe is used to transmit or receive data.

f. RAM Select (U19, pin 15). This line is strobed when the RAM's are addressed by the μP. The RAM Select line and the Read/$\overline{\text{Write}}$ line are used with the Chip Select (CS), Write Enable (WE), and Output Enable (OE) circuits to control the RAM read-write operations.

g. SA Strobes (U17, pins 9 and 10). These strobe lines are used for the Start and Stop inputs for the signature analyzer during SA testing.

h. Annunciator Strobe (U17, pin 11). This line is used with flip-flop A4U24b to generate a wider write strobing pulse for the Annunciator driver (A4U30).

i. Display Strobe (U17, pin 12). This line is used with flip-flop A4U24a to generate a wider write strobing pulse for the Display driver (A4U29).

j. Keyboard Clear (U17, pin 13). This strobe is used as a clear input to A4U22a and A4U22b to clear the Keyboard Interrupt.

k. Keyboard Strobe (U17, pin 14). This strobe is used as an output enable for both the Key Encoder A4U21 and the Tri-State Buffer A4U25. Encoded keycode information is sent to the μP via the data bus during this strobe period.

l. HP-IB Select (U17, pin 15). The HP-IB Select strobe line is the chip select ($\overline{\text{CS}}$) for the HP-IB Interface Adapter (A3U9).

8-251. Read Only Memory (ROM). The programs (firmware) used to control the measurement operations are recorded into three ROM's (U5, U7, and U8). Each ROM has 64 K bits (8192 words of 8 bits each) of memory. These devices have tri-state outputs that are controlled by their $\overline{\text{CE}}$ (chip enable, pin 20) input.

8-252. Refer to Paragraph 8-239 (Address Bus) and Paragraph 8-247 (Peripheral Select Decoders) to see how a ROM address location is selected. At access time ($\overline{\text{CE}}$), the data in the selected address location is read via the 8-bit data bus into the μP.

8-253. The initial 3456A production runs had six (U1, U2, U4, U5, U7, and U8) 32 K bit ROM's (see Schematic 9, Main controller). Since 64 K bit ROM's are now being used, ROM's U1, U2, and U4 are not used. JMPRA, B, and C (located below A4U6 on Schematic 6) were used to change from 32 K ROM operation to 64 K ROM operation.

8-254. Random Access Memory (RAM). The RAM read/write IC devices (U10 and U11) are used to store measurement data. Each RAM has 1 K byte (1 K x 8 bits) of memory. Only 1400 bytes of the 2 K RAM memory is used for measurement data. The remaining memory (2 K minus 1400) is used as a scratchpad (intermediate data needed for final results, etc.). Four bytes are required for each reading, therefore, the maximum number of readings is 350 (1400 ÷ 4).

8-255. Address bus lines A0-A9 are used to access the RAM memory locations. The RAM's 8-bit I/O data bus lines are tri-state. A RAM is in the read mode whenever its Write Enable line (WE-L, pin 21) is high. The Chip Select line (CS-L, pin 18) and the Output Enable line (OE-L, pin 20) (lines tied together) control the transfer of the output data. A RAM is in the Write mode whenever the WE-L and CS-L control lines are low.

8-256. Isolation Logic (A3 Board, see Schematic 12, Isolation Logic).

8-257. General. The Isolation Logic consists of a transmitter which sends information to the Inguard and a receiver which receives information from the Inguard. Both use transformers for coupling. Each transformer consists of windings on a toroidal core and a single wire passing through the center of the core for coupling. Transformer coupling allows the Outguard ground which is connected to earth ground to be isolated from the Inguard ground which is connected to the low input terminal.

8-258. Transmitter. Data from the Outguard μP (A4U15) is transferred across the 8-bit data bus to A3U10, a parallel to serial shift register. Data is loaded into U10 when a high to low transition occurs on its load/shift input (pin 1). This transition is generated by U15b when a high occurs on its clear input (pin 13); this sets the Q output of U15b (pin 9) low. Serial data shift out of U10 occurs (at the clock rate) when the load/shift input to U10 goes high. This occurs when the Read/$\overline{\text{Write}}$ line (D input to U15b) goes low (inverted by U2a) followed by a low to high transition on the Isolation Logic Strobe line (clock input to U15b).

8-259. An extra bit (byte-available bit) is added to the 8-bit byte by U15a. Flip-flop U15a is always reset to one so that this extra bit is always a "one". This is the last bit in and will always be the first bit transmitted out. The byte-available bit tells the Inguard μP that data is ready. The Q and $\overline{\text{Q}}$ outputs of U15a are fed to parallel connected gates to provide the required drive for T1's primary. The 9-bit data group is gated through U19 by the clock appearing at the output of U13a.

8-260. The 1.5 MHz Master Clock (Bus $\phi 2$) is divided by two in U11b and the Q output of U11b (Bus $\phi 2 \div 2$) is divided again by two in U17a (Bus $\phi 2 \div 4$). The propagation delay time of inverters U6b and c and U2b and c is used to delay the Bus $\phi 2 \div 2$ clock at U13a, pin 2 to compensate for the clock delay through U17a.

8-261. Presettable counter, U1, is a 4-bit counter that is configured as a count-to-nine circuit (uses only the Q_A and Q_D outputs). At the count of nine, the Q_A and Q_D outputs are high. These highs (through U3a and U6d) causes the output of U13b to go low. This low is used as as clear for U15b, U17a, and U1. The Q output of U15b goes low at this time putting a low on the J and K inputs of U17a (this stops U17's toggle counting). When U17a is cleared, its $\overline{Q}$ output goes high which disables gate U13a. The clock path to U10, U15a, U19, and U1 is disabled until the next write command occurs.

8-262. Receiver. The serial data received from the Inguard Logic through transformer T2 consists of a group of 9 bits with the first bit always a "one". The receiver uses this first bit to generate Byte Available. Clock and data are derived from the serial data by U21, a transistor array circuit. This clock is used to shift the data into U22, a serial to parallel shift register, and is also used by the Byte Available flip-flop U17b. The Q output of U17b goes high on the clock pulse following the shifting of bit "one" to pin 13 of U22/pin 11 of U17b. This high is used to tell the Outguard μP that a data byte is available on the data bus. The first bit is then shifted out of U22 (overflow) leaving the eight-bit data byte on the parallel output of U22.

8-263. The Byte Available pulse from U17b goes to A3U16, pin 18 (data line D7, see Schematic 13, HP-IB Logic). The Byte Available pulse is transferred through U16 to the Outguard μP when the ASE enable line (pins 1 and 19) goes low. An enable on the ASE line occurs when the μP scans U9 via the A0-A2 address lines. When the μP receives the Byte Available pulse, the following sequential events take place: (1) the DBE (Data Bus Enable) line goes high which clears flip-flop U11a; (2) the Read line goes high and the Isolation Logic Strobe line goes low. The Read signal (inverted by U2a) and the Isolation Strobe pulse are applied to AND gate U13a. The output of U13a is used as an enabling level for tri-state buffer U20, a clock for flip-flop U11a, and a clear for flip-flop U17b. The 8-bit byte is transferred from buffer U20 to the μP and the U22 shift register is cleared at this time.

8-264. Keyboard Scan Logic (A4 Board, see Schematic 10, Keyboard Scan Logic, Display and Annunciator Drive; A2 Board, see Schematic 11, Keyboard, display and Annunciator).

8-265. General. The main sections in the Keyboard Scan Logic are a X-Y matrix (front panel switches), a matrix encoder (A4U21 and U22b), a keyboard interrupt circuit (A4U22a), and a tri-state data buffer (A4U25). A keyboard interrupt signal is sent to the Outguard μP whenever a front panel key is pressed. The μP responds by strobing in the encoded keyboard information.

8-266. Keyboard Scan Circuits. Figure 8-53 illustrates a basic 4x5 switch matrix with a capacity for decoding

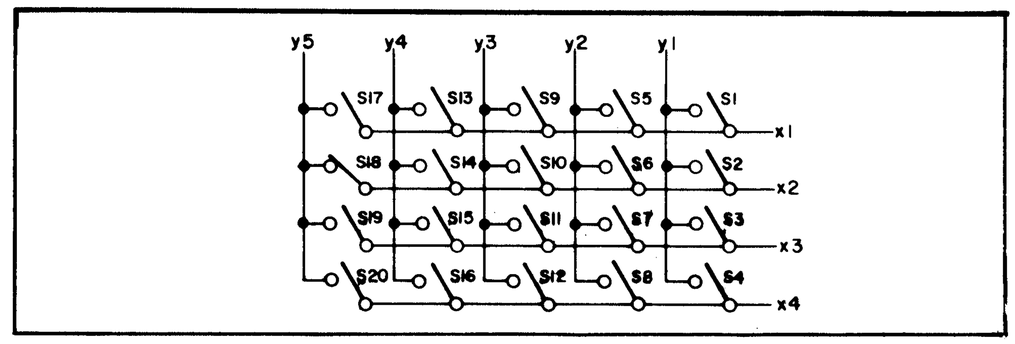

Figure 8-53. 4 x 5 Switch Matrix (S18 Closed).

20 switches (only one switch can be closed at a time). Switch S18 is closed in the illustration; this closure connects the X2 and Y5 matrix lines. The 3456A has 37 front panel switches (excluding the off-on lines switch) so a 4x10 matrix with a capacity of 40 is required (see Figure 8-54).

8-267. The X1, X2, X3, and X4 matrix lines are tied to the A4U21 Key Encoder (20 Key Encoder) pins 12, 11, 9 and 8 respectively. The Y1, Y2, Y3, Y4, and Y5 lines are tied to U21 pins 1, 2, 3, 4, and 5 respectively. The Y1'-Y5' lines are also tied to U21 pins 1-5 but their connections are through resistor-diode isolation networks (R16-R27 and CR3-CR7, see Schematic 10). The resistor-diode network (along with U26 and U22b) expands the 20-key encoder system to a 40-key system. The Y1'-Y5' lines are also connected to U22b via U26, an 8-input OR gate (unused inputs tied to +5 V). Flip-flop U22b outputs a high to pin 14 of buffer U25 (goes to data line D5) whenever a Y' key is pressed. This arrangement provides the μP with the necessary decoding capability for a 40 key encoder (high on data line D4 = Y' key; low = Y key).

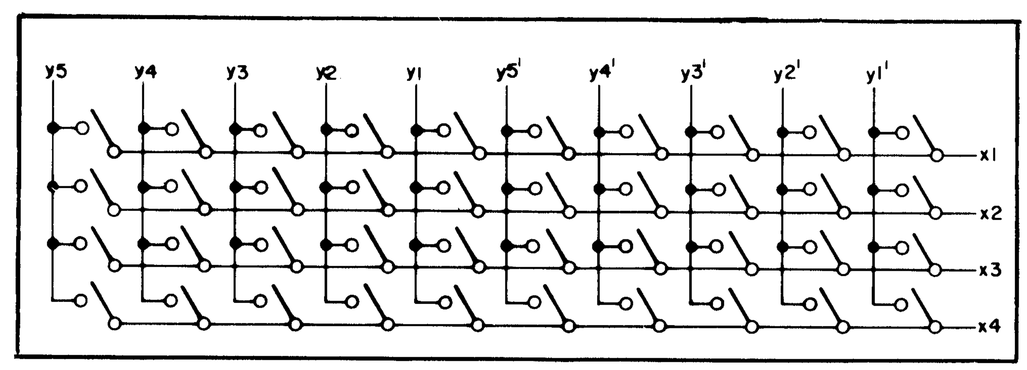

Figure 8-54. 4 x 10 Switch Matrix On A2 Board.

8-268. Pin 13 of Encoder U21 goes high whenever a front panel switch is pressed. This output goes to buffers U27b and U27a which provides the drive for the clock inputs to U22a and U22b (U21 is CMOS with limited drive capability). The $\overline{Q}$ output of U22a is set low (Keyboard Interrupt) by a high on its clock input due to the PR and D inputs being tied to +5 V. A high on the clock input of U22b will set its Q output high if a high appears on its D input (high on D when Y' key has been pressed). A low pulse on the Keyboard Clear line resets U22a and b after the keyboard switch information has been strobed into the μP.

8-269. A low on the Keyboard Strobe line going to U21, pin 14 and U25, pins 1 and 19 dumps the contents of U21 to U25 and then dumps U25 to the data bus where the μP reads the key codes. The pull-up resistor (R14),

on this Keyboard Strobe line assures that this line is high when it is not being strobed.

8-270. The 1.0 μF capacitor (6) on pin 7 of U21 is used with its internal key debounce circuit. The .1 μF capacitor on pin 6 is used with the 2-key roll-over feature provided by U21. If one key is pressed and a second key is pressed before the first is released, the 2-key roll-over will sense the second key being pressed.

8-271. Display Ready Circuit. A monostable multivibrator, U20a, generates the Display Ready signal that tells the μP when it is alright to write to the display (A4U29) or annunciator (A4U30) drivers. A low on the D/A Data Strobe line sets the $\overline{Q}$ output of U20 low. After a 100ms delay period, the $\overline{Q}$ output goes high. This high is transferred through the tri-state buffer (U25) when U25 is enabled by the Keyboard Strobe line. The resistor (R11) and capacitor (C8) that are tied to pins 15 and 14 respectively of U20a, are timing components.

8-272. Display and Annunciator Drive (A4 Board, see Schematic 10, Keyboard Scan Logic, Display and Annunciator Drive).

8-273. General. Display and Annunciator data is transferred from the Outguard μP to an octal latch (A4U28) via the 8-bit data bus. This data is then strobed through the octal latch to the tri-state inputs of the Display and Annunciator drivers U29 and U30. A write strobe to either the Display or Annunciator driver loads the data into the selected driver. The drivers have all of the required circuitry to directly drive the Display and Annunciator LED's.

8-274. Control Circuits For Transfer Of Data To The Display and Annunciator Drivers. The data present on the 8-bit data bus is applied to the D inputs of Octal Latch U28 but this data is not transferred to the Q outputs until it is clocked through by the D/A Data Strobe (pin 11). With the enable input (pin 1) tied to ground, data is transferred on the positive going edge of the signal applied to the clock input.

8-275. The data from U28 is written to only one driver at a time by a low input on either the Display (U29) or Annunciator (U30) Write Strobe line (pin 8). The Write Strobe to U29 is generated by U24a when the Display Strobe line (clk input, pin 3) goes low. The $\overline{Q}$ output of U24 goes low when this occurs. The $\overline{Q}$ output of U24a (pin 6) is tied to its D input (pin 2). When this toggle configured flip-flop is written to twice, set ($\overline{Q}$ low) and clear ($\overline{Q}$ high) occurs. The I/O Reset line (pin 1) goes low at turn-on or when the front panel reset button is pressed. The $\overline{Q}$ output is set high when this occurs. The toggle flip-flop (U24b) that generates the write strobe for the Annunciator driver functions in the same manner as U24a. Signals on the Annunciator Strobe line provide the clock input for U24b.

8-276. The Display and Annunciator Strobe pulses occur 100 ms after the data is strobed to the output of the U28 octal latch. This delay is set by the U20a, a monostable multivibrator (see Paragraph 8-271 for the circuit description). The U24a and U24b toggle flip-flop circuits ensure that the data set-up, hold time, and write strobe are long enough for the U29 and U30 drivers.

8-277. Display and Annunciator Driver Systems. The A4U29 and U30 LED Driver Systems read data directly from the 8-bit I/O data bus (via latch A3U28) and then drive the front panel LED's directly. These IC's can drive the LED's directly because all of the required circuitry (multiplex scan, memory, drivers, etc.) have been integrated on these chips. Driver U29 drives all of the digits in the instrument's display (A2DS2-DS7 and DS9, see Schematic 11, Keyboard, Display, and Annunciators). Driver U30 drives all of the annunciator LED's (A2CR1-CR8 and CR10-CR33) except CR9 (Rate LED) in addition to the polarity/OL (Overload) display (DS1) and the ± for the exponent display (DS9). The drive signals to the front panel LED displays consists of strobe pulses. The multiplex scan circuits determine the rate that these output lines are strobed.

8-278. Data lines DO-D7 and the write strobe lines are the only inputs to U29 and U30. The Shutdown mode input pin (pin 10) on both U29 and U30 are tied to +5 V (normal operation) to disable this feature. Eight of U29's output pins (pins 15-18 and 20-23) drive the anodes of the display LED's and the remaining eight pins (pins 1-4 and 24-27) drive the cathodes. Seven of U30's output pins (pins 15-17 and 20-23) drive the anodes of the annunciator LED's and the anodes for A2DS1 and DS8. The seven remaining output pins of U30, that are used, drive the cathodes.

8-279. Sample Rate Indicator Circuit. A monostable multivibrator (U20b, see Schematic 10) is used to drive the front panel Sample Rate Indicator LED (A2CR9) on the front panel. This circuit is driven by the Rate Light Strobe whenever the front panel displays and annunciators are updated. The resistor (R9) and capacitor (C5) tied to pins 7 and 6 of U20b are timing components. The 330 ohm resistor (R23) tied to pin 12 of U20b is used to limit the current to A2CR9.

8-280. Keyboard, Display, and Annunciator Circuits (A2 Board, see Schematic 11, Keyboard, Display, and Annunciators).

8-281. Refer to Paragraph 8-266, Keyboard Scan Circuits, for the circuit description of the front panel switches, S1-S37.

8-282. Seven-segment LED displays with right hand decimal points (dp) are used for all of the digit readouts (A2DS2-DS7 and DS9). The internal connections for these LED segments are shown for DS2 in Schematic 11 (e.g. the cathode of segment a (top horizontal bar) is connected to pin 1 of the display). Refer to Figure 8-55,

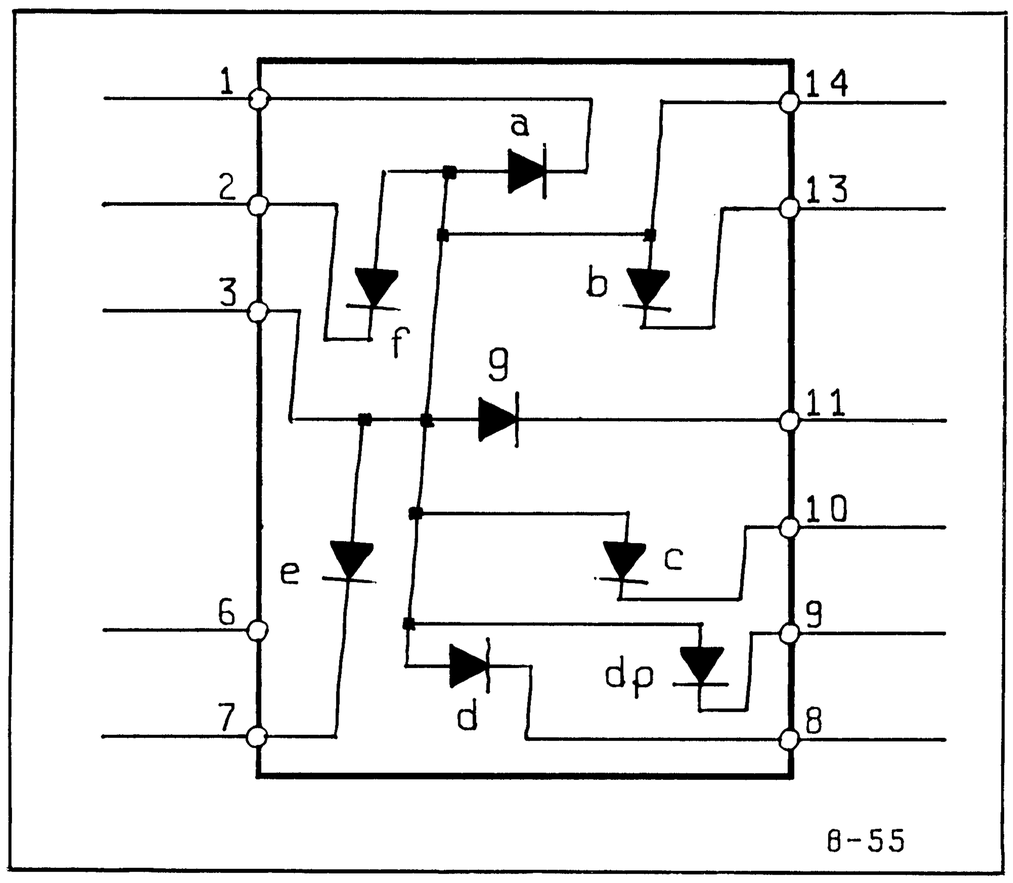

Figure 8-55. Internal Circuit Diagram For A2DS2-DS7 and DS9.

an internal circuit diagram for these displays, for additional information regarding the display operation. Note that all of the anodes of each displays are tied to pin 3 so that the position (DS2 or DS3 or etc.) of the digit to be displayed is selected by the digit (anode) drive lines from A4U29 that are connected to the seven displays. (Also note that the line connected to P4, pin 26 (from pin 18 of A4U29) is not used). The numerical value to be displayed, in the selected position, is determined by the segment (cathode) drive lines from A4U29 that are connected to the display cathodes.

8-283. Five-segment LED displays with right hand decimal points are used for the A2DS1 and DS8 displays. Refer to the illustration in Schematic 11 for DS1 and also to Figure 8-56 for the external and internal

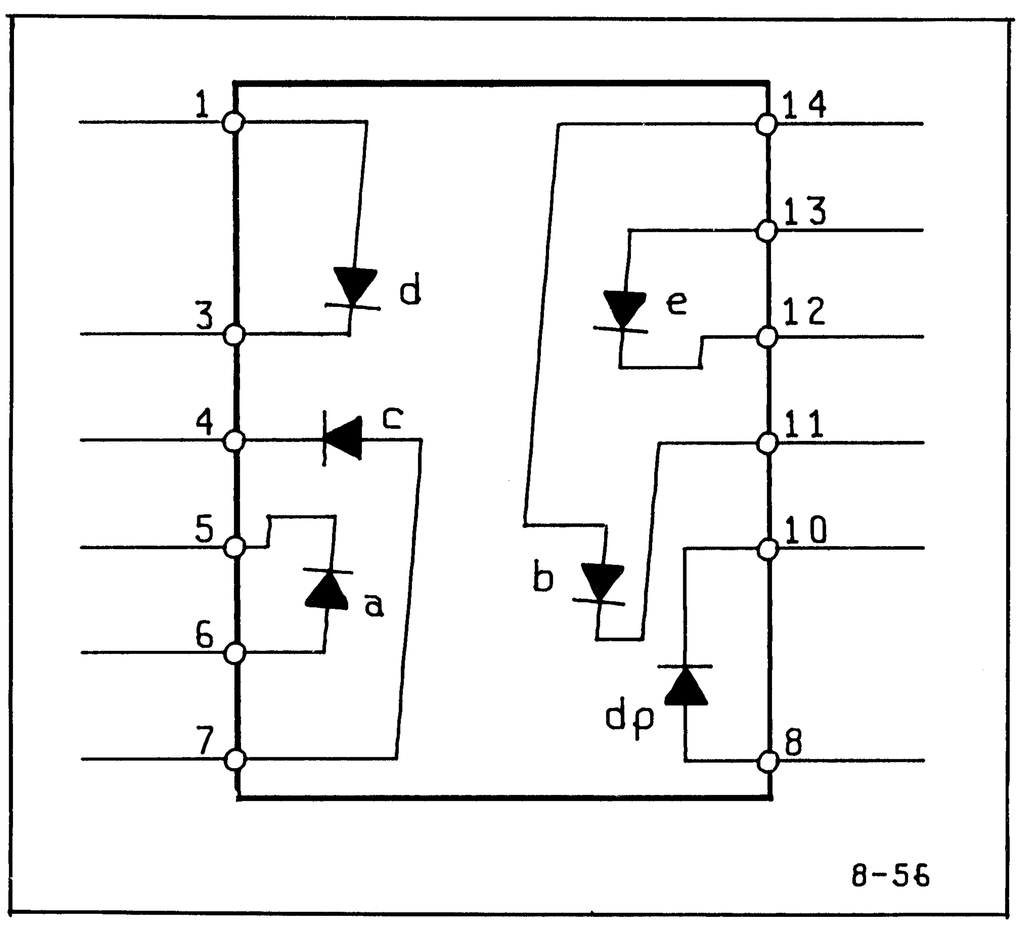

Figure 8-56. Internal Circuit Diagram For A2DS1 and DS8.

connections used for these displays. The DS8 display is rotated 180 degrees before it is inserted into the display socket. This is done so that the only segments used in DS8, the c, d, and e segments (+ and −), are closer to the DS9 exponent digit to which they apply.

8-284. Individual LED's are used for the Annunciator status indicators. The Annunciator LED anodes and cathodes are connected and driven in a matrix fashion like that used for the digit displays.

8-285. HP-IB (A3 Board, see Schematic 13, HP-IB Logic).

8-286. General. The HP-IB Logic provides the means for the Main Controller to interface with the HP-IB (Hewlett-Packard Interface Bus). The HP-IB allows the 3456A to communicate with other HP-IB compatible instruments. The logic circuit consists of the following:

a. Interface Adapter (A3U9).

b. Address-Select Switch (A1S1).

c. Bidirection Communication Link (Bus Transceivers U12 and U7, DIO 1-DIO 8 Data Bus).

d. Data Byte Transfer Control (Bus Transceiver U8 and Handshake Lines).

e. Interface Management Control (Bus Transceiver U14 and Management Control Lines).

Refer to Appendix A of this manual for additional information on the HP-IB.

8-287. Interface Adapter (A3U9). The HP-IB Interface Adapter is interfaced with the Main Controller (A4U15 μP) via the 8-bit bidirectional data bus (DO-D7), address lines A0-A2, and four Control lines (HP-IB Select, R/W, RST, and NMI). Clock for U9 is supplied by the Main Controller circuits (A4U14). The interface between U9 and the HP-IB is via DIO 1-DIO 8 bus (Data Input/Output) and the Handshake (3 lines) and Management Control (5 lines) lines. Four tri-state Bus Transceivers (A3U12, U7, U8, and U14) serve as the bus drivers for these 16 HP-IB lines.

8-288. The U9 Interface Adapter has 8 working registers which are addressed by the Main Controller μP via A0-A2 address lines. The Main Controller generates a low on the HP-IB Select line (chip select) when data is read into or out of U9 over the 8-bit bidirectional data bus (D0-D7). The Main Controller sets the R/$\overline{W}$ (Read/$\overline{\text{Write}}$) line high when it is reading data from U9 and sets the line low when it is writing data to U9. The NMI (Nonmaskable Interrupt) line is used by U9 to interrupt the Main Controller μP when it has data to send (data from its Interrupt Status Register). The NMI line stays low until the μP reads the data. A low to high transition on the RST (Reset) line initializes U9 at power turn-on. This transition is delayed to assure that the +5 V power supply is up and ready before initialization occurs.

8-289. The Main Controller μP scans U9 via the A0-A2 address lines. Tri-State Buffer U16 is enabled during these scan periods when the ASE (Address Switch Enable) line at U9, pin 4 goes low. The address code set by the A1S1 switches is read by the μP (via the 8-bit data bus) at this time. The position of switch contacts 1-5 is used to set the HP-IB address for the 3456A. Switch 7 is closed when the 3456A is to be used as a talk-only device. Data lines D0-D5 are pulled high by the 10 K pull-up resistors (R8-R13). These lines are set low (ground) when the associated address switches are closed.

8-290. Bus Transceivers A3U12, U7, U8, and U14. Each Bus Transceiver has four independent tri-state driver/receiver pairs. The direction of the data flow for each pair is controlled by its corresponding send/receive input. The disabled output of the pair is forced to a high impedance state. Pins 4 and 12 (the Pull-Up Enable inputs) of each transceiver are tied to ground which puts the drivers in an open collector configuration. Figure 8-57 lists the S/R, Data, and Bus connections for each transceiver pair and also gives a truth table showing the direction of the Information Flow based on the logic level applied to the S/R input.

8-291. The Talker/Listener line (pin 27) from U9 drives pins 1, 7, 9, and 15 to U12 and U7 and pins 1, 7, and 9 to U8. When this line is high, data flows from U9 through the transceiver to the bus. When U9 pin 27 is low, the data flows into U9. The EOI line connected to U8 is controlled by the T/$\overline{R1}$ line from U9. Transceiver U14 is programmed (pins 1, 7, and 9 to ground. Pin 15 to +5 V) so that information flow on the REN, ATN, and IFC can only be from the bus to U9. The flow for the SRQ line can only flow from U9 to the bus.

8-292. External Trigger Circuit. (A3 Board, see Schematic 13, HP-IB Logic). The External Trigger Circuit is not part of the HP-IB circuit but it does use the same tri-state buffer used by the HP-IB circuit. The input to this trigger circuit is via the External Trigger input connector (J41, BNC) located on the rear panel. The input line is tied to +5 V via pull-up resistor R2. Series resistor R3 and diodes CR3 and CR4 are used for input protection.

8-293. When a negative trigger pulse is applied to J41, it is inverted by U4a and used to clock the high appearing at the D input (pin 2) of U5a to the Q output (pin 5). This high is fed to pin 16 of tri-state buffer A3U16 and strobed thorugh to the Main Controller μP when the ASE line (enable, pins 1 and 19) goes low. The ASE line goes low when the Main Controller μP scans U9 via its A0-A2 address lines.

8-294. Refer to Paragraph 8-250(d) for a description of the Voltmeter Complete output line.

8-295. Signature Analysis (SA) Test Modes (A4 Board, see Schematic 9, Main Controller). The Main Controller has four jack/plug connections, each of which can be changed for SA troubleshooting. The node signatures obtained during the SA tests are used to identify faulty logic nodes for troubleshooting to the component level. A choice of different strobe connections is available for the start/stop input to the SA test equipment. Following is a brief description of each SA test mode and the start/stop strobe points used for these tests.

a. *J9/P9—RUN/ROM SA.* Plugs P9 and P12 must both be in their ROM SA position and the Data Bus Break, E5, must be removed before ROM SA tests can be made. The other plugs (P10 and P11) must be in their RUN positions. Plug P9 connects data line D5 and D7 to ground through diodes CR1 and CR2. Data lines D0-D4 and D6 are tied to +5 V via the 100 K pull-up resistors (R5). Plug P12 breaks the VMA signal path from U18b to the U17 and U19 Line Decoders.

b. *J10/P10—RUN/RAM SA.* Plug P10 must be in its SA position and P9, P11, and P12 in their RUN position and E5 inserted in it socket before RAM signatures can be taken. Plug P10 breaks the A3 address line path to the U8 ROM and grounds the A3 line to U8 when it is positioned in the RAM SA position.

Pin Connections

Pair No	Input Control S/R	Data	Bus	PUE
A	1	2	3	4
B	7	6	5	4
C	9	10	11	12
D	15	14	13	12

S/R = Send/Receive
PUE = Pull-Up Enable

Truth Table

S/R	PUE	Info. Direction Flow	Comments
0	X	Data ← Bus	— —
1	1	Data → Bus	Active Pull-Up
1	0	Data → Bus	Open Collector

X = Don't Care
Positive True Logic

Figure 8-57. Quad Bidirectional Transceiver (HP-IB), Pin Configuration and Truth Table (HP-IB).

c. *J11/P11—RUN/TSC.* The RUN/TSC (Tri-State Control) test is not presently being utilized for SA tests. Plug P11 connects the TSC pin of the μP to ground when it is in its RUN position and connects the TSC pin to +5 V in the TSC position.

d. *J12/P12—RUN/ROM SA.* Plug P12 and P9 must both be in their ROM SA position and the Data Bus Break, E5, must be removed before the ROM SA tests can be made. See Paragraph 8-295(a). J9/P9 RUN/ROM.

e. *TP2 and TP3.* TP2 A and B (SA Strobe 1), TP2 C and D (SA Strobe 2), and TP3 A and B are used for the Start and Stop inputs to the external SA test equipment. Refer to the Service Group troubleshooting sections to determine which TP's to use for these start and stop signals.

f. *TP3-C—SA Clock.* Test point TP3-C is used for the clock input to external SA test equipment. The signal at TP3-C is a 0 V to +4 V square wave occurring at a frequency of 1.5 MHz.

Refer to the Service Group troubleshooting sections for guidance in setting up these jumper/plugs for SA testing.

8-296. Power Supplies (A10 Board—Inguard Power Supply and A3 Board—Outguard Power Supply, see Schematic 14, Power Supply).

8-297. For isolation purposes, the 3456A has two separate power supplies, one for the Inguard circuits and the other for the Outguard circuits. The same transformer (T1) is shared by these two power supplies.

8-298. Inguard Power Supply. The Inguard power supply provides four regulated voltages (+5 V, +15 V, −15 V and −18 V) and one unregulated voltage (+33 V) for the operation of the Inguard circuits. An integrated circuit voltage regulator is used for each of these regulated voltages. The input side of each regulator has a jumper that can be used for circuit isolation during troubleshooting. The acceptable input voltage range (low and high voltage) to the regulators is shown above each jumper. To obtain proper regulation, the input voltage to the IC regulators must be at least 2 volts greater than the regulated output voltage.

8-299. The acceptable voltage range and the maximum design current for each voltage line is given in the A20 Board block to the right of the A10 board schematic.

8-300. +15 Volt Circuit. One half of CR1 is used for the full-wave rectifier input to voltage regulator U2. A 30 V zener diode (CR3) is used for input voltage protection for the regulator. The 18 V zener diode (CR7), that is connected to the regulator's output, provides overvoltage protection for the +15 V line going to the Inguard circuits.

8-301. −15 Volt Circuit. The other half of CR1 is used for the full-wave rectifier input to the −15 V voltage regulator (U3). Zener diodes CR4 and CR11 are used for overvoltage protection. Note that the zener diodes and electrolytic capacitors in this negative supply circuit are connected opposite to what is done in the +15 V circuit.

8-302. +5 Volt Circuit. A full-wave bridge rectifier (A10CR2) supplies the input voltage to the +5 V voltage regulator (U1). The 6.2 V zener diode (CR2, chassis mounted) that is connected to the regulator's output provides overvoltage protection for the +5 V line going to the Inguard circuits. The chassis serves as a heat sink for CR2.

8-303. −18 Volt Circuit. The −18 V circuit uses a voltage doubler to increase the voltage level appearing at the negative terminal of full-wave rectifier CR1 (−17.5 V to −30 V range) to a −21 V to −33 V range. The ac voltage appearing at the negative terminal of capacitor C16 (330 μF) is rectified by diode CR10 (half-wave rectifier). The negative voltage at CR1 is applied through diodes CR9 and CR10 and added to that level rectified by CR10. The 22 V zener diode (CR12) that is connected to the output of the −18 V voltage regulator provides overvoltage protection for the −18 V line going to the Inguard circuits.

8-304. +33 Volt Circuit. The +33 V Unregulated circuit (+33 to +46 V range) uses a voltage doubler that is similar to that used by the +18 V circuit. The +5 V output of voltage regulator U1 is added to the output of the C7 and CR6 half-wave rectifier to provide the desired voltage range. The 39 V zener diode (CR5) that is connected to the output of this voltage circuit provides overvoltage protection for the Inguard circuits connected to this line. Note that the anode of CR5 is referenced to +5 V rather than ground.

8-305. 12 Volt Reference Supply. Some of the more critical Inguard circuits use ±12 V for their operation. These voltages are supplied by the 12 Volt Reference located on the A20 board. Refer to Paragraph 8-101 for the circuit description of the 12 Volt Reference.

8-306. Inguard Grounding Structure. Four separate grounds are used in the Inguard circuits so that the operation of the more critical, lower current circuits (e.g. ground 1 used) will not be affected by the larger ground currents generated by other less critical circuits (e.g. logic circuits use ground 4). Figure 8-58, Inguard Grounding Structure, illustrates the current range of each ground and which circuit uses which ground.

8-307. Outguard Power Supply. Since all of the Outguard circuits need only a single +5 V supply, the Outguard Power Supply requirements are a single voltage (+5 V) with a large current capability. Four discrete rectifier diodes (A3CR5-CR8) are used for the

full-wave rectifier input to the +5 V IC voltage regulator (U1). The 6.2 V zener diode (CR1) connected to the output of voltage regulator, U1, provides overvoltage protection for the +5 V line going to the Outguard circuits. Regulator U1 and zener CR1 are chassis mounted so that the chassis can serve as the heat sink for these components. The in-tolerance voltage range for the +5 V supply is 4.75 V to 5.25 V with a design current maximum of 1.8 amps.

8-308. Power Supply Ready Line. The transistor array circuit (A3U18) in the Outguard Power Supply is used to generate a Power Supply Ready signal (0 V to +5 V transition). This signal is used by the Main Controller μP and the HP-IB Interface Adapter. The output of the full-wave rectifier (+7.5 V to +15 V) is applied to resistors A3R14 and R15 and the output of the voltage regulator (U1) is applied to pin 11 of U18. The U18 circuit delays the 0 V to +5 V output transition at pin 9 of U18 (Power Supply Ready line) so that the Main Controller, the clock generator, and HP-IB Adapter can be up and running before an initializing reset occurs.

8-309. TROUBLESHOOTING.

8-310. Introduction.

8-311. The following portion of the manual has information to aid in troubleshooting and repair of the 3456A. This information is given in Service Groups with Preliminary Troubleshooting Procedures using the 3456A's Self-Test Feature. It is recommended to use the feature to determine if the instrument fails.

8-312. The Service Groups are symptoms oriented and should be selected according to instrument failure. A listing of the failures and the corresponding service group is given in Table 8-12. Since most failures, except for most Outguard Failures, are also detected by the 3456A's Self-Test, use the test to determine the instrument failure. The Test information can be found starting with Paragraph 8-327. Once the failure has been determined, use the recommended Service Group for further troubleshooting. A summary of the groups is in Paragraph 8-317.

8-313. Board Removal and Installation.

8-314. Most Printed Circuit Boards in the 3456A can be easily removed, since the boards are held in by strategically located black nylon fasteners. The number of fasteners on the boards vary, dependent on the board size. The following lists the board (assembly) and number of fasteners.

Board	Number of Fasteners
A3	2
A4	2
A20	7
A30	2

8-315. Use the following procedure to remove a board that is held in by fasteners. The AC Converter (A40 board) is one of the boards which are not held in by fasteners. To remove this board, locate the metal shield across the board. Holding the shield in place are four screws. Remove the screws and then remove the shield. The AC Converter can then be removed from the instrument. To remove the boards with fasteners, do the following:

a. Turn the 3456A Off.

b. Disconnect from the board, any wires or connectors external to the board (not part of the board).

c. To unlatch the fasteners, grip the head (top) of the fasteners and pull away from the board. The fasteners are unlatched when a "pop" is heard.

d. To remove the board, locate two fasteners which are opposite each other and pull on them, away from the instrument, until the board is separated from the instrument.

8-316. To install the board, do the removal procedure in reverse.

Table 8-12. 3456A Service Group Listing.

Failure	Service Group	Instrument Section
Turn-On Failure	A	Outguard
Inoperative Display		Outguard
Inoperative Annunciator		Outguard
Inoperative Keyboard		Outguard
Combined Display, Annunciator, and Keyboard Failure		Outguard
HP-IB Failure		Outguard
Isolation Logic		Outguard
Miscellaneous		Outguard
Inguard Logic	B	Inguard
A/D (Analog, Digital)		Inguard
Isolation Logic		Inguard
DCV	C	Inguard
Overload		Inguard
DCV Accuracy		Inguard
DCV Noise		Inguard
Ratio		Inguard
Analog Filter		Inguard
Ohms	D	Inguard
Overload		Inguard
Ohms Accuracy		Inguard
Ohms Noise		Inguard
O.C. Ohms		Inguard
A C V	E	Inguard
Overload		Inguard
ACV Accuracy		Inguard
ACV Noise		Inguard
Miscellaneous	F	Inguard
Power Supplies		Outguard/Inguard
Internal Adjustments		Inguard

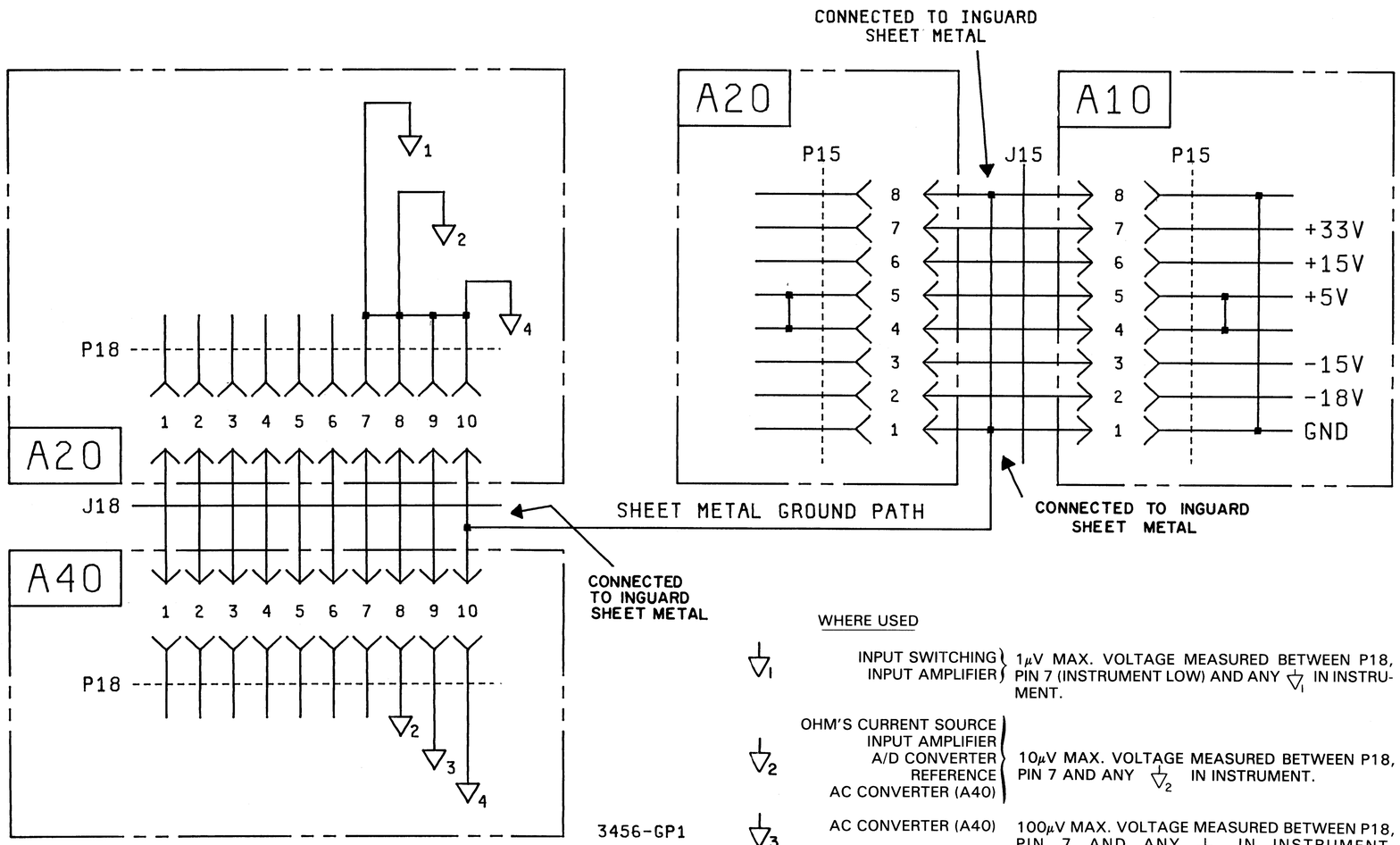

WHERE USED

∇_1	INPUT SWITCHING INPUT AMPLIFIER	1μV MAX. VOLTAGE MEASURED BETWEEN P18, PIN 7 (INSTRUMENT LOW) AND ANY ∇_1 IN INSTRUMENT.
∇_2	OHM'S CURRENT SOURCE INPUT AMPLIFIER A/D CONVERTER REFERENCE AC CONVERTER (A40)	10μV MAX. VOLTAGE MEASURED BETWEEN P18, PIN 7 AND ANY ∇_2 IN INSTRUMENT.
∇_3	AC CONVERTER (A40)	100μV MAX. VOLTAGE MEASURED BETWEEN P18, PIN 7 AND ANY ∇_3 IN INSTRUMENT.
∇_4	INGUARD LOGIC (A30) ALL OTHER INGUARD GROUNDS (A20)(A40)	2 mV MAX. VOLTAGE MEASURED BETWEEN P18, PIN 7 AND ANY ∇_4 IN INSTRUMENT

IN GENERAL, ∇_1, ∇_2, AND ∇_3 ARE USED IN ANALOG CIRCUITS AND ∇_4 IS USED IN LOGIC GATE CIRCUITS, POWER SUPPLY AND IN ALL OTHER CIRCUITS NOT UTILIZING ∇_1, ∇_2, AND ∇_3

Figure 8-58. Inguard Grounding Structure.

CAUTION

Make sure the 3456A is turned Off and power is removed from the instrument before removing or installing a printed circuit board, or damage to the instrument may result.

CAUTION

Many printed circuit boards in the 3456A have MOS devices. Care must be taken when handling the boards.

8-317. Service Group Summary.

8-318. Service Group A (Outguard Logic Failures). This group deals mostly with Outguard Logic Failures. A description of the failure is as follows:

a. *Turn-On Failure.* A Turn-On Failure is present when the 3456A's Display, Keyboard, and HP-IB is dead or inoperative. If any of these symptoms are not present or only dashes (– – – – – –) are displayed, the instrument does not have a turn-on failure.

b. *Inoperative Display.* An Inoperative Display applies to all the display digits except, the most significant digit, the first decimal point, and both polarity indicators.

c. *Inoperative Annunciators.* An Inoperative Annunciator is when any or all annunciators are not working correctly, including the display's most significant digit, first decimal point, and both polarity indicators.

d. *Inoperative Keyboard.* An Inoperative Keyboard is when any or all instrument operation cannot be selected from the keyboard.

e. *HP-IB Failure.* An HP-IB failure is when only the 3456A's Remote Operation fails. If any other failures are noted, troubleshoot them first.

f. *Isolation Logic Failure.* An Isolation Logic failure is normally idnicated when the 3456A's displays only dashes (– – – – – –) and Self Test #3 fails. Since both an Inguard Logic and Outguard Isolation Logic failure can show dashes and can fail test #3, go to Service Group A, Paragraph 8-A-34 or Service Group B, Paragraph 8-B-6 to determine the faulty area.

g. *Miscellaneous Failure (Outguard only).* Some miscellaneous failures can be an inoperative Voltmeter Complete, External Trigger, and Math.

8-319. Service Group B (Inguard Logic Failures). This Service Group has troubleshooting information on the 3456A's Inguard Logic and A/D Converter. The Inguard Isolation Logic troubleshooting is also in this service group. This group is also selected for certain test failures (see Paragraph 8-332).

8-320. Service Group C (DCV Failures). This group has troubleshooting on DCV failures, Ratio, and Analog Filter failures. This group is also for certain test failures (see Paragraph 8-332).

8-321. Service Group D (Ohms Failures). Use this group for any Ohms failures, including O.C. Ohms. The group is also selected for certain test failures (see Paragraph 8-332).

8-322. Service Group E (ACV Failures). Use this group for any ACV failures. The group is also selected for certain test failures (see Paragraph 8-332).

8-323. Service Group F (Miscellaneous). This group has troubleshooting for the power supplies and Internal Adjustment Procedures. The procedures should only be used after repair of the 3456A.

8-324. Component Reference Designator.

8-325. The component Reference Designator tells where the component is located. For example, component A20R105 shows that it is located on the A20 board (assembly). This is shown by the "A20" in the designator. The other areas can be determined the same way (A40C5, A40 board, etc.).

8-326. The circuitry in which a component on the A20 board is located, can also be determined from the reference designator. For example, A20R105 is located in the Input Switching Circuitry. This is determined by referring to the first number of the type of component designation (R for resistor, C for capacitor, etc.). The first number in this example is "1", which is the Input Switching Circuitry. A listing of the different circuitry and schematic location is given in Table 8-13.

Table 8-13. Component Numbering.

Component Number Prefix	Circuitry Used	Schematic Number
1	Input Switching	1
2	Ohms Current Source	2
3	Input Amplifier	3
4	A/D Converter	4
5	Reference	5A,5B
6	Front Panel Calibr.	1,2,5A,5B
7	Range and Function Control Logic	1,2,3,6

8-327. Selecting the Self-Test.

8-328. When the test is enabled, by pressing the TEST button, the instrument starts a routine in which 12 individual tests are performed. The test routine is:

a. The LEDs are lit and the display shows "+1.8.8.8.8.8.+8.".

b. All front panel display and LEDs are blank.

c. Test #1 through #12 are sequentially executed.

d. The loop is repeated until the TEST button is pressed again.

NOTE

Make sure no connection is made at the 3456A's Input Terminals and the GUARD switch is in the "IN" position during the Test mode.

8-329. If no failures are detected during the test, the 3456A alternately lights and blanks the display. If a test fails, a negative integer which corresponds to the failed test is displayed. When this happens, the 3456A does not do any of the other tests, it will remain in the failed test mode until the test passes or the instrument is taken out of the Test mode. The tests are normally done in order from #1 to #12.

8-330. The failed test and any other test can be individually selected from the front panel, to simplify troubleshooting. Select a test this way:

a. Press the TEST button (if not in the Test mode).

b. Enter the desired test number (1-12) from the keyboard.

c. Press the STORE button.

d. Press the "5" (COUNT register) key on the Numbered Keyboard.

8-331. Using this method the 3456A remains in the selected test mode until the 3456A is taken out of the Test mode (by pressing the TEST or RESET button).

8-332. When a test is selected, certain information is displayed. If Test #1, 2, or 3 is selected and the test passes, a +1, +2, or +3 is displayed, respectively. If the test(s) fail, a −1, −2, or −3 is displayed, respectively. For tests 4 through 12, the A/D Converter's output is displayed. Since the selected test is continually exercised and the converter output is displayed, the faulty circuitry can be checked in the inoperative state.

8-333. Test number 1, 2, and 3 are digital tests and numbers 4 through 12 are analog tests. The tests parameters are listed in Table 8-14 and are explained as follows. Remember, the A/D output is only displayed if an individual test is selected.

Table 8-14. 3456A Self-Test Limits.

Test #	PLC	Auto Zero	Filter	Delay	Lower Limit	Upper Limit
1	–	–	–	–	–	–
2	–	–	–	–	–	–
3	–	–	–	–	–	–
4	1	On	Off	.08	-.00011	+.00011
5	1	On	Off	.08	-.00081	+.00081
6	1	On	Off	.08	-.00798	+.00798
7	10	On	Off	.08	-12.00394	-11.99606
8	.1	On	Off	.08	.0000	+.015000
9	.01	On	Off	.08	.000	+.1500
10	10	Off	On	.8	-.10202	-.09798
11	1	On	Off	.08	-10.20000	-9.80000
12	1	Off	Off	.08	+9.60000	+10.40000

a. Test #1. This test checks the Program Memory RAM. It is accomplished by writing "0" into the RAM and then reading "0" from the RAM. The same is done with writing and reading "1". The sequence is repeated for each byte in the RAM.

b. Test #2. This test verifies that the Outguard's Microprocessor is functional. It is done by doing the 3456A's Math calculations and checking the results.

c. Test #3. This test verifies the Isolation Logic. It is done by sending a hexadecimal "8F" from the outguard to the Inguard Controller. The controller then sends back to the Outguard either a hexadecimal "8F" or "9F", depending on the Front/Rear switch position.

d. Test #4. In this test the Input Amplifier is set-up for the X1 gain configuration with its input shorted to ground (Autozero On). The output of the A/D Convertor (Input Amplifier offset) is displayed on the front panel, checking the circuitry between and including the Input Amplifier and A/D Converter.

e. Test #5. This is the same as Test #4 with the Input Amplifier set to the X10 gain configuration.

f. Test #6. This is the same test as Test #4 and #5 with the Input Amplifier set to the X100 gain configuration.

g. Test #7. The −12 V reference voltage is applied to the Input Amplifier with the resultant output of the A/D Converter displayed. The Input Amplifier is in the X1 gain configuration.

h. Test #8. The AC Converter's offset is checked with its input relay open.

i. Test #9. The AC Converter's offset is checked with its input relay closed.

j. Test #10. The 500 nA current source is applied to the top of the 10 M ohm resistor of the 100:1 Divider. The output voltage of the divider (voltage across the 100 K ohm resistor) is connected to the Input Amplifier with the amplifier in the X2 gain configuration.

k. Test #11. The 500 nA current source is applied to the top of the 10 M ohm resistor of the 100:1 Divider. The voltage across the 10 M ohm resistor is applied to the Input Amplifier with the amplifier in the X2 gain configuration.

l. Test #12. The 5 microAmp current source is applied to the AC Converter. The converter's output is connected to the input Amplifier with the amplifier in the X2 gain configuration.

8-334. Self-Test Troubleshooting.

8-335. The following paragraphs have troubleshoot information for the 3456A's Self-Test mode.

8-336. Test #1. If this test fails, try replacing the RAMs in the Outguard Logic (A4U10, U11 shown on Schematic 9). If that does not help, go to Service Group A for troubleshooting.

8-337. Test #2. If this test fails, try replacing the Outguard Microprocessor (A4U15 shown on Schematic 9). If that does not help, go to Service Group A for troubleshooting.

8-338. Test #3. This test fails if either the Inguard or Outguard Isolation Logic is inoperative. Since either Isolation Logic can cause the test to fail, the faulty circuitry needs to be determined. A procedure is in Service Group A, Paragraph 8-A-34 and Service Group B, Paragraph 8-B-6.

8-339. Test #4. If this test fails, the instrument malfunction can be in the Inguard Logic, A/D Circuitry, and DCV Analog Circuitry (Input Switching and Input Amplifier). This test quite often fails when an Overload condition (OL) is dislayed (in all function and ranges). A procedure to determine the faulty area is in Service Group B, Paragraph 8-B-8 or Service Group C, Paragraph 8-C-10.

8-340. Test #5 and #6. If any of these tests fail, the malfunction is most likely in the Input Amplifier's feedback circuitry. This is because these tests are similar to Test #4 with the amplifier in a different gain configuration (X10 for Test #5 and X100 for Test #6). Try replacing A20Q307 if Test #5 fails or Q309, if Test #6 fails (see Schematic 3). If the test(s) still fail, go to Service Group C for troubleshooting.

8-341. Test #7. If this test fails, the failure can be in the A/D Converter or Inguard Logic. Go to Service Group B for troubleshooting.

8-342. Test #8 or #9. If any of these tests fail, the failure is most likely in the AC Converter. Before troubleshooting the converter, perform the ACV Adjustment first (in Section V of this manual). If the test still fails, go to Service Group E for troubleshooting.

8-343. Test #10 or #11. If these tests fail, the failure can be in the Ohms Converter, Input Amplifier, or Input Switching. To determine the circuitry, make sure the 3456A is good on the 100 V and 1000 V Ranges in the DCV Function. If the ranges are faulty, go to Service Group C for troubleshooting. If the ranges are good, the Ohms Function most likely at fault (the 10 M ohm Range and higher are inoperative). Go to Service Group D for troubleshooting.

8-344. Test #12. If this test fails, the failure can be in the Ohms Converter or AC Converter. To determine the circuitry, set the 3456A to the 1 M ohm Range in the Ohms Function. If the function is inoperative, go to Service Group D for troubleshooting. If the function is good, the AC Converter is at fault. Go to Service Group E for troubleshooting.

Mnemonic Definitions.

Mnemonic	Definition	Origin	Destination
ALE	Address Latch Enable	A30-U13(1)	A30-U1a(1), U6b(12), U7b(11), U14a(1), U14c(10)
	Address Latch Enable, Synchronizer	A30-U6b(9)	A20-Q401
AZ	Auto Zero (A/D Auto Zero Enable)	A20-U401(15)	A20-Q408
F/R	Front/Rear Switch	S2 (chassis mounted)	A30-U13(35)
GB1	Gate Bias #1	A20-U105(6)	A20-TP104, Q101/Q109,Q102, Q103, Q110/Q113, Q114/Q116, Q115.
GB2	Gate Bias #2	A20-U305(6)	A20-TP304, Q306, Q307, Q309, Q105
HAC	High True, AC (AC Enable)	A20-U702(21)	A20-U107d(12), U101c(9)
HACD	High True, AC Plus DC (AC + DC input enable)	A20-U702(13)	A40-U10b(5,6), U10d(12)
HACV	High True, AC Volts (AC input enable)	A20-U702(20)	A40-U10a(2,3)
HAF	High True, Analog Filter (filter enable)	A30-U13(36)	A40-U11(8,11)
HAL	High True, Input Amplifier Coded Gain to Least Significant Bit	A20-U702(22)	A20-U701(14)
HAM	High True, Input Amplifier Coded Gain to Most Significant Bit	A20-U702(23)	A20-U701(13)
HA1	High True, Input Amplifier Gain of 1 (Decoded from HAL and HAM)	A20-U701(9)	A20-U304b(7)
HA2	High True, Input Amplifier Gain of 2 (Decoded from HAL and HAM)	A20-U701(10)	A20-U202a(5), U202b(6), Q304, U304d(11); A21-R603
HA10	High True, Input Amplifier Gain of 10 (Decoded from HAL and HAM)	A20-U701(11)	A20-Q303, U304c(9)
HA100	High True, Input Amplifier Gain of 100 (Decoded from HAL and HAM)	A20-U701(12)	A20-Q302, U304a(5)
HCP	High True, Comparator (Integrator Voltage Polarity Indicator)	A20-U409b(1)	A20-TP405; A30-J33(1), U3a(1), U4b(5), U13(1)
HDCH	High True, DC, High Ranges (Input Relay Enable—100V and 1000V Ranges)	A20-U702(18)	A20-K102 (via Q703)
HDCL	High True, DC, Low Ranges (Input Relay Enable—.1V, 1V, and 10V Ranges)	A20-U702(17)	A20-K103 (via Q701)
HDH	High True, DC, High Ranges (DC Enable—100V and 1000V Ranges)	A20-U702(3)	A20-U107(7)
HDL	High True, DC, Low Ranges (DC Enable—.1V, 1V, and 10V Ranges)	A20-U702(5)	A20-U102d(11), U107b(5)
HGND	High True, Ground (Gnd Enable-Autozero)	A20-U103a(1)	A20-U104c(9)
HL	High True, Ohms & AC, Least Significant Coded Range Bit	A20-U702(15)	A20-U701(2)
HM	High True, Ohms & AC, Most Significant Coded Range Bit	A20-U702(16)	A20-U701(3); A40-U11(4,7)
HOHM	High True, Ohms (Relay Enable)	A20-U702(19)	A20-U301a(3), K101 (via Q702)
HRU	High True, Run-Up (Run-Up Enable)	A20-U408(13)	A20-U401(3)
HSA	High True, Slope Bit A	A30-U9(11)	A20-U408(8); A30-U10a(13)

Mnemonic Definitions (Cont'd).

Mnemonic	Definition	Origin	Destination
HSB	High True, Slope Bit B	A30-U9(5)	A20-U408(4)
HSC	High True, Slope Bit C	A30-U9(3)	A20-U408(6)
H1	High True, Range Bit 1, Ohms (10 MΩ) & AC (1.0 V) (Decoded from HL & HM)	A20-U701(4)	A20-U201a(5), U202c(8); A21-R605; A40-U8(4,7,11)
H1A	High True, Range Bit 1-Buffered, AC (1.0V Range)	A40-U8(13)	A40-Q20
H2	High True, Range Bit 2, Ohms (1 MΩ) & AC (10.0 V) (Decoded from HL and HM)	A20-U701(5)	A20-U201b(7); A21-R604; A40-U9(4,7)
H3	High True, Range Bit 3, Ohms (100 kΩ and 10 kΩ) & AC (100.0 V) (Decoded from HL and HM)	A20-U701(6)	A20-U201c(9); A40-U9(11)
H4	High True, Range Bit 4, Ohms (100 Ω and 1 kΩ) & AC (1 kV) (Decoded from HL and HM)	A20-U701(7)	A20-U201d(11); A21-R602; A40-U9(9)
H4WH	High True, 4 Wire Ohms High	A20-U702(2)	A20-U102c(9)
LACF	Low True, AC Filter	A20-U107d(11)	A20-U102b(6)
LDE	Low True, Load Enable	A20-U702(14)	A20-U701(1)
LDHF	Low True, DC High Ranges Filter	A20-U701a(3)	A20-U101a(4)
LDLF	Low True, DC Low Ranges Filter	A20-U107b(6)	A20-U102a(4)
LGND	Low True, Ground	A30-U13(32)	A20-U103a(3), U103d(11), U107c(9)
LGS	Low True, Ground Select	A20-U702(1)	A20-U103a(2), U103b(5)
LMES	Low True, Measure	A30-U13(33)	A20-U107c(10), U108a(3), U108b(6)
LOVL	Low True, Overload	A20-U409a(2)	A30-J35(1)
LPC	Low True, Precharge	A20-U107c(8)	A20-U104a(4)
LRU	Low True, Run-Up	A30-U10c(8)	A20-U408(10)
LTS7	Low True, Self Test #7	A20-U702(4)	A20-U101d(10)
L4WL	Low True, 4 Wire Ohms Low	A20-U103d(13)	A20-U104d(11)
PROG	Program Bit	A30-U13(25)	A20-U702(7)
SA TRIG	Signature Analysis Trigger	A30-U13(37)	A20-TP404

GENERAL SCHEMATIC NOTES

1. RESISTANCE IN OHMS, CAPACITANCE IN MICROFARADS, INDUCTANCE IN MICROHENRIES UNLESS OTHERWISE NOTED
2. ASTERISK DENOTES A FACTORY-SELECTED VALUE. VALUE SHOWN ON SCHEMATIC IS TYPICAL.
3. ENCLOSES FRONT PANEL MARKING.
4. ENCLOSES REAR PANEL MARKING.
5. CIRCUIT ASSEMBLY BORDERLINE.
6. OTHER ASSEMBLY BORDERLINE. ALSO USED TO INDICATE MECHANICAL INTERCONNECTIONS (GANGING).
7. HEAVY SOLID LINE INDICATES PATH OF MAIN SIGNAL.
8. 918 DENOTES WIRE COLOR CODE. CODE USED IS SAME AS THE RESISTOR COLOR CODE. FIRST NUMBER INDENTIFIES THE BASE COLOR, SECOND NUMBER IDENTIFIES THE WIDER STRIPE, THIRD NUMBER IDENTIFIES THE NARROWER STRIPE.

   E.G. 918 DENOTES WHITE BASE, BROWN WIDE STRIPE, GRAY NARROW STRIPE.
9. DENOTES GROUND ON **OUTGUARD** PC ASSEMBLIES. CONNECTED TO INSTRUMENT FRAME GROUND.
10. ∇_1 ∇_2 ∇_3 ∇_4 **INGUARD** GROUNDS ARE REFERENCED TO INGUARD POWER SUPPLY GROUND AND ISOLATED FROM INSTRUMENT FRAME GROUND. SEE FIGURE 8-58. INGUARD GROUNDING STRUCTURE.
11. DENOTES SCREWDRIVER ADJUST.

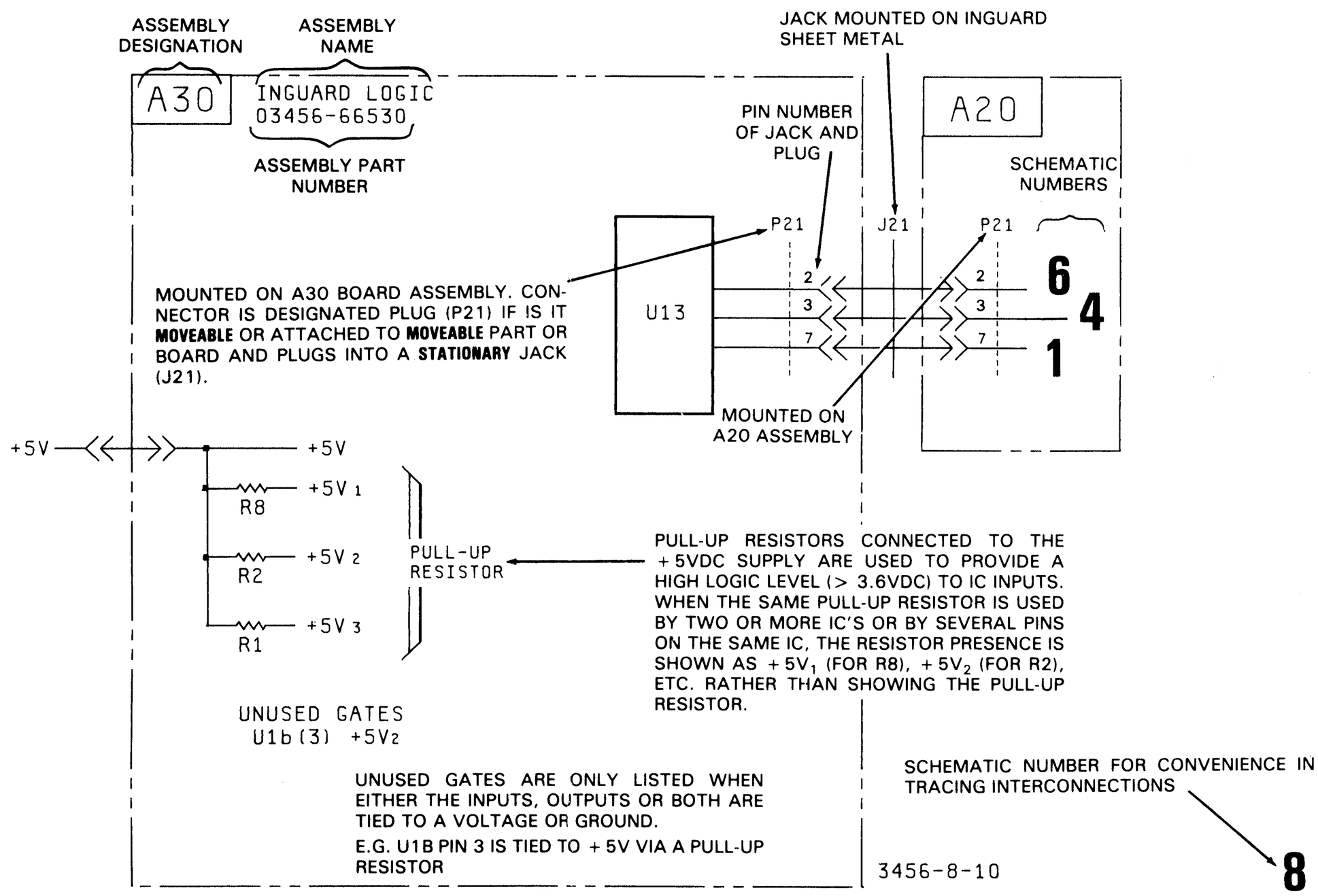

Figure 8-XX. Example Schematic.
8-XX/8-XX

Figure 8-59. Mnemonic Definitions and General Schematic Notes.

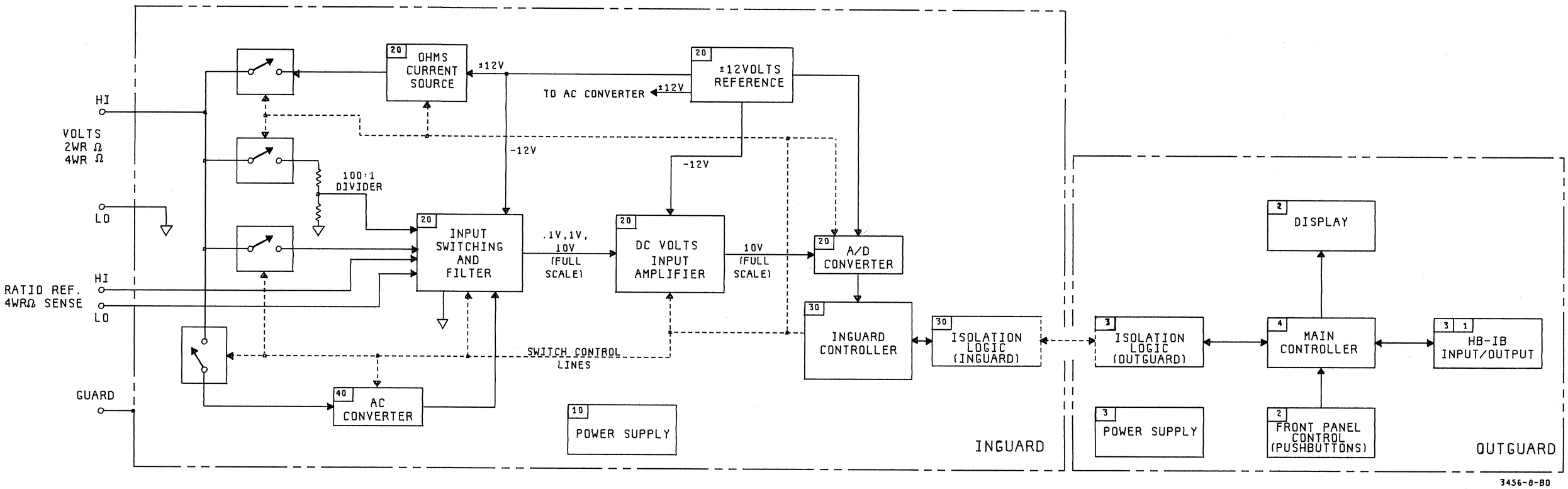

Figure 8-60. Detailed Block Diagram.

A20 Board - Input Switching - Component Locator Table.

Component	Col.	Component	Col.	Component	Col.	Component	Col.
C101	D-E	Q101	E	R111	E	R143	G
C102	D-E	Q102	E	R112	E-F	R144	G
C103	E	Q103	E	R113	F	R145	G
C104	E	Q104	E	R114	E	R146	G
C105	F	Q105	D-E	R115	E	R147	G
C106	F	Q106	D	R116	E-F	R148	G
C107	F-G	Q107	D-E	R117	F	R149	E
C108	G	Q108	E	R118	E	R150	E
C109	G	Q109	E	R119	E	R617	A
C110	G	Q110	E	R120	E	R618	A
C111	G	Q111	E	R121	E	TP101	C
		Q112	E	R122	E	TP102	D
CR101	E	Q113	E	R123	E-F	TP104	F-G
CR102	E	Q114	E	R124	E-F	TP105	G
		Q115	E	R125	F	TP106	G
J19	D	Q116	E	R126	F		
J20	D	Q117	E	R127	F	U101	F
J22	D-E	Q118	E	R128	F	U102	F
J23	E	Q119	E	R129	F	U103	F
		Q120	E	R130	F	U104	F
JMPR101	G	Q121	G	R131	G	U105	F-G
JMPR102	G			R132	G	U106	G
JMPR103	C	R101	D	R133	G	U107	G
JMPR602	A	R102	D	R134	G	U108	G
K101	C-D	R103	D	R135	G		
K102	D	R104	E	R136	G	U200	B-C
K103	D	R105	D-E	R137	G		
		R106	E	R138	G		
P15	G	R107	E	R139	G		
P18	C	R108	E	R140	G		
P21	D	R109	D-E	R141	G		
P30	F-G	R110	E	R142	G		

Δ_A FOR SERIAL NUMBERS 2015A00530 AND ABOVE, JMPR 103 HAS BEEN ADDED.

A20 Input Switching IC Type/Voltage Table

IC	Type	+18 V	+15 V	+5 V	GND	-15 V	-18 V
U101, U102	LM339N	---	---	3	---	---	12
U103	SN74LS02N	---	---	14	7	---	---
U104	LM339N	---	---	3	---	---	12
U105	LM201AL	7	---	---	---	---	4
U106	LM301AN	---	7	---	---	4	---
U107	SN74LS00N	---	---	14	7	---	---
U108	LM393N	---	---	8	---	---	4

NOTE: + 18 V Source is Q301 (Input Amplifier Section).

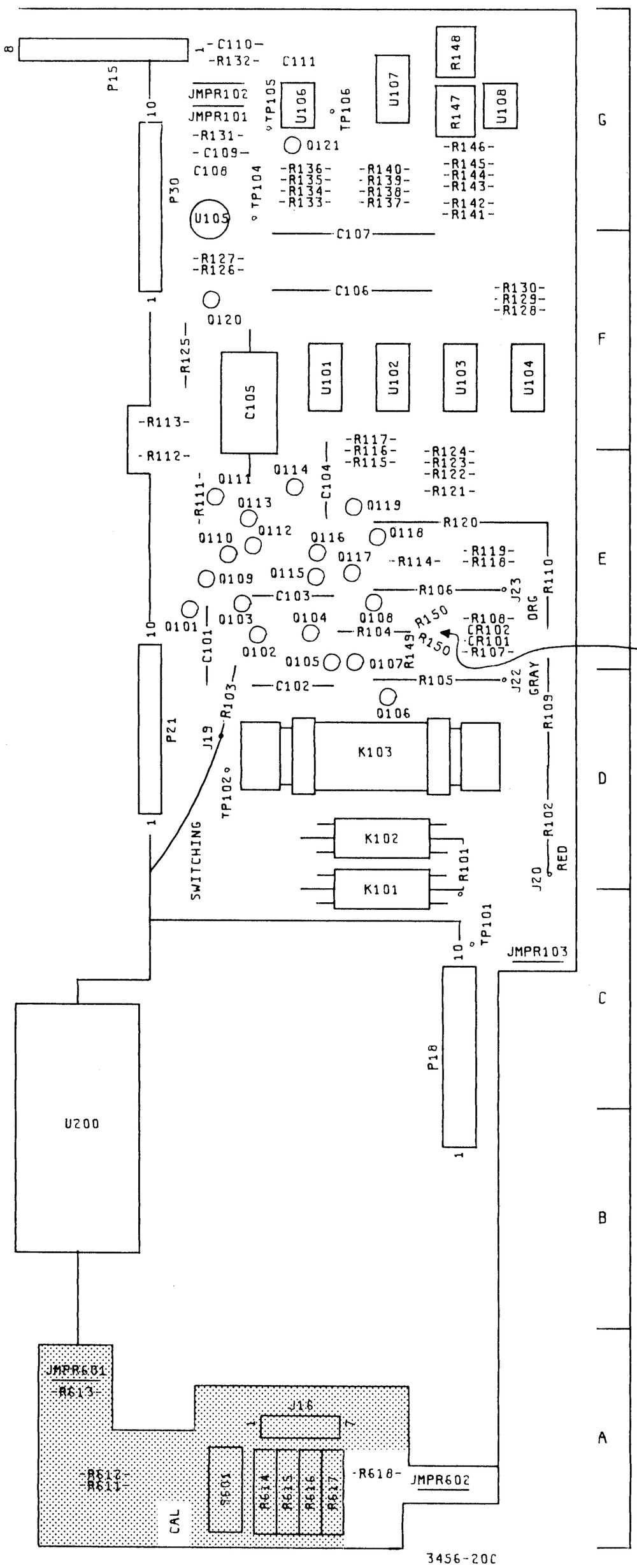

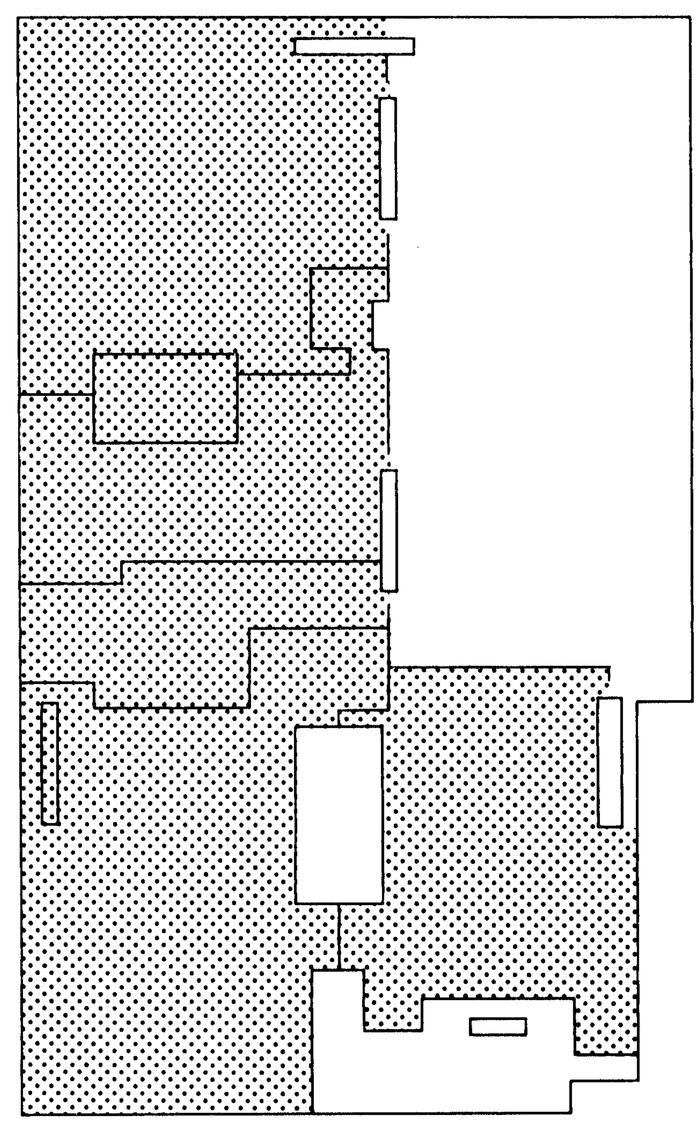

A20
03456-66520
(INPUT SWITCHING)

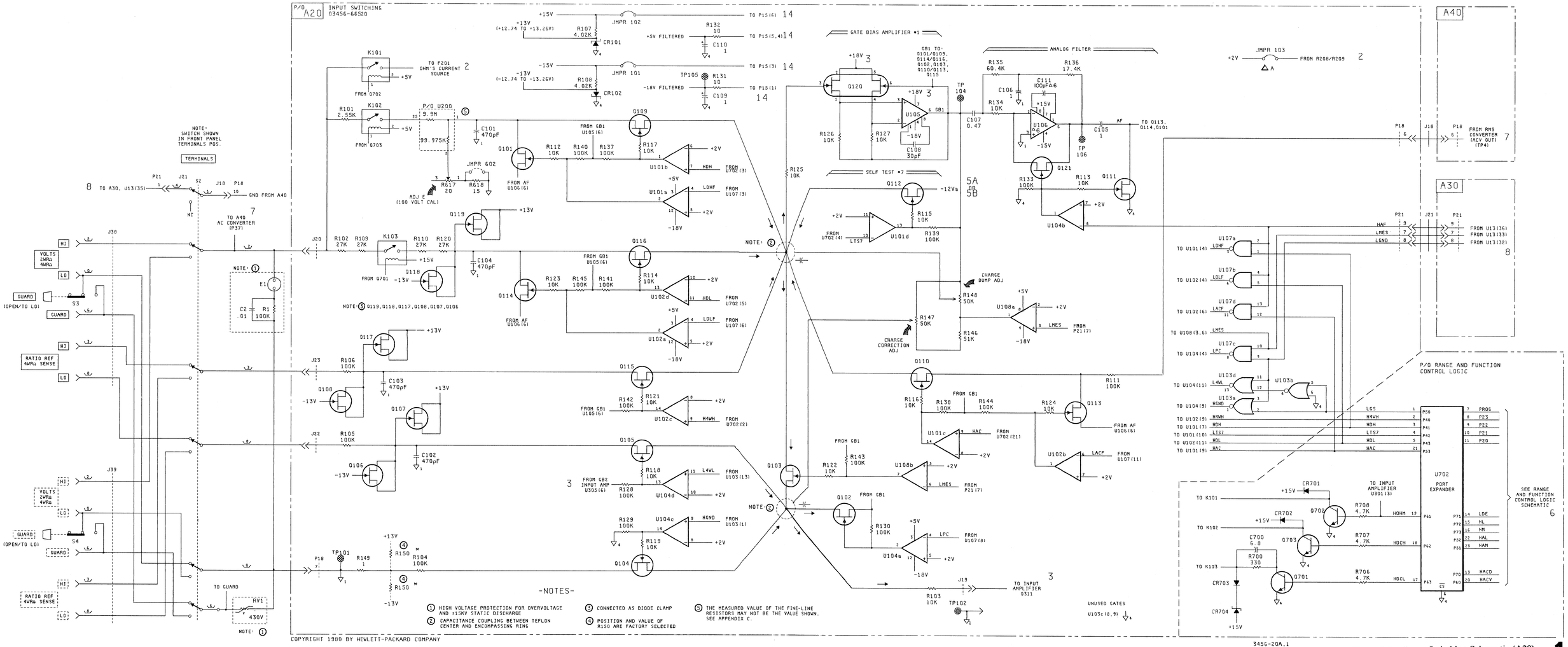

Figure 8-61. Input Switching Schematic (A20).

A20 Board - Ohm's Current Source - Component Locator Table

Component	Col.	Component	Col.	Component	Col.	Component	Col.
C201	C	P16	A	R208	C	R608	A-B
C202	D	P18	D-E	R209	C	R609	A-B
C203	D			R210	C	R610	A-B
C204	D	Q201	C	R211	C		
		Q202	C	R212	C	TP201	D
CR201	E	Q203	D	R213	C	TP202	C
CR202	E	Q204	D	R214	C-D	TP203	D
		Q205	D	R215	C		
E201	E	Q206	D	R216	C-D	U201	B-C
		Q207	D	R217	C-D	U202	C
F201	E	Q208	E	R218	D	U203	C
		Q209	E	R219	D-E	U204	D
J16	B-C	Q210	E	R220	C-D	U205	D
		Q211	E	R221	C-D		
JMPR201	C			R222	E		
JMPR202	C	R201	C	R601	A		
JMPR203	C	R202	C	R602	A		
JMPR204	C	R203	C	R603	A		
JMPR205	D	R204	C	R604	A		
JMPR206	D	R205	C	R605	A		
JMPR207	D	R206	C	R606	A-B		
JMPR208	D	R207	C	R607	A-B		

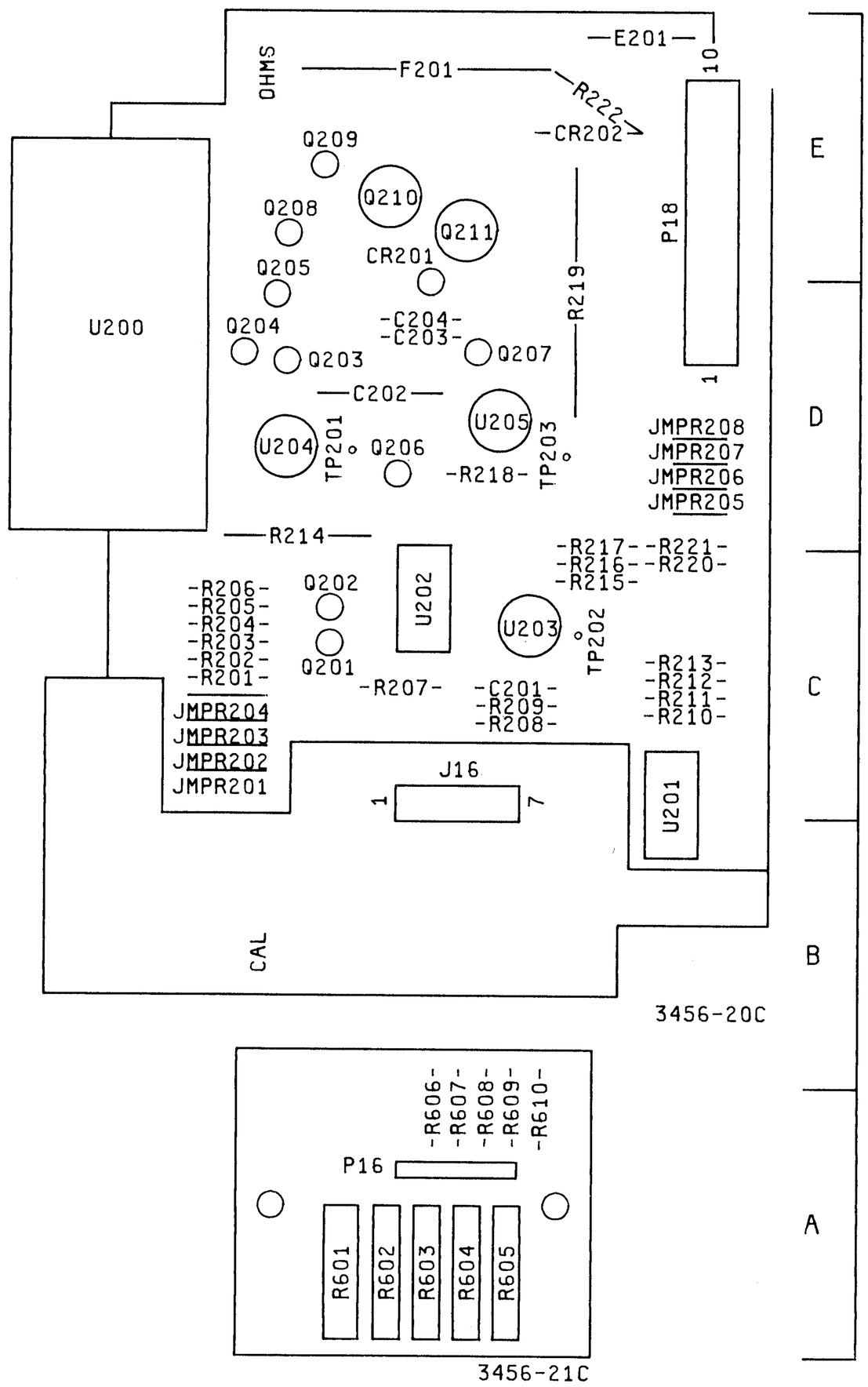

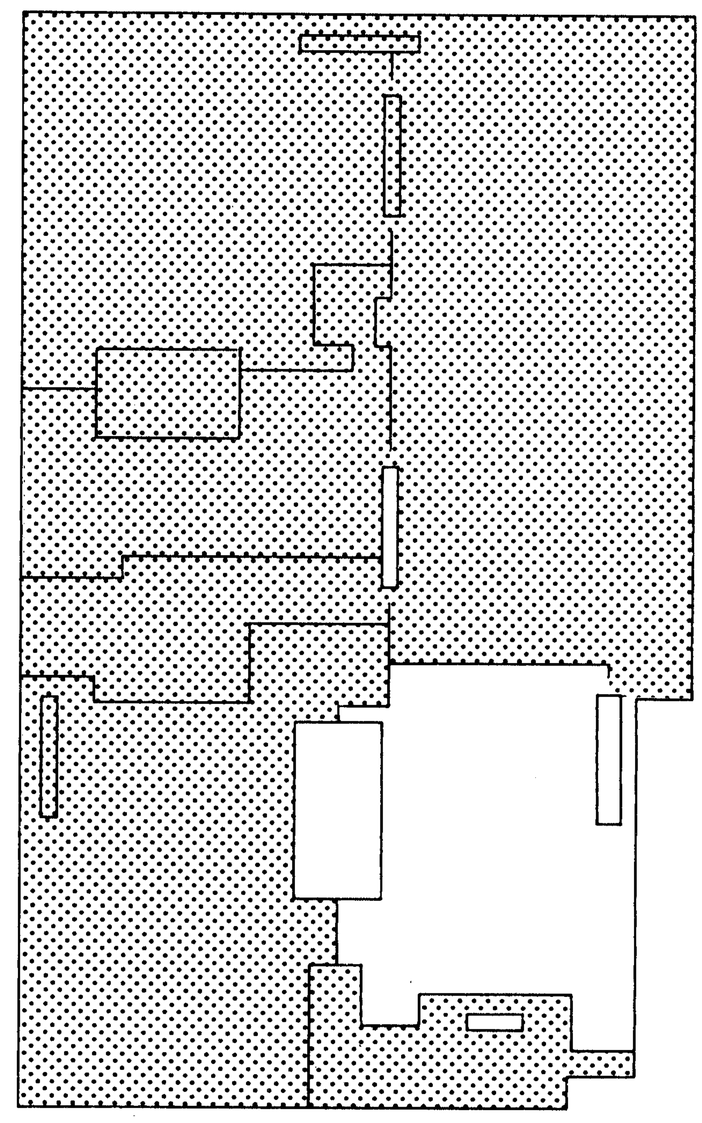

A20
03456-66520
(OHM'S CURRENT SOURCE)

A20 Ohms Current Source IC Type/Voltage Table

IC	Type	+15 V	+5 V	GND	-15 V	-18 V
U200	1QD4-0044	- - -	- - -	- - -	- - -	- - -
U201, U202	LM339N	- - -	3	- - -	- - -	12
U203	LM308H	- - -	- - -	7	4	- - -
U204	LM308AH	- - -	- - -	7	- - -	4
U205	LM208AH	7	- - -	- - -	4	- - -

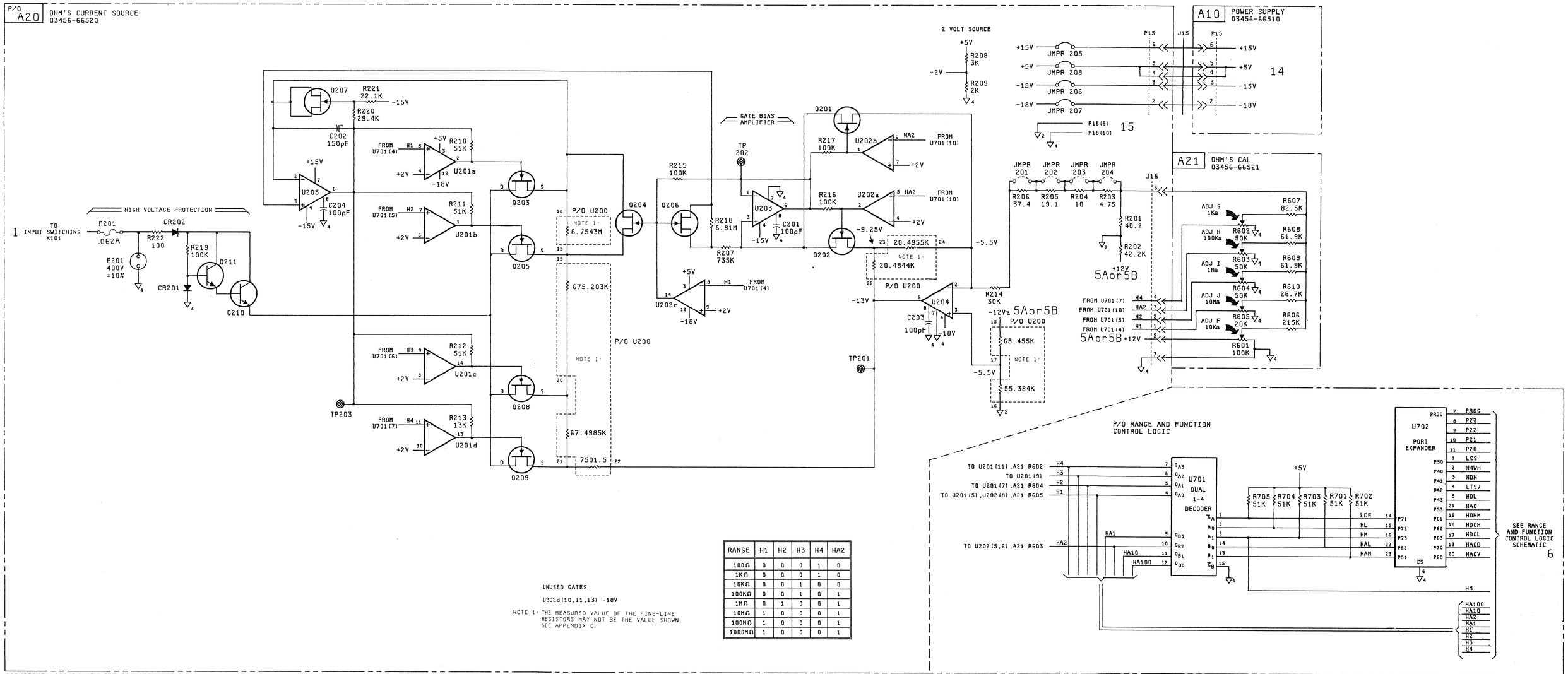

RANGE	H1	H2	H3	H4	HA2
100Ω	0	0	0	1	0
1KΩ	0	0	0	1	0
10KΩ	0	0	1	0	0
100KΩ	0	0	1	0	1
1MΩ	0	1	0	0	1
10MΩ	1	0	0	0	1
100MΩ	1	0	0	0	1
1000MΩ	1	0	0	0	1

Figure 8-62. Ohm's Current Source Schematic (A20).

A20 Board - Input Amplifier - Component Locator Table.

Component	Col.	Component	Col.	Component	Col.	Component	Col.
C301	A	Q301	B	R313	B	R611	A
C302	B	Q302	B-C	R314	B	R612	A
C303	C	Q303	C	R315	B	R613	A
C304	C	Q304	C	R316	B	R615	A
C305	D	Q305	B-C	R317	B	R616	A
		Q306	B	R318	B		
CR301	A	Q307	C	R319	B	TP301	A
CR302	B-C	Q308	C	R320	B	TP302	B
CR303	C	Q309	C	R321	B	TP303	B
CR304	B	Q310	C-D	R322	A-B	TP304	B
CR305	B			R323	A-B		
CR306	B	R301	A	R324	C	U200	C
CR307	C-D	R302	A	R325	C	U301	A
CR308	D	R303	A	R326	C	U302	A
		R304	A	R327	C	U303	A-B
JMPR301	D	R305	A	R328	C	U304	B
JMPR302	D	R306	A	R329	C-D	U305	A-B
JMPR303	D	R307	A	R330	D	U306	B
JMPR304	D	R308	A	R331	D	U307	C
		R309	B	R332	C	U308	C
JMPR601	A-B	R310	B	R333	D		
		R311	B	R334	C	W3	D
P17	C-D	R312	B				

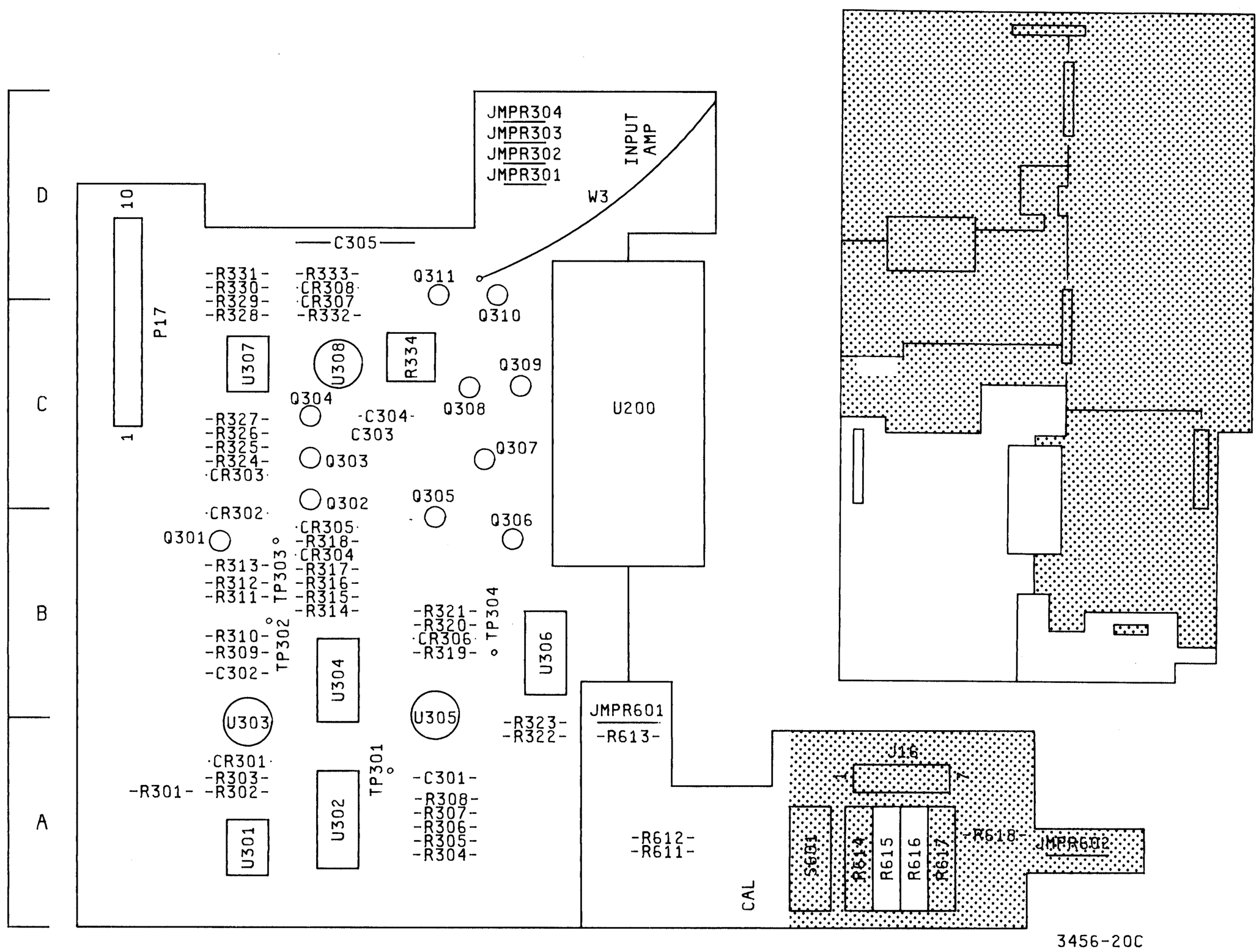

A20
03456-66520
(INPUT AMPLIFIER)

A20 Input Amplifier IC Type/Voltage Table.

IC	Type	+33 V	+30 V	+18 V	+5 V	GND	-12 Va	-18 V
U301	LM393N	- - -	- - -	- - -	8	- - -	- - -	4
U302	1858-0054	- - -	- - -	- - -	- - -	- - -	- - -	16
U303	LM201AL	7	- - -	- - -	4	- - -	- - -	- - -
U304	LM339N	- - -	- - -	- - -	3	- - -	- - -	12
U305	LM201AL	- - -	- - -	7	- - -	- - -	- - -	4
U306	MC14001BCP	- - -	- - -	- - -	- - -	14	7	- - -
U307	LF351N	- - -	7	- - -	- - -	4	- - -	- - -
U308	LM201AL	- - -	- - -	7	- - -	- - -	- - -	4

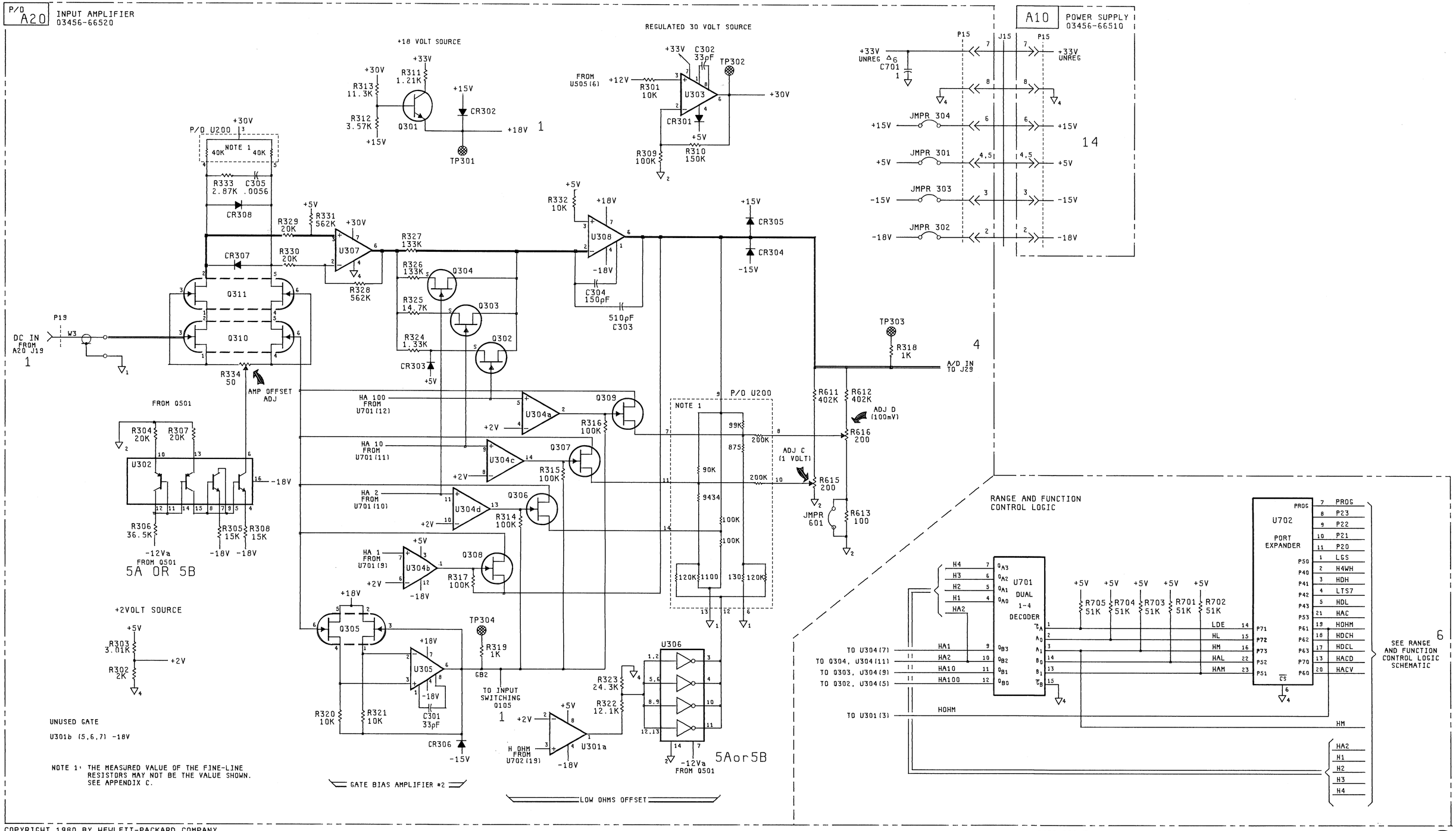

COPYRIGHT 1980 BY HEWLETT-PACKARD COMPANY

Figure 8-63. Input Amplifier Schematic (A20).

A20 Board - A/D Converter - Component Locator Table

Component	Col.	Component	Col.	Component	Col.	Component	Col.
C401	A	P15	D	R411	C	TP401	A-B
C402	B	P30	C	R412	C	TP402	C
C403	B-C			R413	B	TP403	C
C404	C	Q401	A	R414	B	TP404	C
C405	B-C	Q402	A	R415	B	TP405	D
C406	B	Q403	B	R416	B	TP406	D
C407	B	Q404	A-B	R417	C	TP407	D
C408	B-C	Q405	B	R418	C		
C409	B-C	Q406	B	R419	C	U401	B
C410	D	Q407	C	R420	C	U402	B
C411	C-D	Q408	C	R421	C	U403	B-C
				R422	C	U404	B-C
CR401	A	R401	A	R423	D	U405	B-C
CR402	C	R402	A	R424	C	U406	C
CR403	C	R403	B	R425	C	U407	C-D
CR404	D	R404	B	R426	C-D	U408	D
		R405	B	R427	C-D	U409	C-D
J29	A	R406	B	R428	D		
		R407	B	R429	D	U500	A
JMPR401	A	R408	B	R430	D		
JMPR402	A	R409	B	R431	D		
JMPR403	A	R410	C	R432	C-D		
JMPR506	A			R433	C-D		
JMPR507	A						

A20 A/D

Inputs U408		
Pin 8	Pin 4	Pin 6
HSA	HSB	HSC
1	1	1
0	0	0
0	1	0
1	0	0
0	0	1
1	0	1
0	1	1
1	1	0

Output U404	
Mode	Pin
AZ	4
S+0	–
S-0	11
S-1	7
S+2	10
S-3	6
S+4	12
S-4	5

A20 A/D Converter IC Type/Voltage Table

IC	Type	+15 V	+5 V	GND	-12 Va	-12 Vb	-15 V
U401	MC14174BCP	- - -	- - -	16	- - -	8	- - -
U402	MC14049UBCP	- - -	- - -	1	8	- - -	- - -
U403	CD4070BE	- - -	- - -	14	- - -	7	- - -
U404	CD4555BF	- - -	- - -	16	- - -	8	- - -
U405, U406,	LF351N	7	- - -	- - -	- - -	- - -	4
U407	MC14049UBCP	- - -	- - -	1	- - -	8	- - -
U408	LM339N	- - -	3	- - -	- - -	12	- - -
U409	LM339N	- - -	3	12	- - -	- - -	- - -

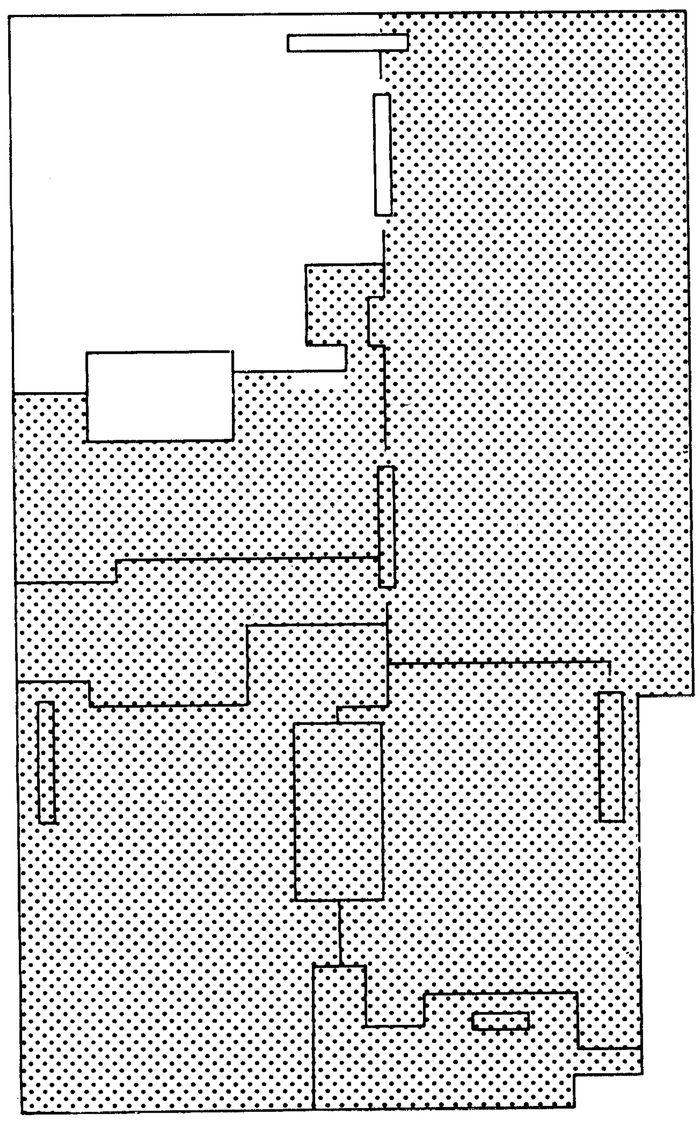

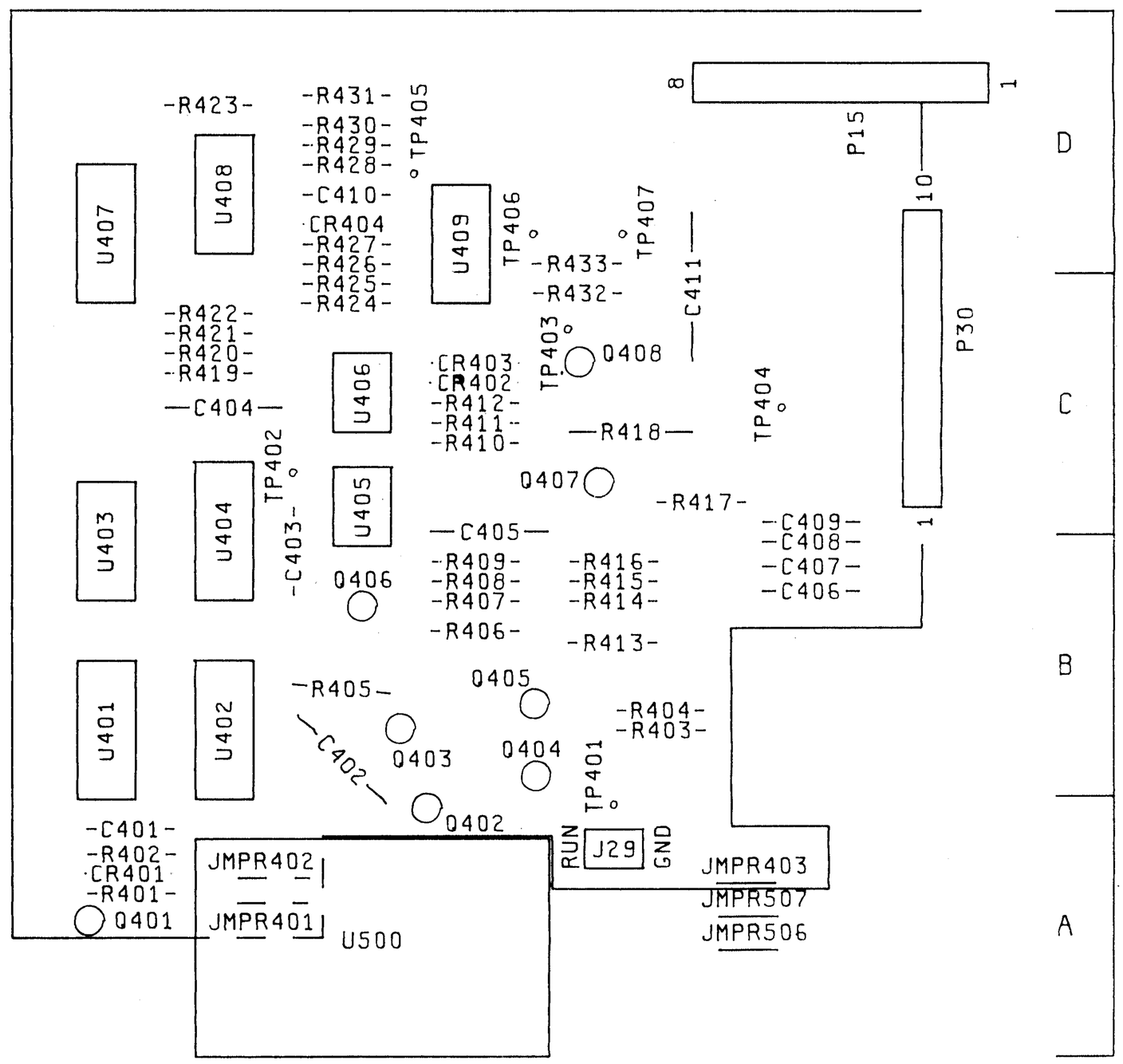

A20
03456-66520
(A/D CONVERTER)

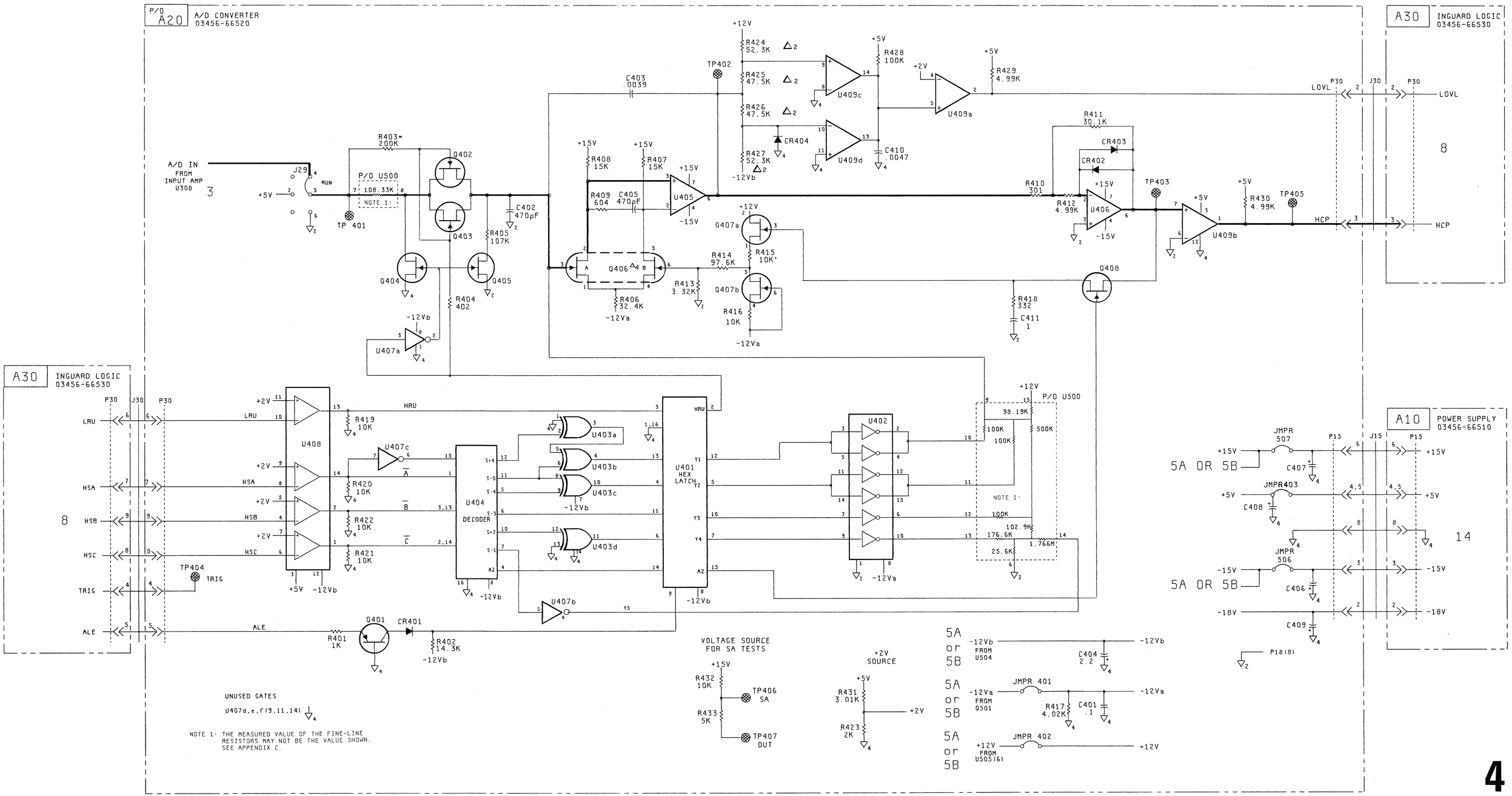

COPYRIGHT 1980 BY HEWLETT-PACKARD COMPANY

4

Figure 8-64. A/D Converter Schematic (A20).

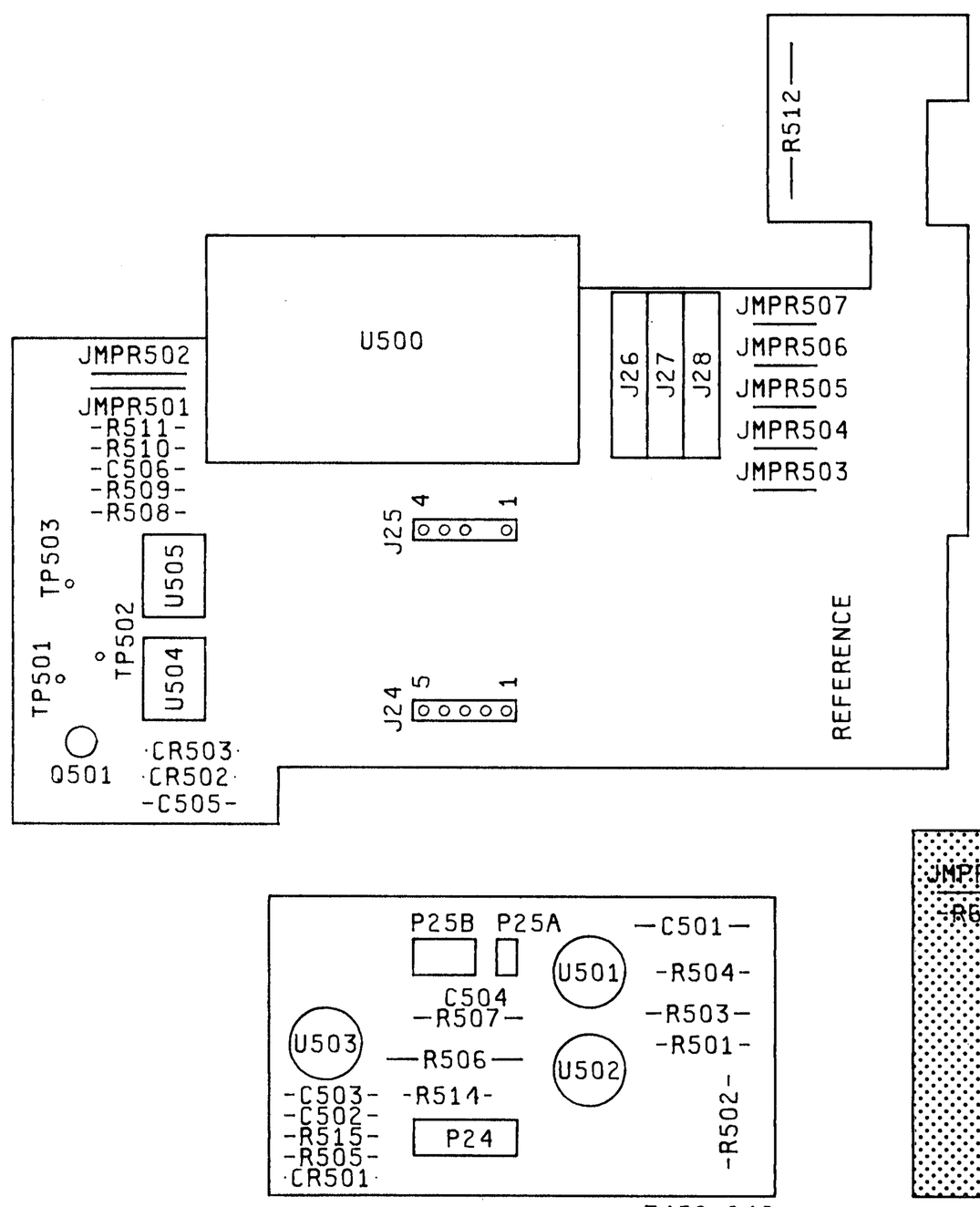

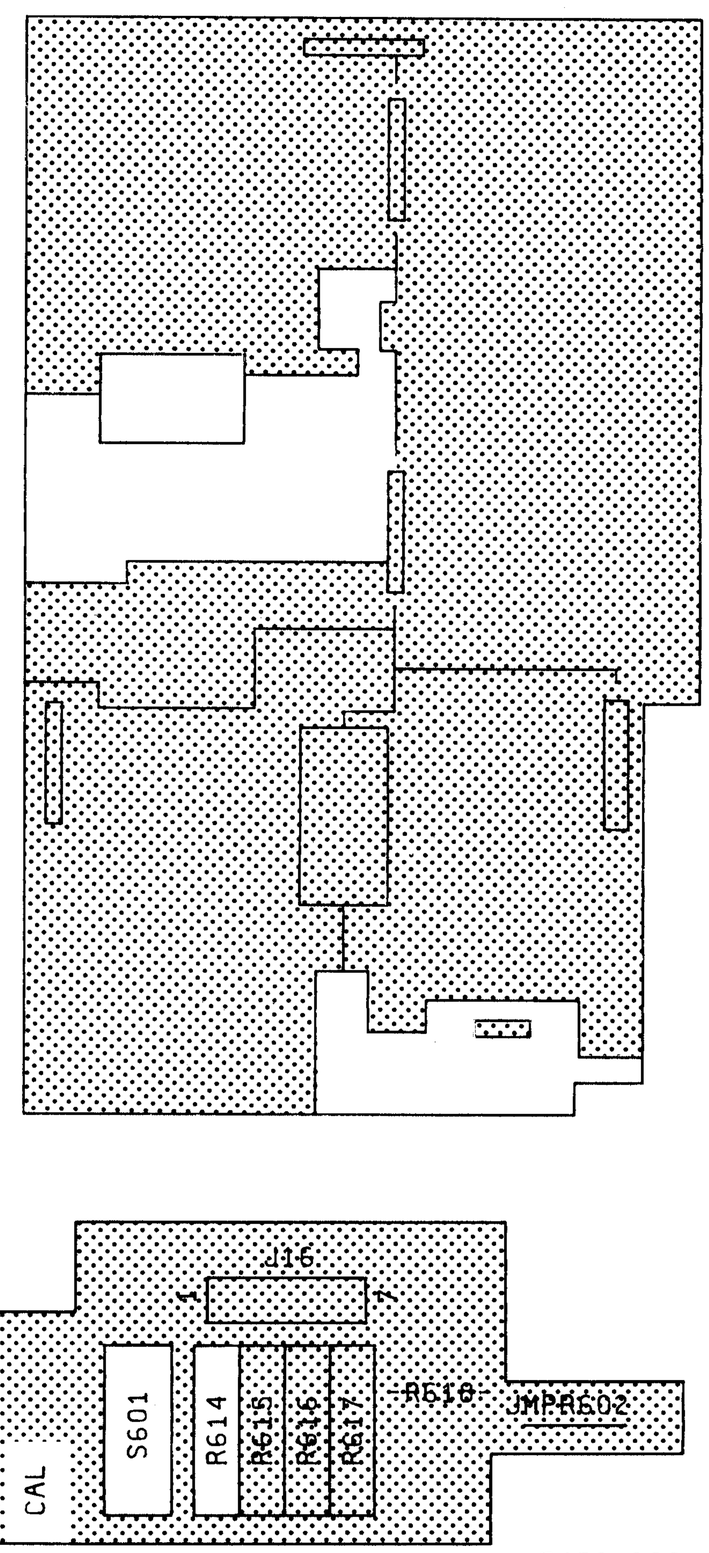

A20
03456-66520
(A24 REFERENCE)

A20/A24 Reference IC Type/Voltage Table

IC	Type	+15 V	GND	-15 V	-18 V
U500	1QD5-0045	---	---	---	---
U501	1826-0471	---	7	---	4
U502	LM207H	7	---	4	---
U503	1902-0926	---	1	---	---
U504	LM307N	---	7	--	4
U505	LM307N	7	---	4	---

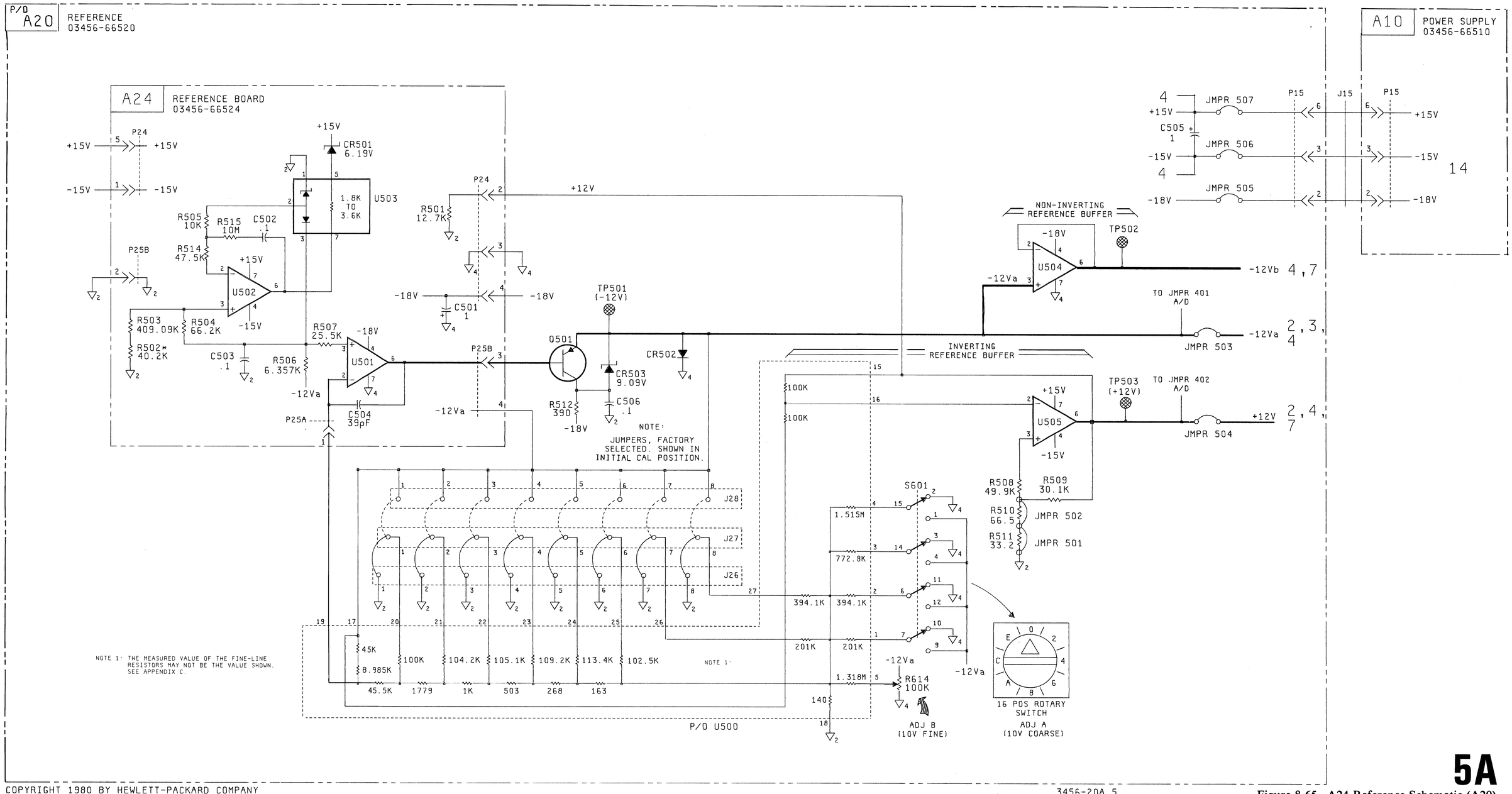

COPYRIGHT 1980 BY HEWLETT-PACKARD COMPANY

3456-20A,5

Figure 8-65. A24 Reference Schematic (A20).

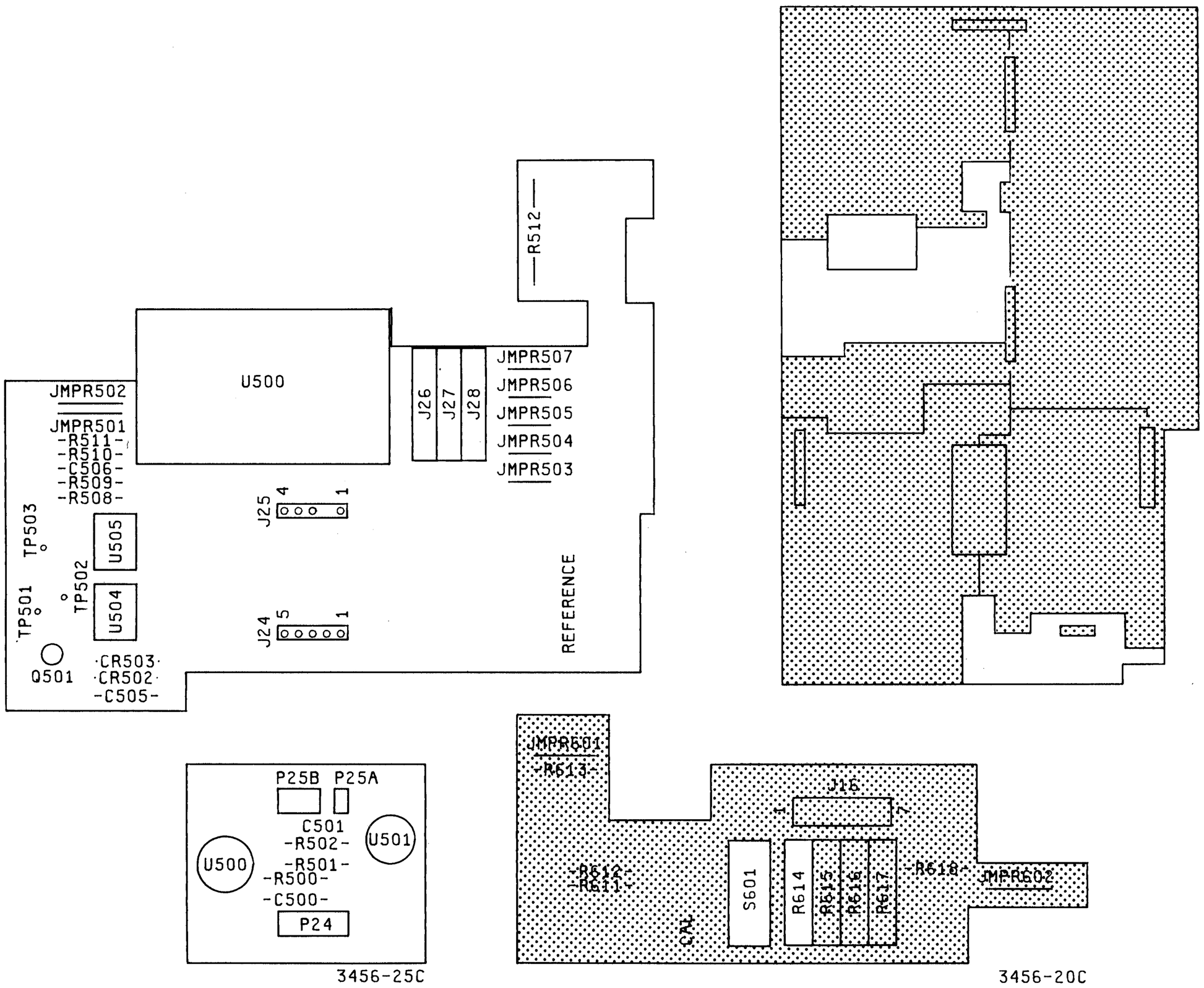

A20
03456-66520
(A25 REFERENCE)

A20/A25 Reference IC Type/Voltage Table

IC	Type	+15 V	GND	-15 V	-18 V
U500 (A20)	1QE7-0057	- - -	- - -	- - -	- - -
U500 (A25)	LM299H	3	- - -	4	- - -
U501	1826-0471	- - -	7	- - -	4
U504	LM307N	- - -	7	- - -	4
U505	LM307N	7	- - -	4	- - -

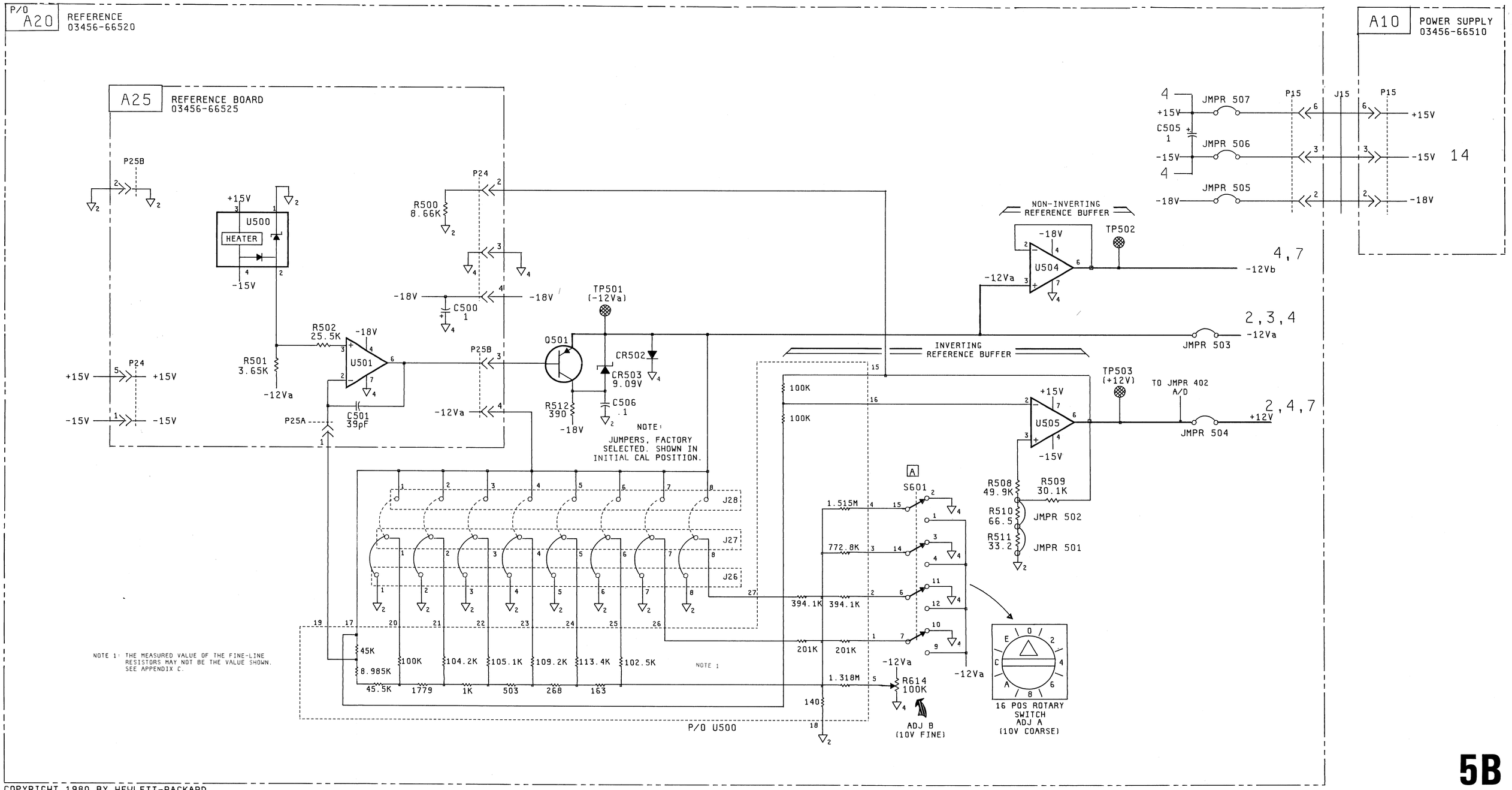

COPYRIGHT 1980 BY HEWLETT-PACKARD

3456-20A.5

Figure 8-66. A25 Reference Schematic (A20).

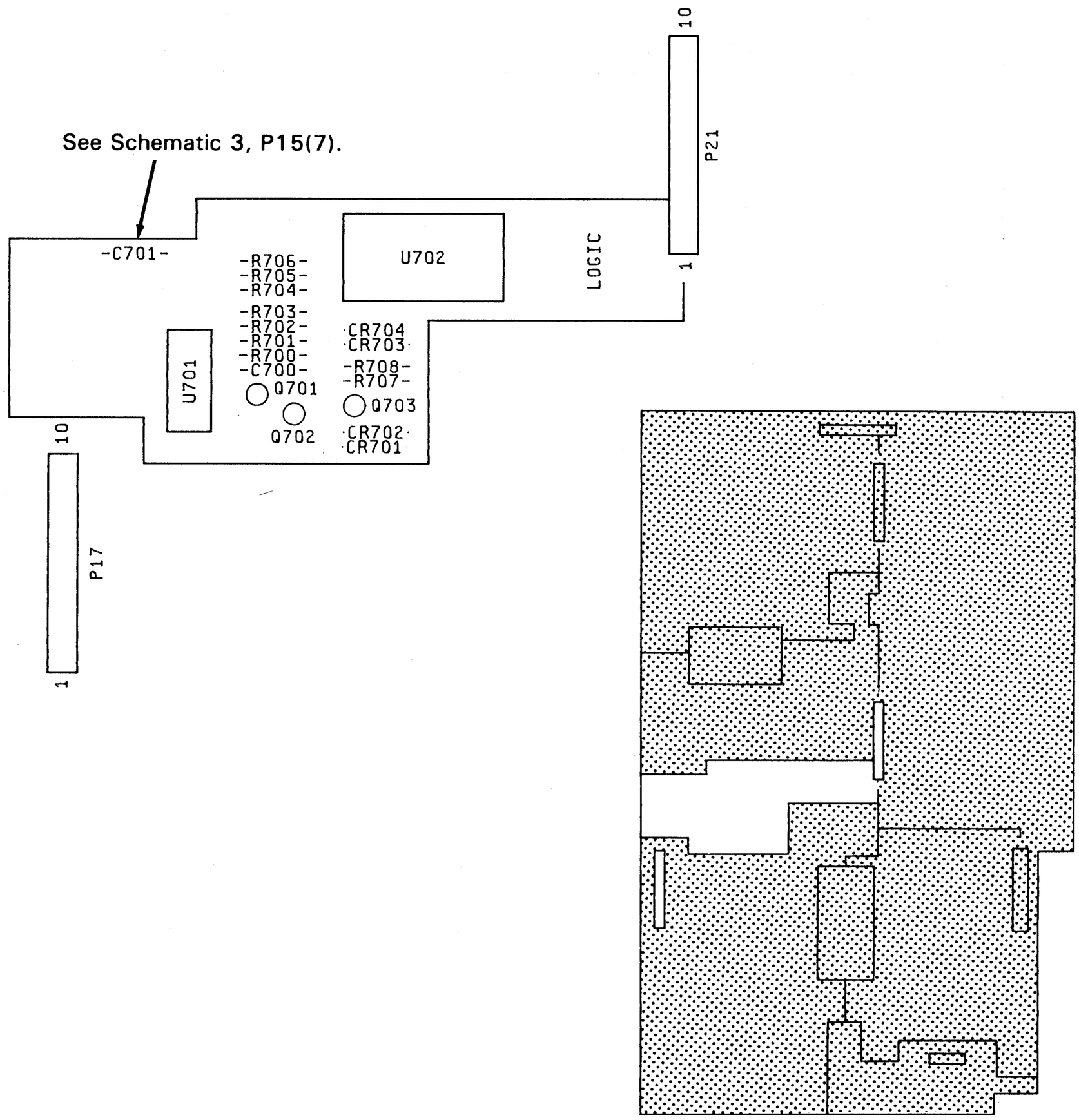

A20
03456-66520
(RANGE AND FUNCTION CONTROL LOGIC)

A20 Range and Function Control Logic

IC	Type	+5 V	GND
U701	CD4555BF	16	8
U702	P8243	24	12

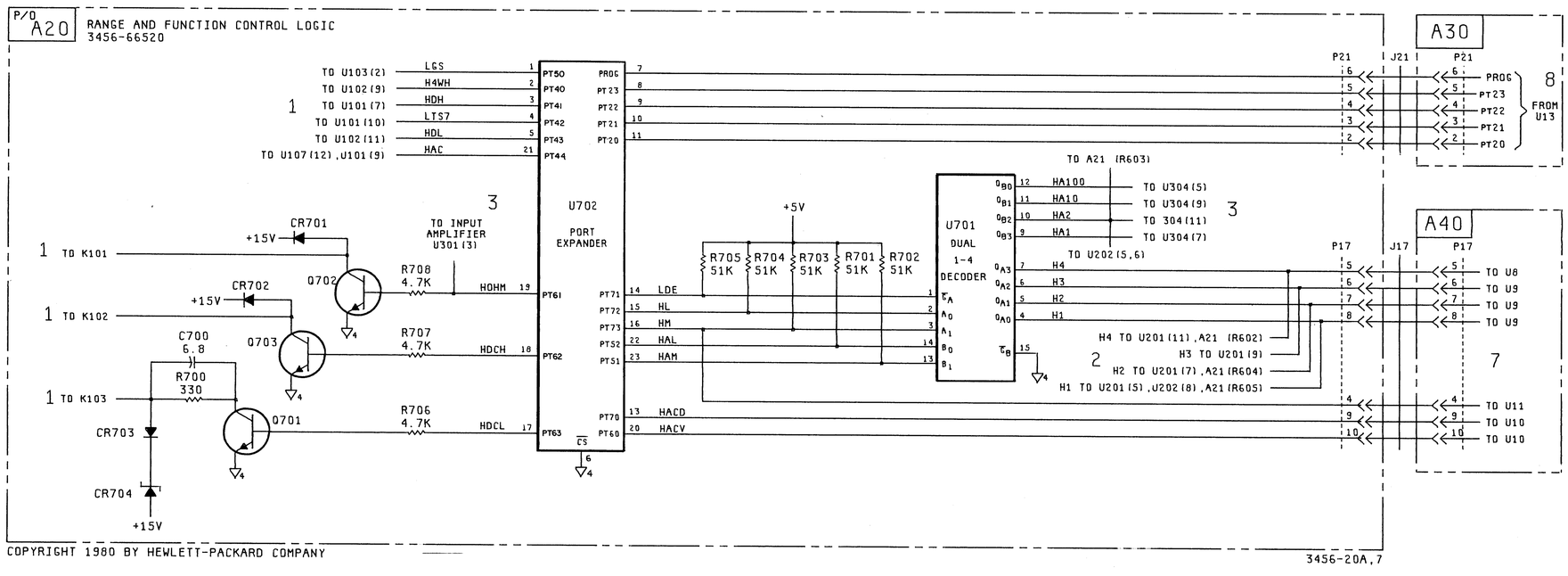

6

Figure 8-67. Range and Function Control Logic (A20).

A40 Component Locator Table

Component	Col.	Component	Col.	Component	Col.	Component	Col.
C1	B	J37	A	R9	A	R59	F
C2	B			R10	A-B	R60	E
C3	B	JMPR1	C	R11	B	R61	E-F
C4	B	JMPR2	B	R12	B	R62	E-F
C5	B	JMPR3	D-E	R13	B-C	R63	E
C6	B	JMPR4	E	R14	C	R64	F-G
C7	B-C	JMPR5	D	R15	C	R65	G
C8	C	JMPR6	C	R16	C	R66	G
C9	C	JMPR7	D	R17	D	R67	E
C10	D	JMPR8	E	R18	D	R68	E-F
C11	D	JMPR9	F	R19	D-E	R69	E-F
C12	D	JMPR10	F	R20	E	R70	F
C13	D	JMPR11	F	R21	E	R71	F
C14	C	JMPR12	F	R22	E	R72	F-G
C15	C			R23	E	R73	G
C16	D	P17	G	R24	E	R74	F
C17	D	P18	A	R25	D-E	R75	F
C18	D			R26	D	R76	F
C19	D	Q1	D	R27	E	R77	F
C20	E	Q2	D	R28	E	R78	G
C21	E	Q3	C	R29	C	R79	G
C22	E	Q4	C-D	R30	D	R80	E
C23	E-F	Q5	D	R31	E	R81	E
C24	F	Q6	C	R32	C	R82	E-F
C25	E	Q7	C	R33	C-D	R83	F-G
C26	E	Q8	C	R34	C-D	R84	F-G
C27	F	Q9	C-D	R35	D	R85	G
C28	F	Q10	D	R36	D	R86	G
C29	F	Q11	D	R37	D		
C30	G	Q12	C	R38	D	TP1	A
C31	G	Q13	C	R39	D	TP2	B
C32	F	Q14	C-D	R40	D-E	TP3	B
C33	G	Q15	E	R41	C-D	TP4	A
C34	F	Q16	E	R42	D	TP5	A
		Q17	E	R43	D	TP6	B
CR1	B	Q18	E-F	R44	D-E	TP7	C
CR2	B-C	Q19	F	R45	D-E	TP8	E
CR3	C	Q20	E	R46	E	TP9	E
CR4	C	Q21	E-F	R47	F	TP10	F-G
CR5	C	Q22	G	R48	F	TP11	F-G
		Q23	G	R49	F	TP12	E
CR7	C			R50	F	TP13	E-F
CR8	D	R1	C	R51	F	TP14	F-G
CR9	D-E	R2	C	R52	F	TP15	E
CR10	D-E	R3	B	R53	F	TP16	E-F
CR11	E	R4	B-C	R54	F	TP17	F
CR12	E	R5	B	R55	F	TP18	F-G
CR13	E	R6	A-B	R56	F		
CR14	F	R7	B	R57	F	U1	B
CR15	F	R8	C	R58	F	U2	B-C
CR16	E					U3	C-D
						U4	C-D
						U5	D-E
						U6	D-E
						U7	E
						U8	F-G
						U9	F-G
						U10	F-G
						U11	F
						U12	F-G
						U13	F

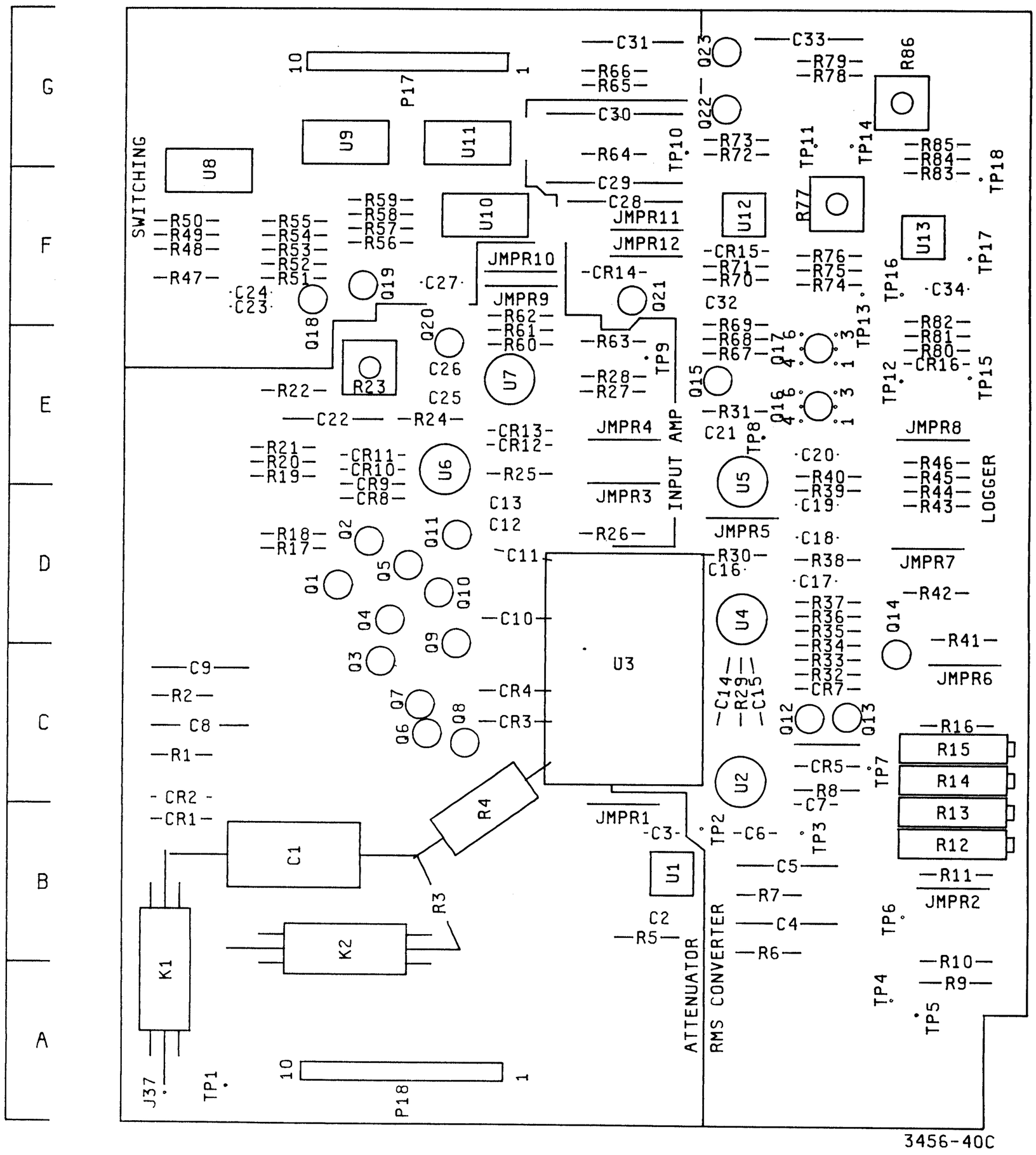

A40
03456-66540

A40 Board

IC	Type	+15 V	+5 V	-15 V	GND	IC	Type	+15 V	+5 V	-15V	GND
U1	LM301AN	7	- - -	4	- - -	U7	LF357H	7	- - -	4	- - -
U2	HA-2605-5	7	- - -	4	- - -	U8, U9	LM339N	- - -	3	12	- - -
U3	1QD6-0046	- - -	- - -	- - -	- - -	U10	SN74LS02N	- - -	14	- - -	7
U4, U5	HA-2605-5	7	- - -	4	- - -	U11	LM339N	- - -	3	12	- - -
U6	H2-2625-B0593	7	- - -	4	- - -	U12, U13	LM307N	7	- - -	4	- - -

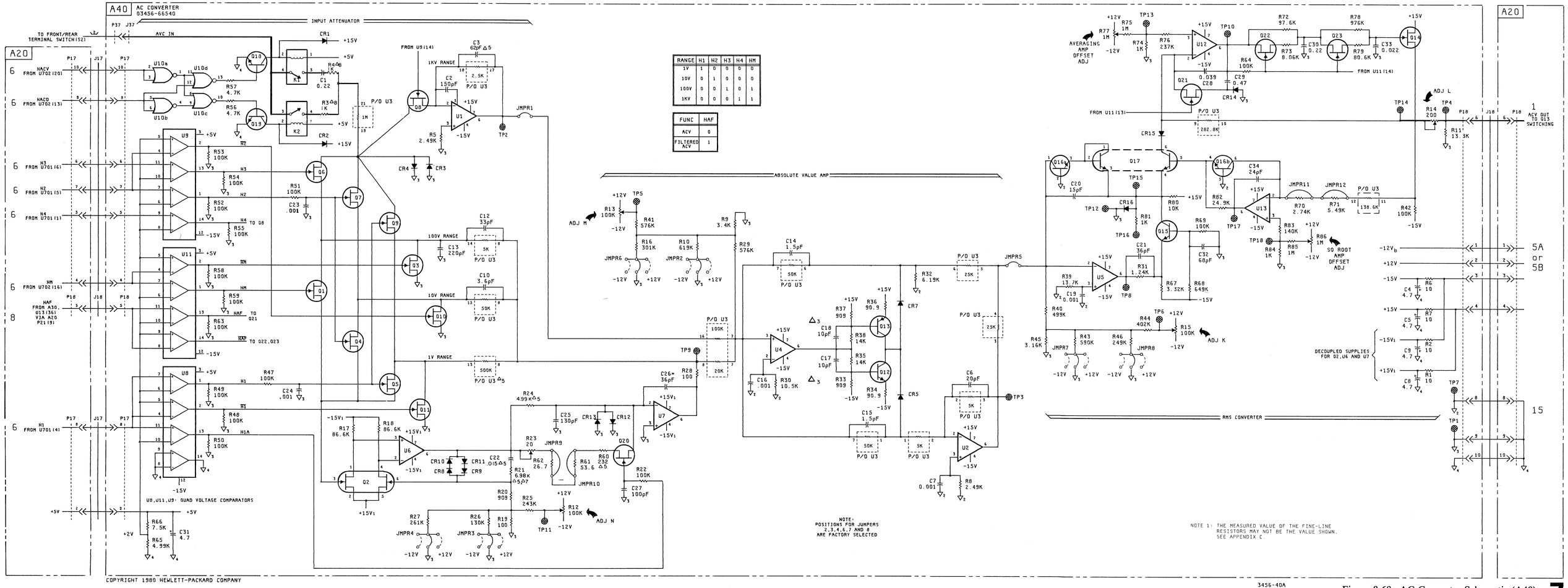

RANGE	H1	H2	H3	H4	HM
1V	1	0	0	0	0
10V	0	1	0	0	0
100V	0	0	1	0	1
1KV	0	0	0	1	1

FUNC	HAF
ACV	0
FILTERED ACV	1

Figure 8-68. AC Converter Schematic (A40).

A30 Component Locator Table

Component	Col.	Component	Col.	Component	Col.	Component	Col.
C1	A	JMPR 1	A	R13	F	U6	A
C2	A-B	JMPR 2	B	R14	F	U7	A
C3	B-C	JMPR 3	C-D	R15	F	U8	A
C4	B-C			R16	F	U9	B
C5	C-D	P21	C	R17	C	U10	B
C6	D	P30	C	R18	C	U11	B
C7	D-E					U12	B
C8	D	Q1	B-C	T1	F	U13	C
C9	B			T2	F	U14	D
C10	E	R1	A			U15	D
C11	F	R2	B	TP1	E-F	U16	D
		R3	B	TP2	F	U17	E
J31	B	R4	B	TP3	B-C	U18	E
J32	B	R5	B			U19	E
J33	B	R6	B			U20	E
J34	B-C	R7	B	U1	A	U21	E
J35	B-C	R8	D	U2	A	U22	E
J36	B-C	R9	D	U3	A	U23	F
		R10	E	U4	A	U24	F
		R11	F	U5	A	U25	A
		R12	F			Y1	B

A30 Board

IC	Type	+5	GND	IC	Type	+5	GND
U1	SN74LS04N	14	7	U13	1820-2539	40	20
U2	SN74LS00N	14	7	U14	SN74LS00N	14	7
U3	SN74LS86N	14	7	U15	SN74LS165N	16	8
U4	SN74LS02N	14	7	U16	DM81LS97N	20	10
U5	SN74LS00N	14	7	U17	SN74LS161AN	16	8
U6, U7	SN74LS74AN	14	7	U18	SN7426N	14	7
U8	SN74LS04N	14	7	U19,U20	SN74LS74AN	14	7
U9	SN74LS375N	16	8	U21	SN74LS33N	14	7
U10	SN74LS10N	14	7	U22	SN74LS30N	14	7
U11	SN74LS163AN	16	8	U23	CA3046	- - -	- - -
U12	SN74LS04N	14	7	U24	SN74LS164N	14	7
				U25	SN74LS74AN	14	7

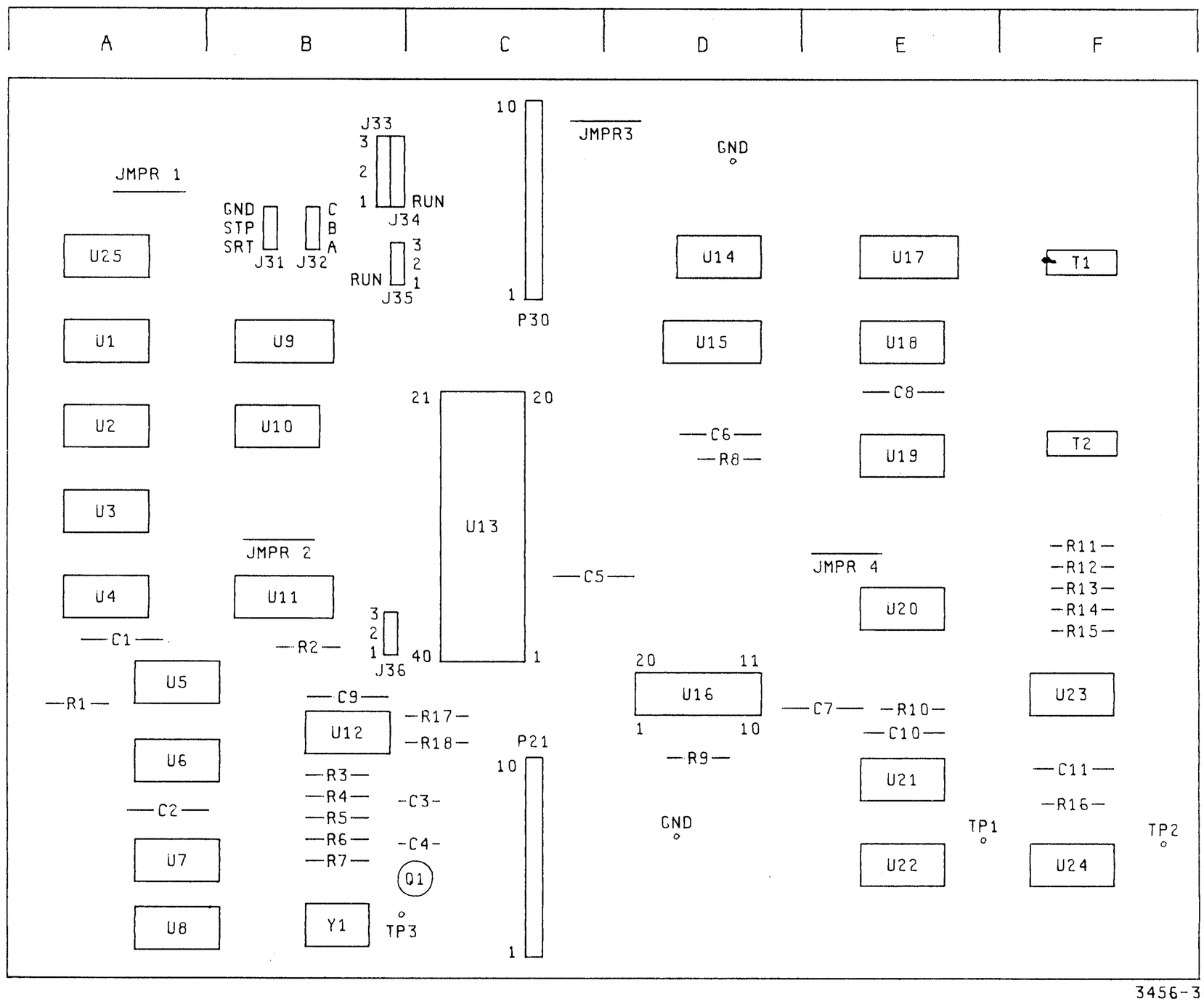

A30
03456-66530

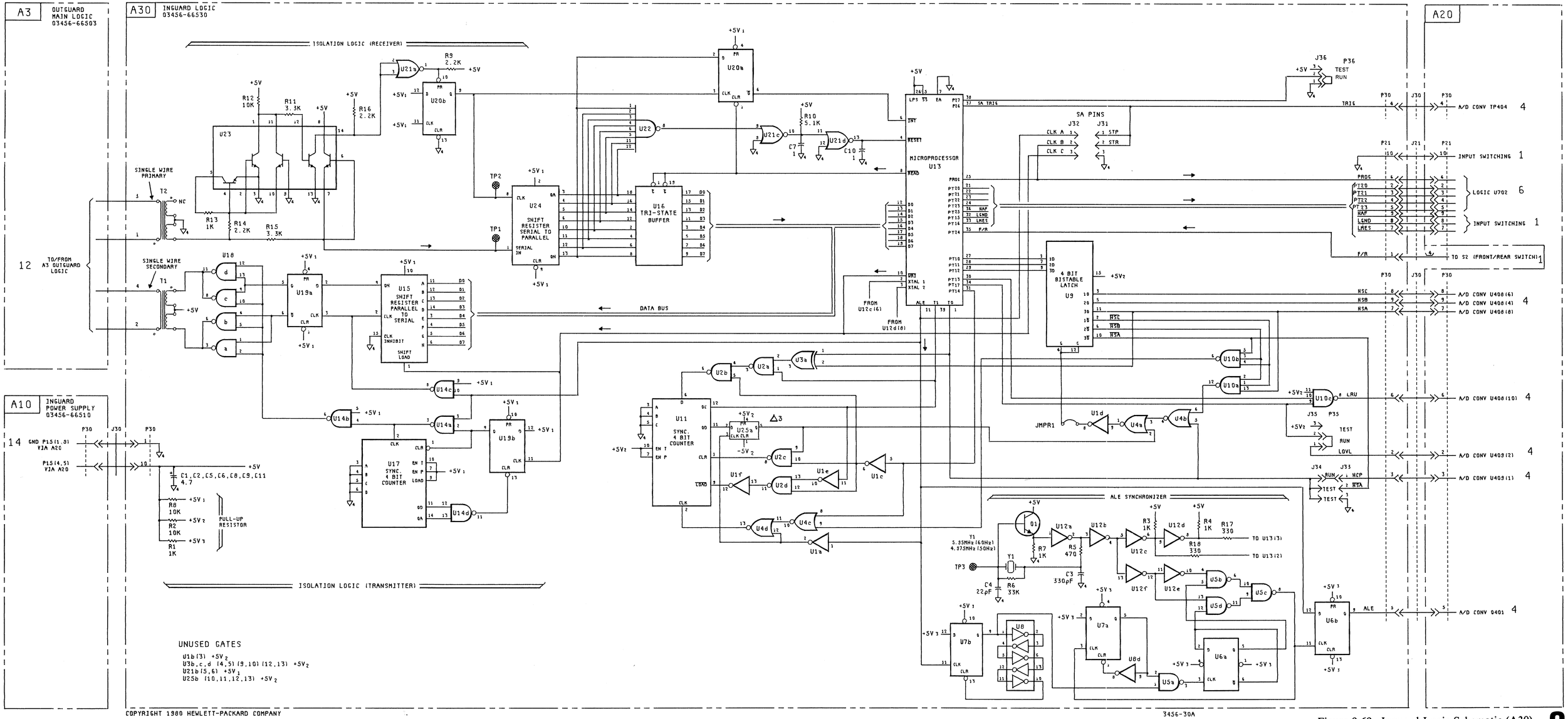

Figure 8-69. Inguard Logic Schematic (A30).

A4 Component Locator Table

Component	Col.	Component	Col.	Component	Col.	Component	Col.
C1	A	E1	A	R1	A	U1	★
C2	A	E2	A	R2	A	U2	★
C3	C	E3	B	R3	B	U3	A
C4	C	E4	B	R4	B	U4	★
C5	C	E5	C	R5	C	U5	A
C6	D	E6	C	R6	C	U6	A
C7	D	E7	C	R7	C	U7	B
C8	D	E8	D	R8	C	U8	B
C9	D	E9	D	R9	C	U9	B
C10	D	E10	E	R10	C	U10	B
C11	E			R11	D	U11	B
C12	E	J4	E	R12	D	U12	B
		J9	B-C	R13	D	U13	B
CR1	C	J10	B	R14	D	U14	B
CR2	C	J11	C	R15	D	U15	B-C
CR3	D	J12	C-D	R16	D	U16	C
CR4	D			R17	D	U17	C
CR5	D	JMPR1	B	R18	D	U18	C-D
CR6	D-E	JMPR2	B	R19	D-E	Ù19	C-D
CR7	D-E	JMPR3	D	R20	E	U20	C-D
		JMPR4	D	R21	E	U21	D
				R22	E	U22	D
		P5	C	R23	E	U23	D
		P6	C			U24	D
				TP1	C	U25	D
		L1	C	TP2	C	U26	D
				TP3	D	U27	D
						U28	E
						U29	E
						U30	E
						Y1	B-C

★ Not Used

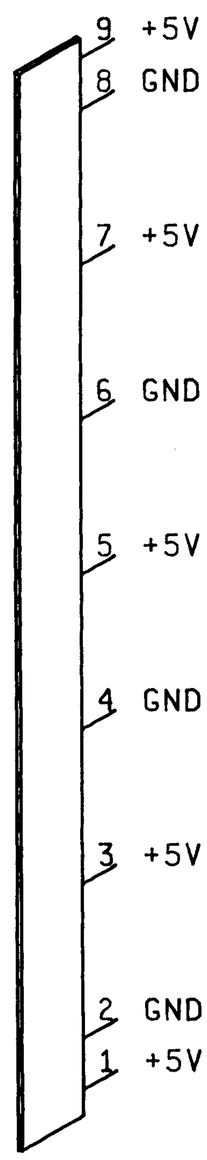

TWO-CONDUCTOR BUS (E1-E4, E6-E10) FOR +5V AND GROUND DISTRIBUTION.

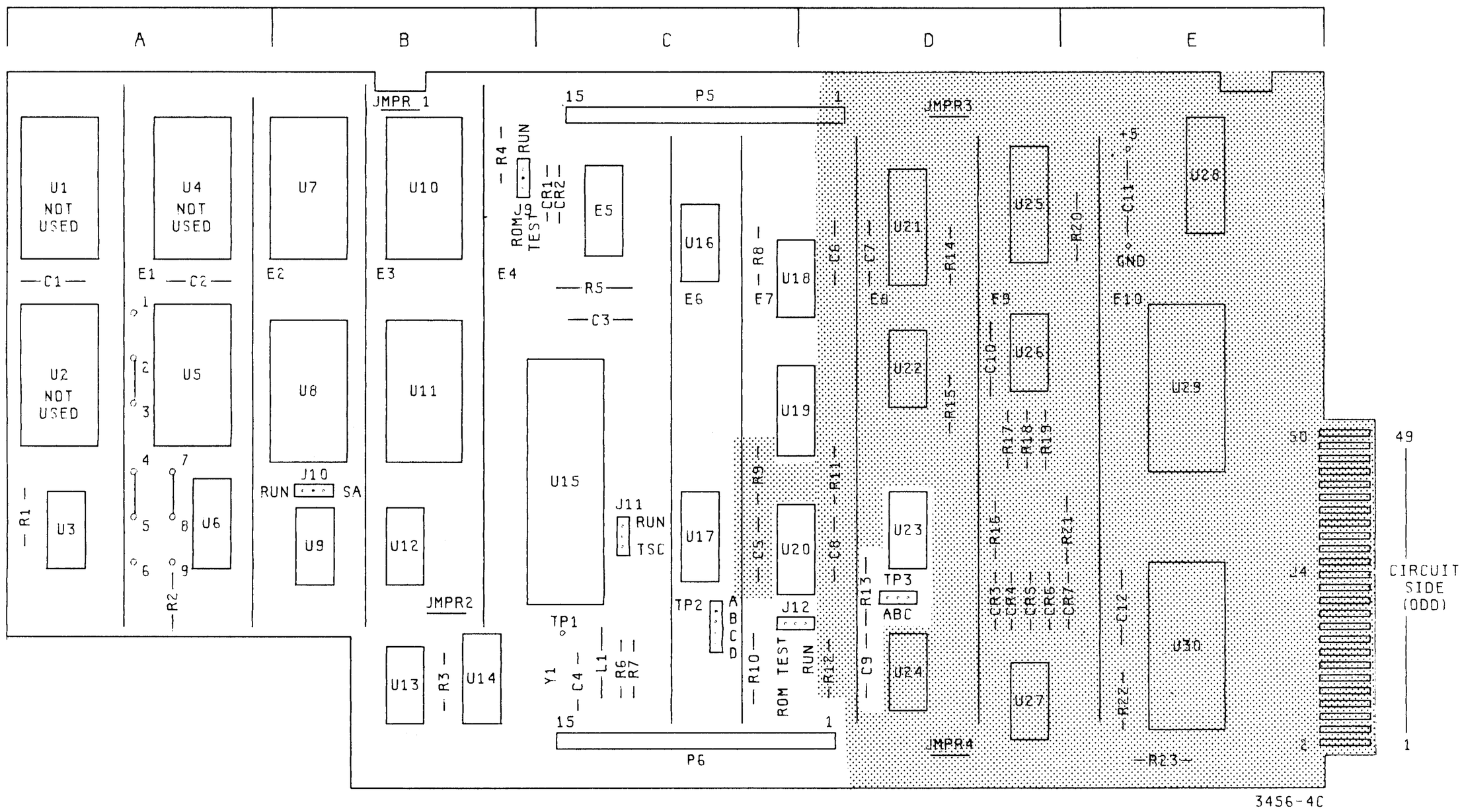

A4
03456-66504

A4 Board

IC	Type	+5	GND	IC	Type	+5	GND
U1, U2	Not Used	- - -	- - -	U18	SN74S74N	14	7
U3	SN74LS02N	14	7	U19	SN74LS138N	16	8
U4	Not Used	- - -	- - -	U20	SN74LS123N	16	8
U5	1818-1367	24	12	U21	MM74C923N	20	10
U6	SN74LS138N	16	8	U22	SN74LS74AN	14	7
U7	1818-1368	24	12	U23	SN74LS00N	14	7
U8	1818-1369	24	12	U24	SN74LS74AN	14	7
U9	SN74LS04N	14	7	U25	DM81LS97N	20	10
U10,U11	MK4118P	24	12	U26	MC14068BCP	14	7
U12	SN74LS00N	14	7	U27	SN74LS02N	14	7
U13	SN74LS74AN	14	7	U28	SN74LS377N	20	10
U14	MC6875L	16	8	U29,U30	ICM7218A	19	28
U15	MC68A00P	8	1, 21				
U16	SN74LS14N	14	7				
U17	SN74LS138N	16	8				

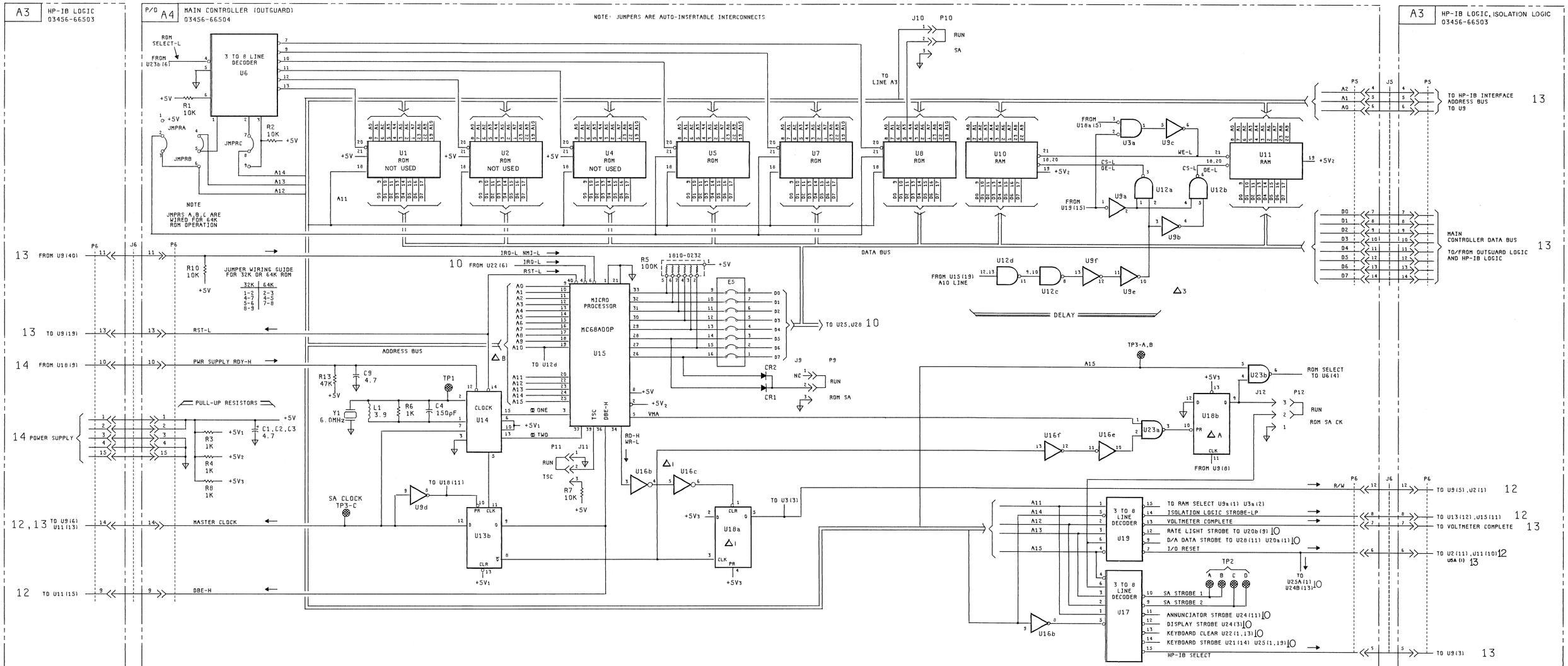

Figure 8-70. Main Controller (Outguard) Schematic (A4).

A4 Component Locator Table

Component	Col.	Component	Col.	Component	Col.	Component	Col.
C1	A	E1	A	R1	A	U1	★
C2	A	E2	A	R2	A	U2	★
C3	C	E3	B	R3	B	U3	A
C4	C	E4	B	R4	B	U4	★
C5	C	E5	C	R5	C	U5	A
C6	D	E6	C	R6	C	U6	A
C7	D	E7	C	R7	C	U7	B
C8	D	E8	D	R8	C	U8	B
C9	D	E9	D	R9	C	U9	B
C10	D	E10	E	R10	C	U10	B
C11	E			R11	D	U11	B
C12	E	J4	E	R12	D	U12	B
		J9	B-C	R13	D	U13	B
CR1	C	J10	B	R14	D	U14	B
CR2	C	J11	C	R15	D	U15	B-C
CR3	D	J12	C-D	R16	D	U16	C
CR4	D			R17	D	U17	C
CR5	D	JMPR1	B	R18	D	U18	C-D
CR6	D-E	JMPR2	B	R19	D-E	U19	C-D
CR7	D-E	JMPR3	D	R20	E	U20	C-D
		JMPR4	D	R21	E	U21	D
				R22	E	U22	D
		P5	C	R23	E	U23	D
		P6	C			U24	D
				TP1	C	U25	D
		L1	C	TP2	C	U26	D
				TP3	D	U27	D
						U28	E
						U29	E
						U30	E
						Y1	B-C

★ Not Used

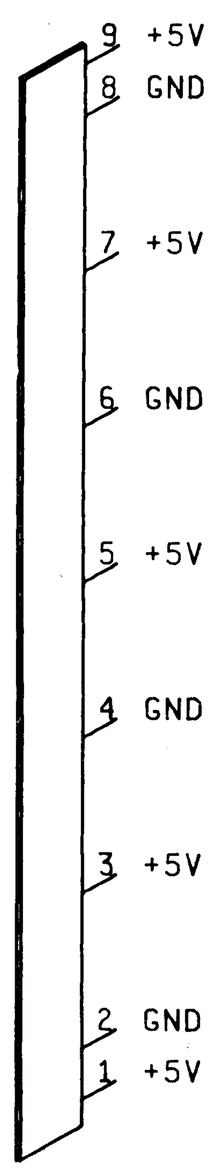

TWO-CONDUCTOR BUS (E1-E4, E6-E10) FOR +5V AND GROUND DISTRIBUTION.

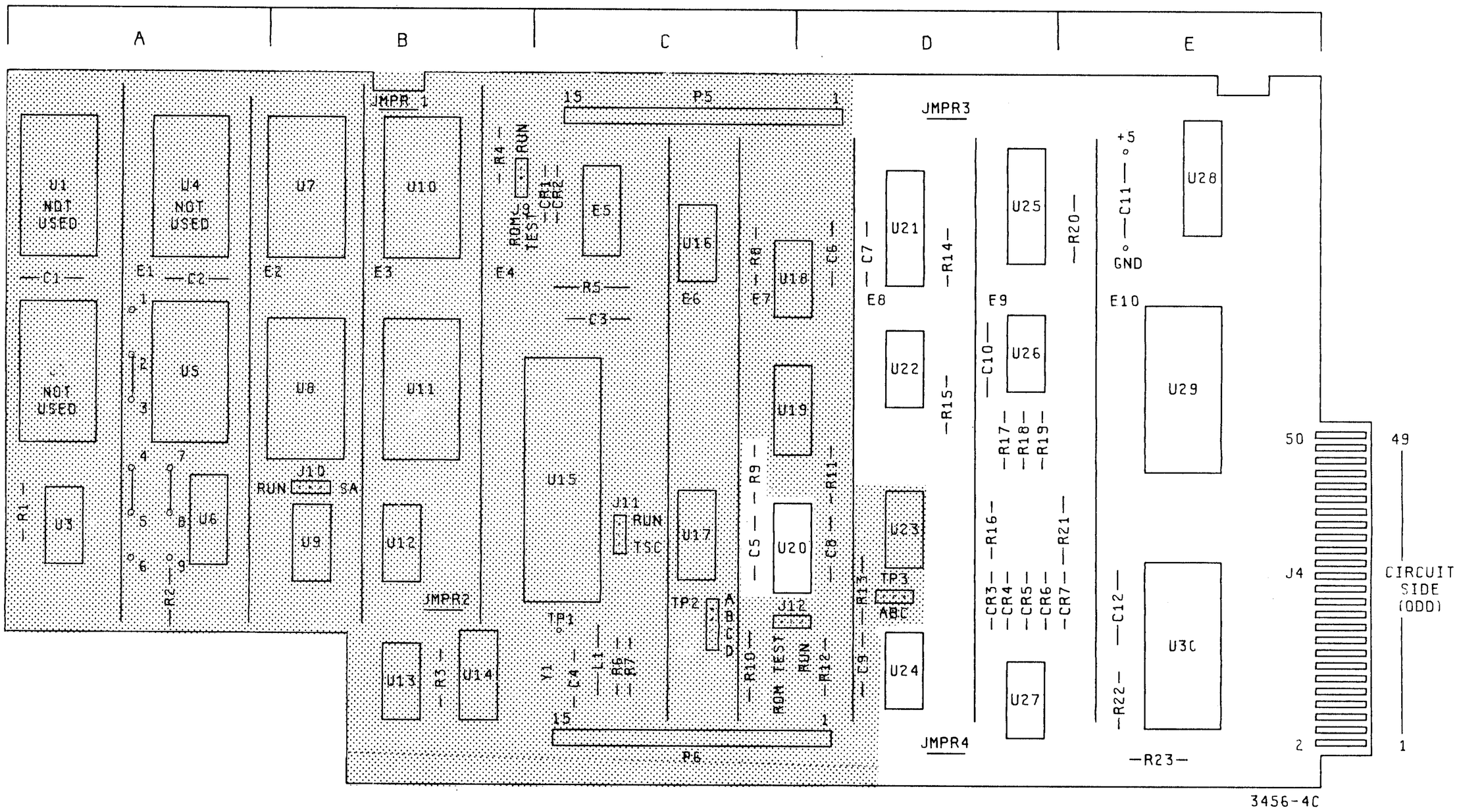

A4
03456-66504

A4 Board

IC	Type	+5	GND	IC	Type	+5	GND
U1, U2	Not Used	- - -	- - -	U18	SN74S74N	14	7
U3	SN74LS02N	14	7	U19	SN74LS138N	16	8
U4	Not Used	- - -	- - -	U20	SN74LS123N	16	8
U5	1818-1367	24	12	U21	MM74C923N	20	10
U6	SN74LS138N	16	8	U22	SN74LS74AN	14	7
U7	1818-1368	24	12	U23	SN74LS00N	14	7
U8	1818-1369	24	12	U24	SN74LS74AN	14	7
U9	SN74LS04N	14	7	U25	DM81LS97N	20	10
U10,U11	MK4118P	24	12	U26	MC14068BCP	14	7
U12	SN74LS00N	14	7	U27	SN74LS02N	14	7
U13	SN74LS74AN	14	7	U28	SN74LS377N	20	10
U14	MC6875L	16	8	U29,U30	ICM7218A	19	28
U15	MC68A00P	8	1, 21				
U16	SN74LS14N	14	7				
U17	SN74LS138N	16	8				

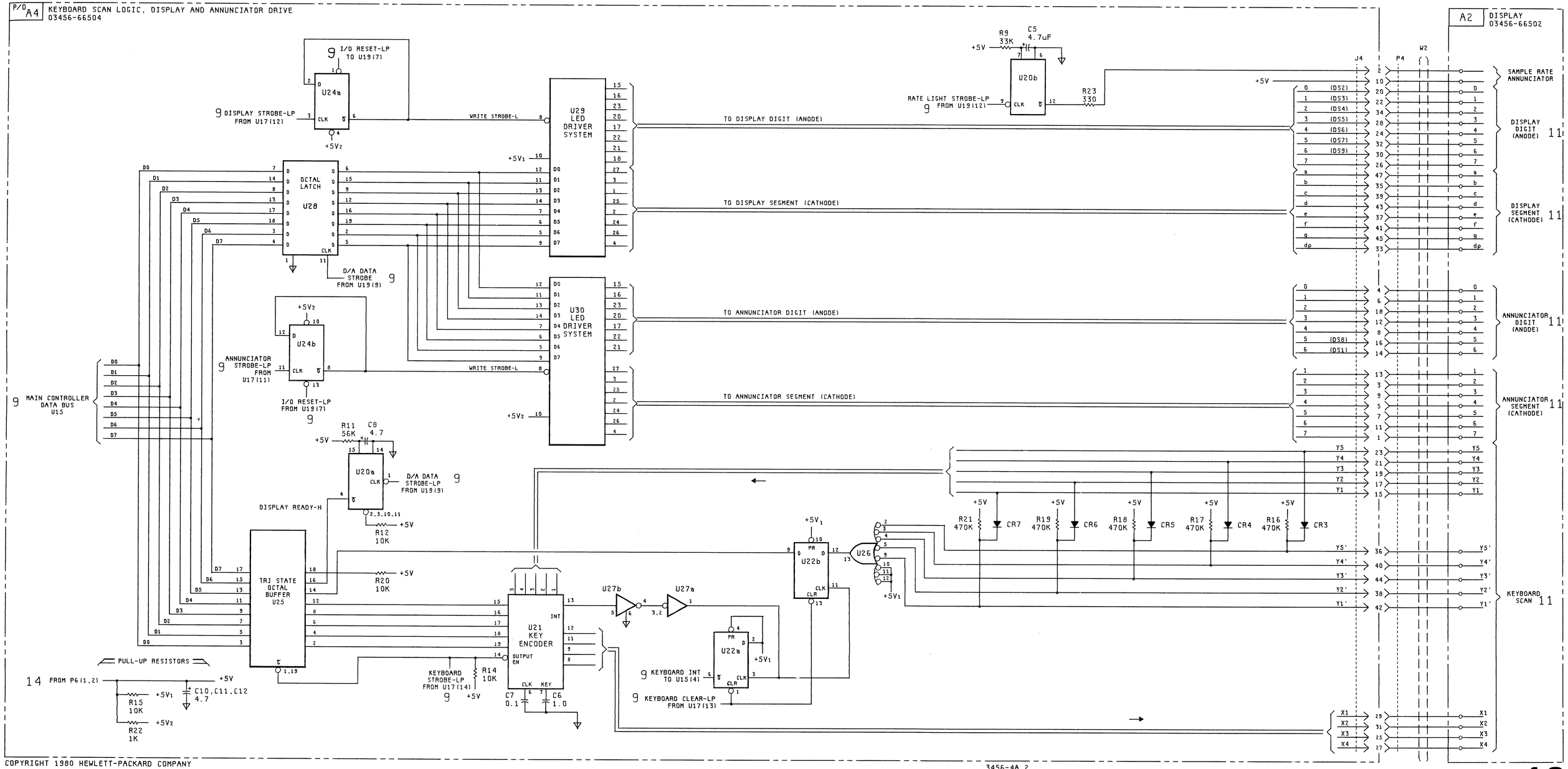

Figure 8-71. Keyboard Scan Logic, Display and Annunciator Drive Schematic (A4).

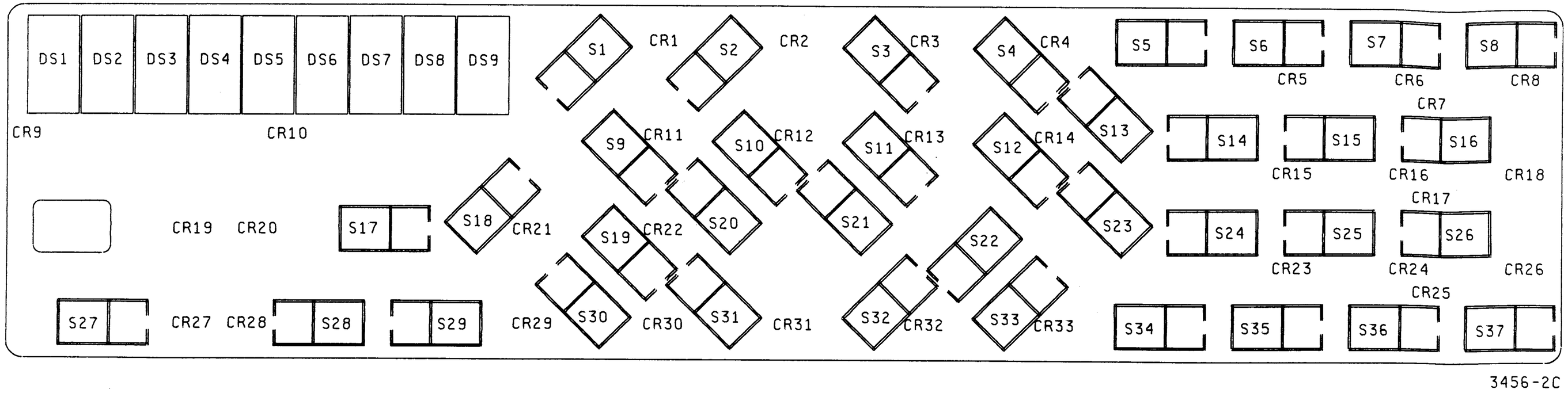

A2
03456-66502

A2 Component Locator Table

Component	Col.	Component	Col.	Component	Col.	Component	Col.
CR1	C	CR23	E-F	S1	C	S23	E
CR2	C-D	CR24	F	S2	C	S24	E
CR3	D	CR25	F	S3	D	S25	F
CR4	D-E	CR26	F	S4	D	S26	F
CR5	E-F	CR27	A	S5	E	S27	A
CR6	F	CR28	A-B	S6	E	S28	B
CR7	F	CR29	B-C	S7	F	S29	B
CR8	F	CR30	C	S8	F	S30	C
CR9	A	CR31	C-D	S9	C	S31	C
CR10	A-B	CR32	D	S10	C	S32	D
CR11	C	CR33	D-E	S11	D	S33	D
CR12	C-D			S12	D	S34	E
CR13	D	DS1	A	S13	E	S35	E
CR14	D-E	DS2	A	S14	E	S36	F
CR15	E-F	DS3	A	S15	F	S37	F
CR16	F	DS4	A	S16	F		
CR17	F	DS5	A-B	S17	B		
CR18	F	DS6	B	S18	B		
CR19	A	DS7	B	S19	C		
CR20	A-B	DS8	B	S20	C		
CR21	B-C	DS9	B	S21	D		
CR22	C			S22	D		

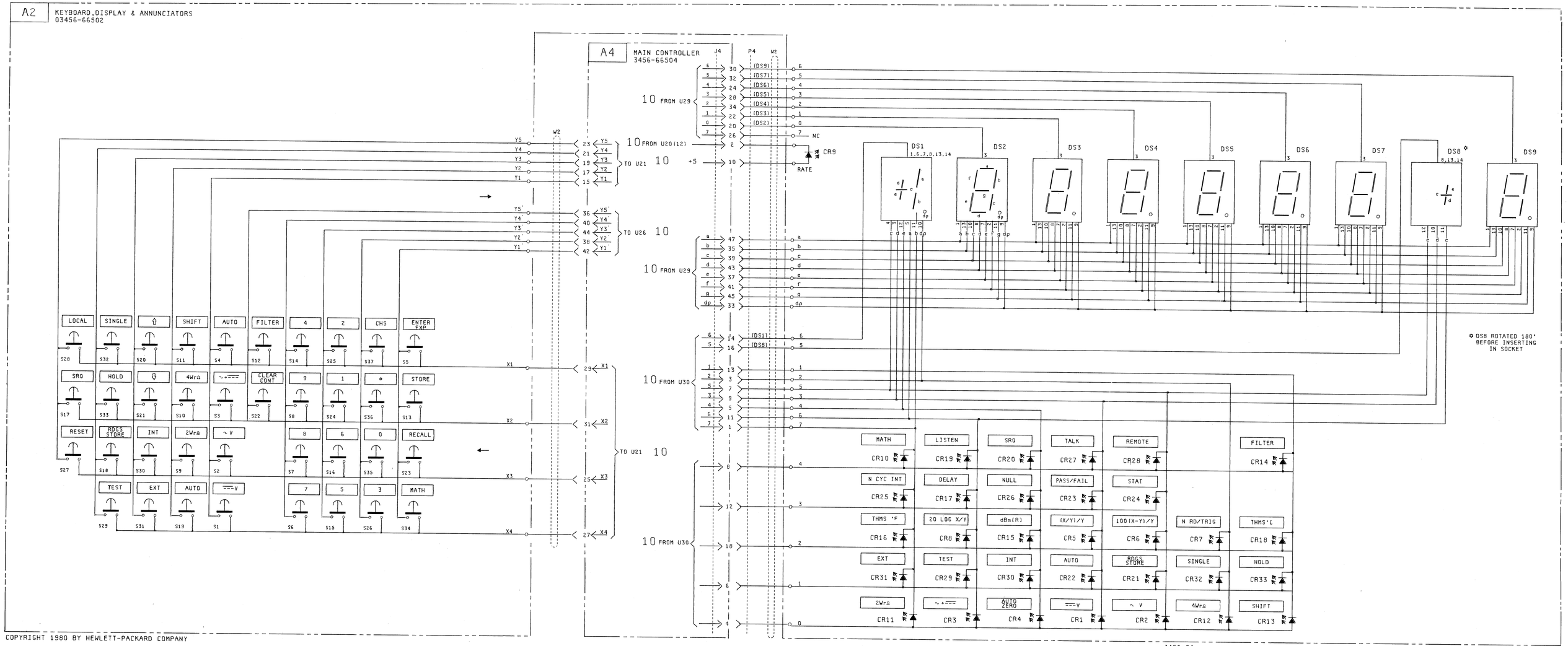

COPYRIGHT 1980 BY HEWLETT-PACKARD COMPANY

Figure 8-72. Keyboard, Display and Annunciators Schematic (A2).

A3 Component Locator Table

Component	Col.	Component	Col.	Component	Col.	Component	Col.
C1	A	E1	A	R6	C	U1	A
C2	A	E2	A-B	R7	D	U2	A
C3	A	E3	B	R8	D	U3	A
C4	B	E4	B-C	R9	D	U4	A
C5	D	E5	C	R10	D	U5	A
C6	D-E	E6	C	R11	D	U6	B
C7	E			R12	D	U7	B
C8	E	J3	E	R13	D	U8	B
C9	C	J7	E	R14	D	U9	B
		P5	C	R15	D	U10	C
CR1	A	P6	C	R16	D	U11	C
CR2	A	P8	E	R17	D	U12	C
CR3	A			R18	D	U13	C
CR4	A	R1	A	R19	E	U14	C
CR5	D	R2	A	R20	E	U15	C-D
CR6	D-E	R3	A	R21	E	U16	C-D
CR7	E	R4	A	R22	E	U17	D
CR8	E	R5	A	R23	E	U18	D
				R24	C	U19	D
				R25	C	U20	D
						U21	D-E
				T1	E	U22	D-E
				T2	E		

A3 Board

IC	Type	+5	GND	IC	Type	+5	GND
U1	SN74LS161AN	16	8	U13	SN74LS02N	14	7
U2	SN74LS04N	14	7	U14	MC3448	16	8
U3	SN74LS00N	14	7	U15	SN74LS74AN	14	7
U4	SN74LS14N	14	7	U16	DM81LS97N	20	10
U5	SN74LS74AN	14	7	U17	SN74LS112AN	16	8
U6	SN74LS04N	14	7	U18	CA3096E	- - -	- - -
U7, U8	MC3448	16	8	U19	SN7426N	14	7
U9	MC68A488P	20	1, 2	U20	DM81LS97N	20	10
U10	SN74LS165N	16	8	U21	CA3046	- - -	- - -
U11	SN74LS112AN	16	8	U22	SN74LS164N	14	7
U12	MC3448	16	8				

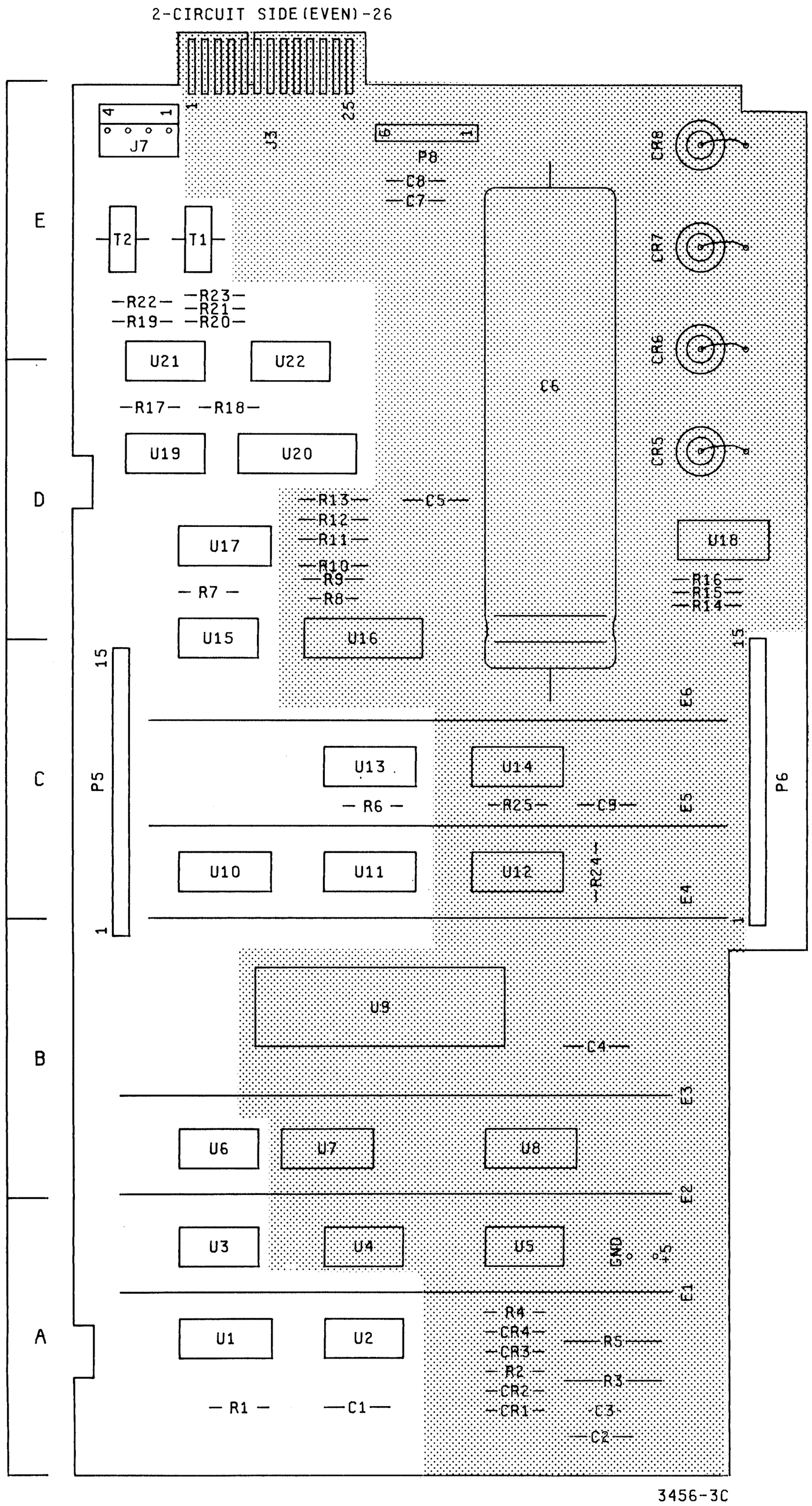

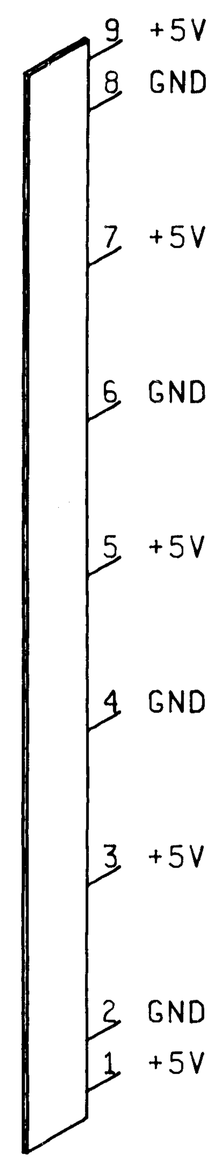

TWO-CONDUCTOR BUS (E1-E6) FOR +5V AND GROUND DISTRIBUTION.

A3
03456-66503

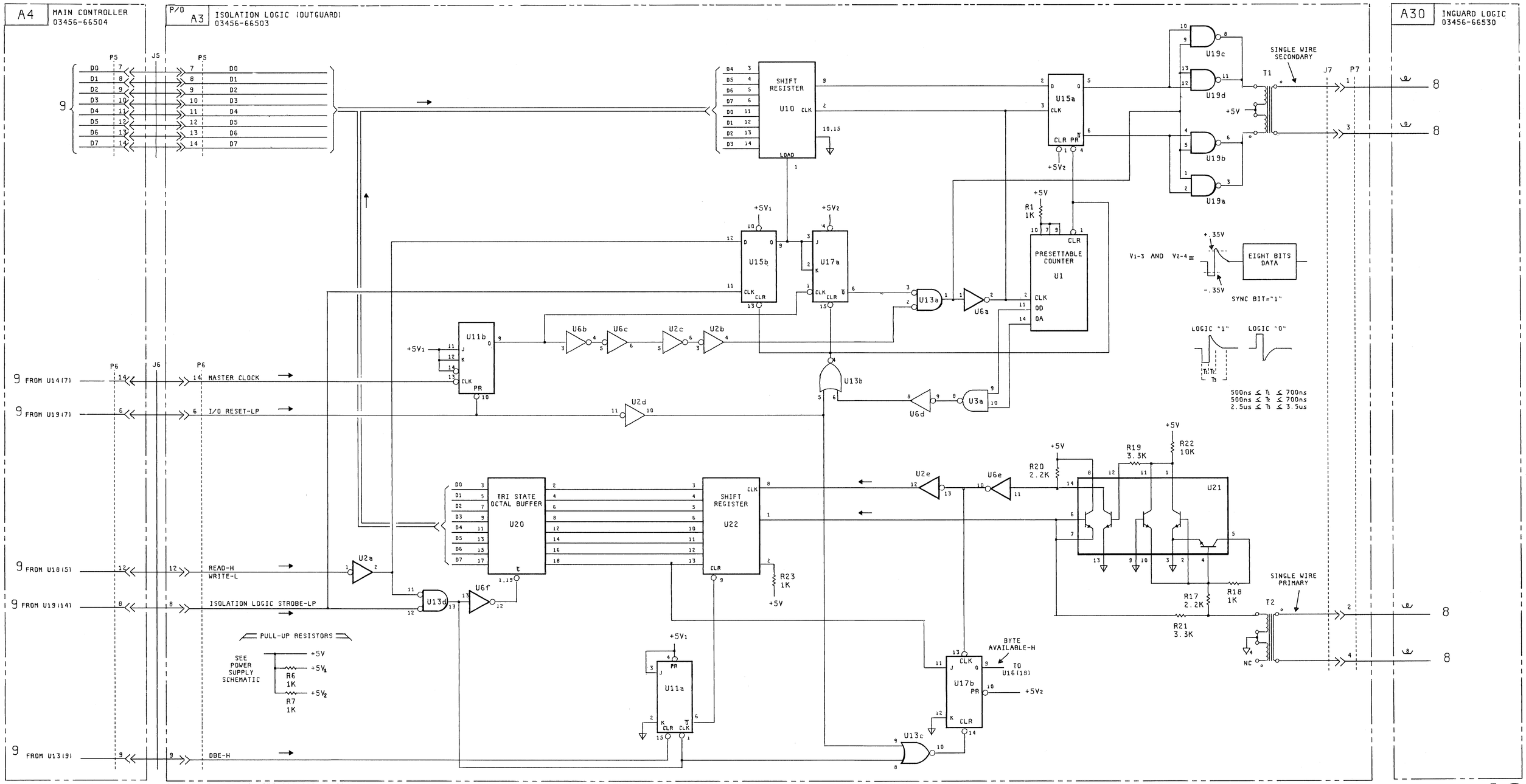

COPYRIGHT 1980 HEWLETT-PACKARD COMPANY

3456-3A,2

Figure 8-73. Isolation Logic Schematic (A3).

A3 Component Locator Table

Component	Col.	Component	Col.	Component	Col.	Component	Col.
C1	A	E1	A	R6	C	U1	A
C2	A	E2	A-B	R7	D	U2	A
C3	A	E3	B	R8	D	U3	A
C4	B	E4	B-C	R9	D	U4	A
C5	D	E5	C	R10	D	U5	A
C6	D-E	E6	C	R11	D	U6	B
C7	E			R12	D	U7	B
C8	E	J3	E	R13	D	U8	B
C9	C	J7	E	R14	D	U9	B
		P5	C	R15	D	U10	C
CR1	A	P6	C	R16	D	U11	C
CR2	A	P8	E	R17	D	U12	C
CR3	A			R18	D	U13	C
CR4	A	R1	A	R19	E	U14	C
CR5	D	R2	A	R20	E	U15	C-D
CR6	D-E	R3	A	R21	E	U16	C-D
CR7	E	R4	A	R22	E	U17	D
CR8	E	R5	A	R23	E	U18	D
				R24	C	U19	D
				R25	C	U20	D
						U21	D-E
				T1	E	U22	D-E
				T2	E		

A3 Board

IC	Type	+5	GND	IC	Type	+5	GND
U1	SN74LS161AN	16	8	U13	SN74LS02N	14	7
U2	SN74LS04N	14	7	U14	MC3448	16	8
U3	SN74LS00N	14	7	U15	SN74LS74AN	14	7
U4	SN74LS14N	14	7	U16	DM81LS97N	20	10
U5	SN74LS74AN	14	7	U17	SN74LS112AN	16	8
U6	SN74LS04N	14	7	U18	CA3096E	- - -	- - -
U7, U8	MC3448	16	8	U19	SN7426N	14	7
U9	MC68A488P	20	1, 2	U20	DM81LS97N	20	10
U10	SN74LS165N	16	8	U21	CA3046	- - -	- - -
U11	SN74LS112AN	16	8	U22	SN74LS164N	14	7
U12	MC3448	16	8				

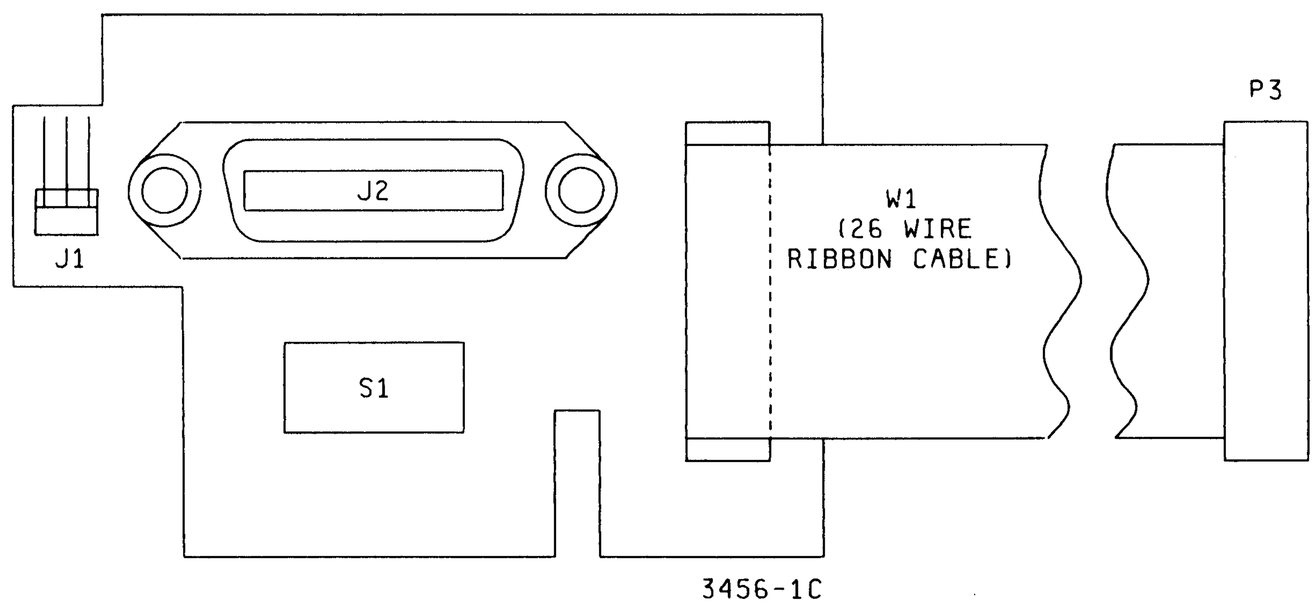

A1
03456-66501

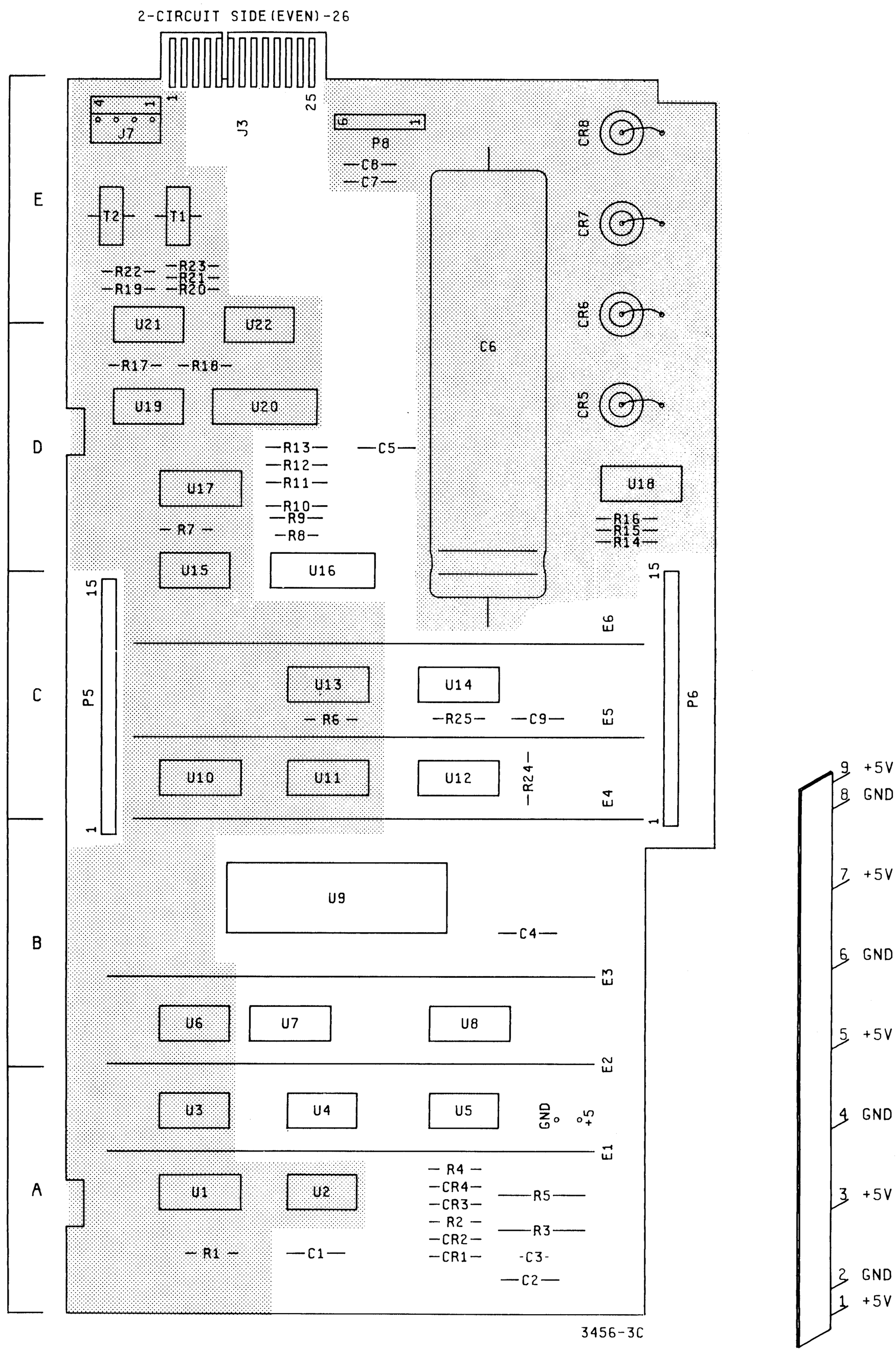

A3
03456-66503

TWO-CONDUCTOR BUS (E1-E6) FOR +5V AND GROUND DISTRIBUTION.

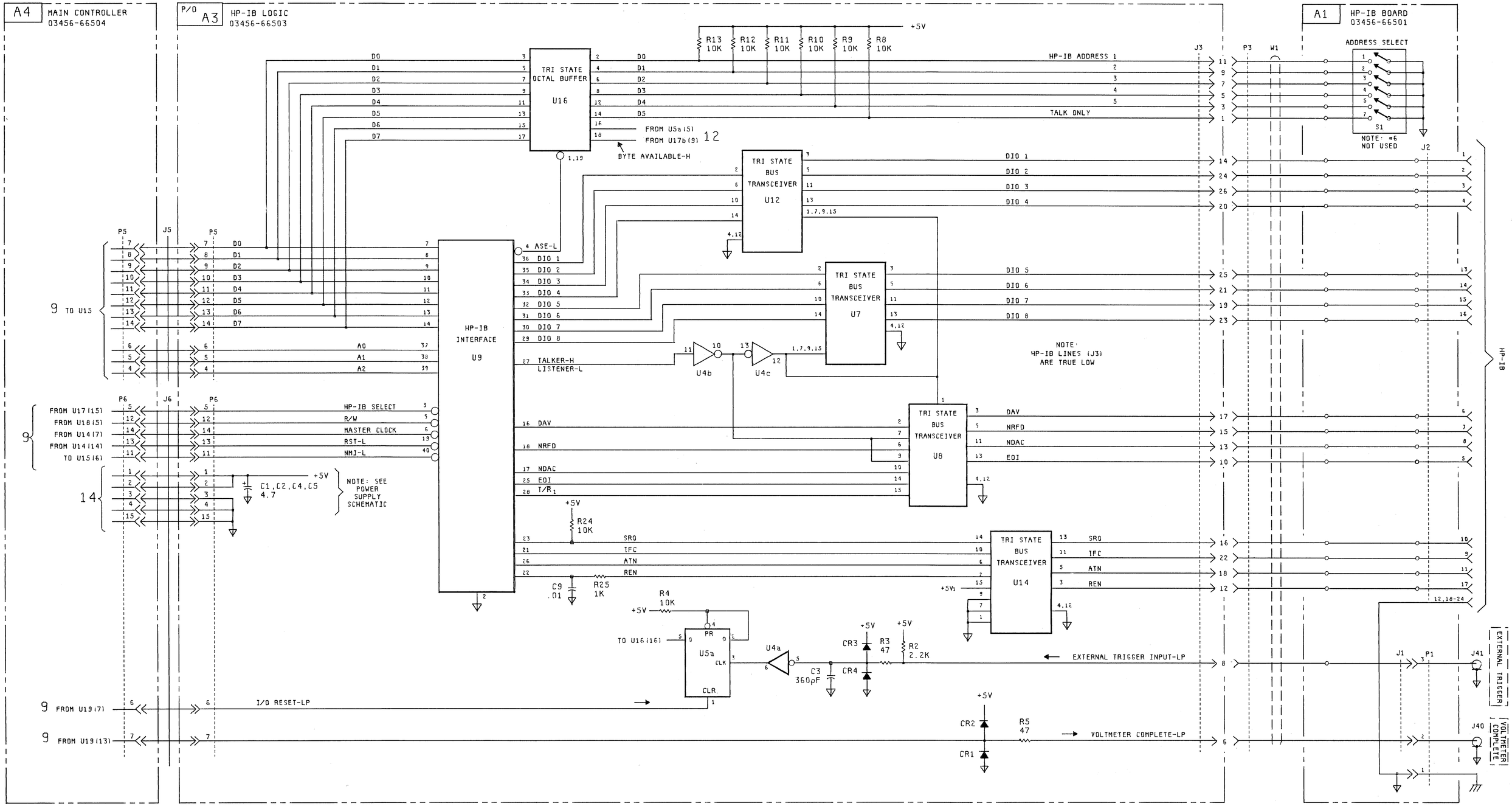

Figure 8-74. HP-IB Logic Schematic (A3).

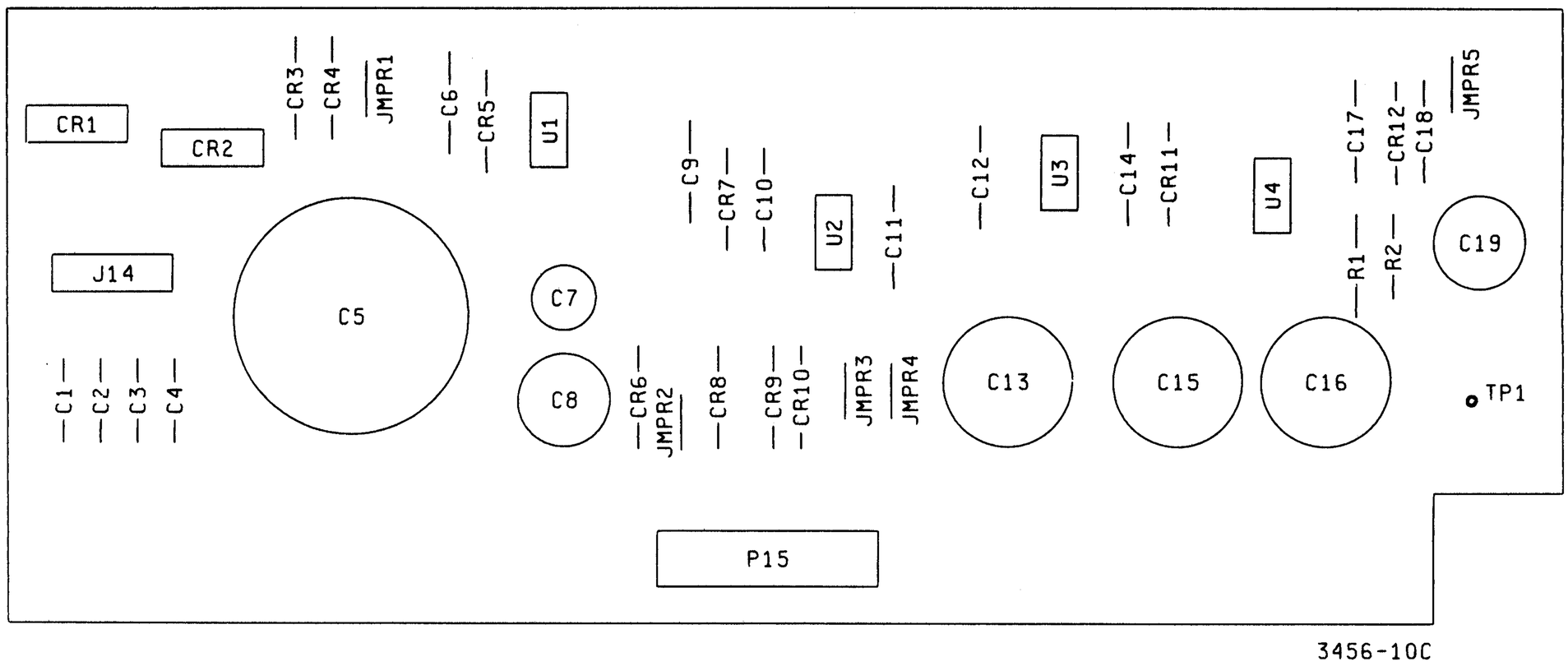

A10
03456-66510

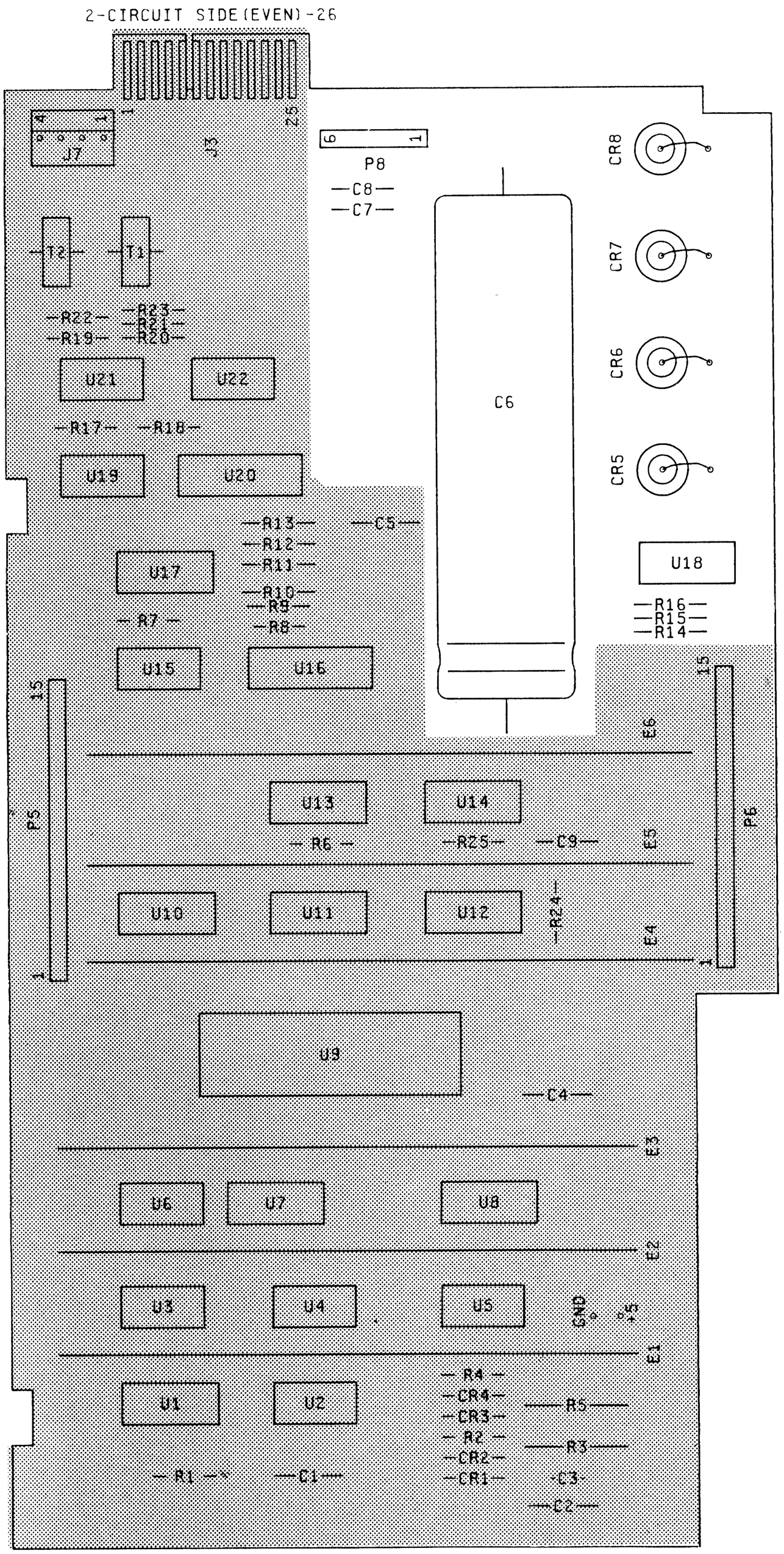

A3
03456-66503

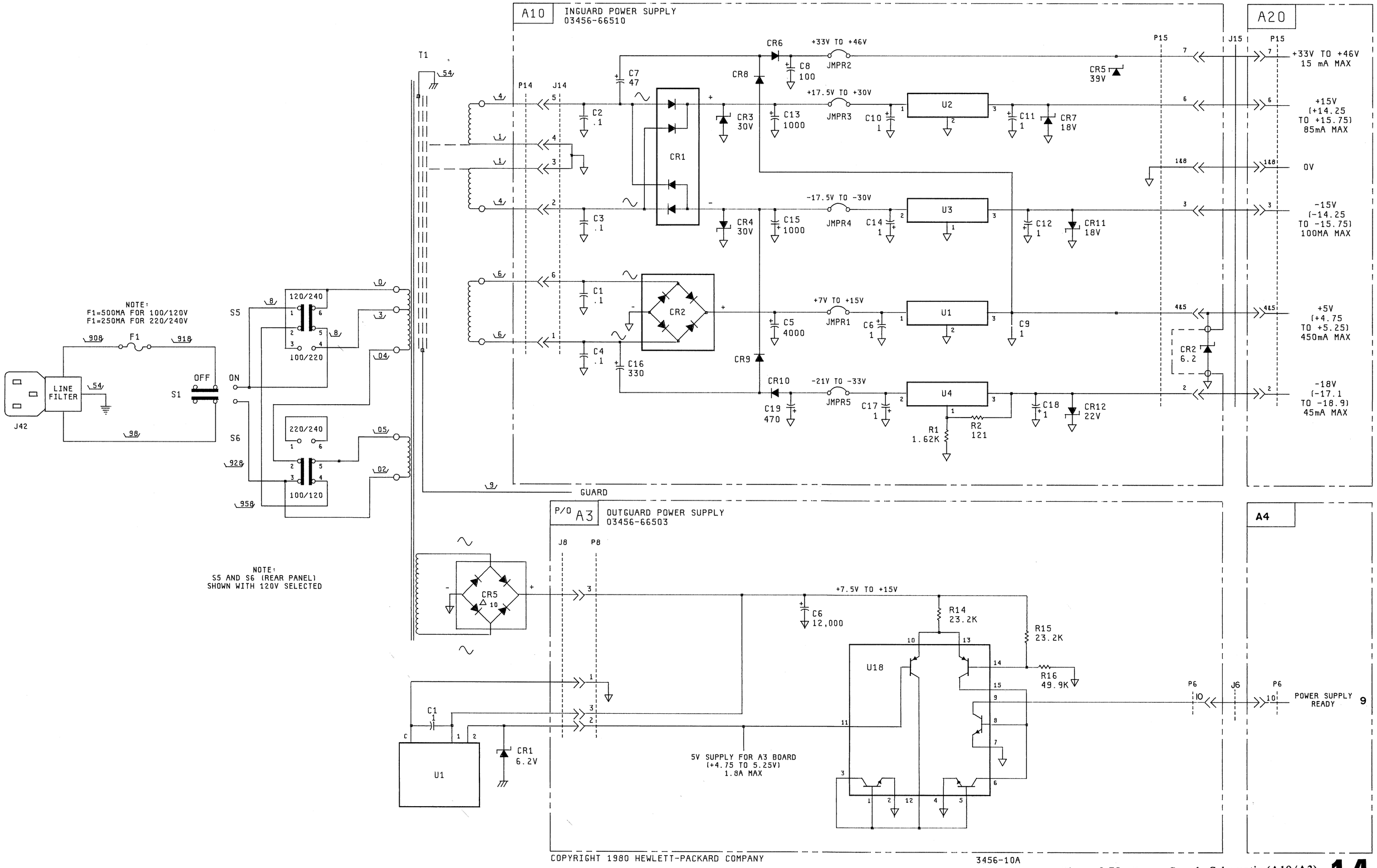

Figure 8-75. Power Supply Schematic (A10/A3).

SERVICE GROUP A

Service Group A Contents

Title	Paragraph
General	8-A-1
Pre-Troubleshooting Checks	8-A-3
Outguard Failures and Troubleshooting	8-A-5
Turn-On Failure	8-A-6
Inoperative Display	8-A-12
Inoperative Annunciator	8-A-16
Inoperative Keyboard	8-A-19
Combined Display, Annunciator, and Keyboard Failure	8-A-21
HP-IB Failure	8-A-25
Microprocessor Troubleshooting	8-A-27
Data Bus Lines Troubleshooting	8-A-29
Outguard Isolation Logic	8-A-34
General	8-A-35
Isolating the Transmitter from Receiver	8-A-37
Transmitter Troubleshooting	8-A-39
Receiver Troubleshooting	8-A-45
Miscellaneous Failures	8-A-47
External Trigger Inoperative	8-A-48
Voltmeter Complete Inoperative	8-A-50
HP-IB Address Selection Inoperative	8-A-52

SERVICE GROUP A

8-A-1. GENERAL.

8-A-2. This Service Group has the troubleshooting information for the 3456A's Outguard. Choose the correct troubleshooting information by referring to the 3456A's failures and failure symptoms, given in the Service Group.

8-A-3. PRE-TROUBLESHOOTING CHECKS.

8-A-4. Before troubleshooting the 3456A for an Outguard Failure, check the following:

a. Check the Outguard Power supply.

c. Check the clock waveforms (both phases) at A4U14, pin 13 and 15.

8-A-5. OUTGUARD FAILURES AND TROUBLESHOOTING.

8-A-6. Turn-On Failure.

8-A-7. Before troubleshooting for a Turn-On Failure, check the following:

a. Make sure the Data Bus Break (A4E5) is making good contact. If the pins are bent, the Data Line Signatures may be good but the instrument may be inoperative.

b. Make sure the Test Jumpers (A4J9, J10, J12 and J11) are in the "RUN" position. The 3456A will not turn-on, if they are in a different position.

8-A-8. A Turn-On Failure shows up when the 3456A's Data Lines (D0 to D7) are bad. Symptoms for this type of failure are:

a. The display is dead or inoperative. An inoperative display may partly or fully show a number which may jump around or is locked up. If dashes (- - - - - -) are displayed, the 3456A does not have a Turn-On Failure. It is most likely an Isolation Logic or Inguard Failure (go to Paragraph 8-A-34 for troubleshooting).

b. Keyboard is dead and/or does not respond (by pressing keys).

c. HP-IB is inoperative, although it may not be necessary to check for an HP-IB failure if the previous symptoms were noted.

8-A-9. The failure is present, if all of these symptoms are true. In other words, if only a display is inoperative and the keyboard is good, it is not a Turn-On Failure. In that case troubleshoot the display. A good practice is to troubleshoot for a turn-on failure if the 3456A is completely locked-up. Also use the Turn-On Failure troubleshooting procedure for failures that show unusual symptoms.

8-A-10. Since the Data Lines (D0 to D7) are the most likely cause of a turn-on failure, check the signatures of the lines. Do the following:

a. Turn the 3456A Off.

b. Remove the Data Lines Break A4E5 from its socket.

c. Move A4J9 and A4J12 to their respective "ROM SA" position.

d. Connect and set the Signature Analyzer as follows:

Start:	A4TP3-A	(¬_)
Stop:	A4TP3-B	(¬_)
Clock:	A4TP3-C	(¬_)
Hold:		Out
Self-Test:		Out
Gnd:	Ground Pin (next to A4C11)	

e. Turn the 3456A On and read the Data Line Signatures as given in Table 8-A-1.

8-A-11. If any or all signatures are bad or noisy, go to Flowchart A, Figure 8-A-1, for troubleshooting. If the Signatures are good, the failure is most likely in the RAM circuitry (RAMs, RAM Select, etc.) or Strobe Decoders (A4U17, U19, and associated circuitry). Go to Flowchart B, Figure 8-A-2, for troubleshooting. If SA does not work at all or the signatures are locked-up (same signatures), troubleshoot the processor circuitry (see Paragraph 8-A-27).

8-A-12. Inoperative Display.

8-A-13. All the digits, except for the most significant digit, first decimal point, and both polarity indicators, are controlled by A4U29. An inoperative display is when:

a. The digits are missing one or more segment.

b. One or more digit is not lit.

c. One or more digit (and/or) segment is always lit.

8-A-14. Since the most significant digit, first decimal point, and both polarity indicators are controlled by A4U30, a failure of these is considered an Inoperative Annunciator (see Paragraph 8-A-16). For a Combined Annunciator and Display failure use Paragraph 8-A-21.

Table 8-A-1. Data Bus (D0-D7) Signatures.

Data Bus	A4P5 Pin #	Signature
D0	7	751A
D1	8	28A1
D2	9	1748
D3	10	CCCA
D4	11	3193
D5	12	U6H8
D6	13	5997
D7	14	5P4A

Note. Set the Signature Analyzer to:

Start: ( ) A4TP3-A
Stop: ( ) A4TP3-B
Clock: ( ) A4TP3-C
The "1" (High, +5 V) signature is: 0003.

(see note below).

Table 8-A-2. Address Bus (A0-A15) Signatures.

Address Bus	A4U15 Pin #	Signature
A0	9	UUUU
A1	10	FFFF
A2	11	8484
A3	12	P763
A4	13	1U5P
A5	14	0356
A6	15	U759
A7	16	6F9A
A8	17	7791
A9	18	6321
A10	19	37C5
A11	20	6U28
A12	22	4FCA
A13	23	4868
A14	24	9UP1
A15	25	0001

Note. Set the Signature Analyzer to:

Start: ( ) A4TP3-A
Stop: ( ) A4TP3-B
Clock: ( ) A4TP3-C
The "1" (High, +5V) signature is: 0003.

NOTE

Refer to Section VII (Backdating) of this manual for the signatures, if the 3456A is equipped with ROMs having part numbers 1818-1367, 1818-1368, and 1818-1369 for A4U5, A4U7, and A4U8, respectively. ROMs with these numbers may be installed for instruments with serial numbers 2015A-03070 and below.

Table 8-A-3. Rom Select (A4U6) Signatures.

A4U6 Pin #	Signatures
1	4868
2	9UP1
3	0003
4	0002
5	0000
6	0003
7	1183
8	—
9	64HF
10	29A4
11	5FUA
12	0003
13	0003

Note: Set the Signature Analyzer to:

Start: ( ) A4TP3-A
Stop: ( ) A4TP3-B
Clock: ( ) A4TP3-C
The "1" (High, +5V) signature is: 0003.

Table 8-A-4. Individual ROM Signatures.

ROM	Start/Stop Connection	ROM Pin #	Signature
A4U5	A4U6 pin 10	9	892F
		10	1263
		11	1302
		13	8547
		14	0654
		15	0532
		16	HA6P
		17	2A22
A4U7	A4U6 pin 9	9	9128
		10	82FU
		11	3592
		13	FF9A
		14	0A13
		15	90A8
		16	4C71
		17	835C
A4U8	A4U6 pin 7	9	8H3H
		10	H11P
		11	71F4
		13	731H
		14	0HF2
		15	C0F4
		16	AC73
		17	9PU5

Note. Set the Signature Analyzer to:

Start: ( ) see Table
Stop: ( ) see Table
Clock: ( ) A4TP3-C
The "1" (High, +5V) signature is: 1180.

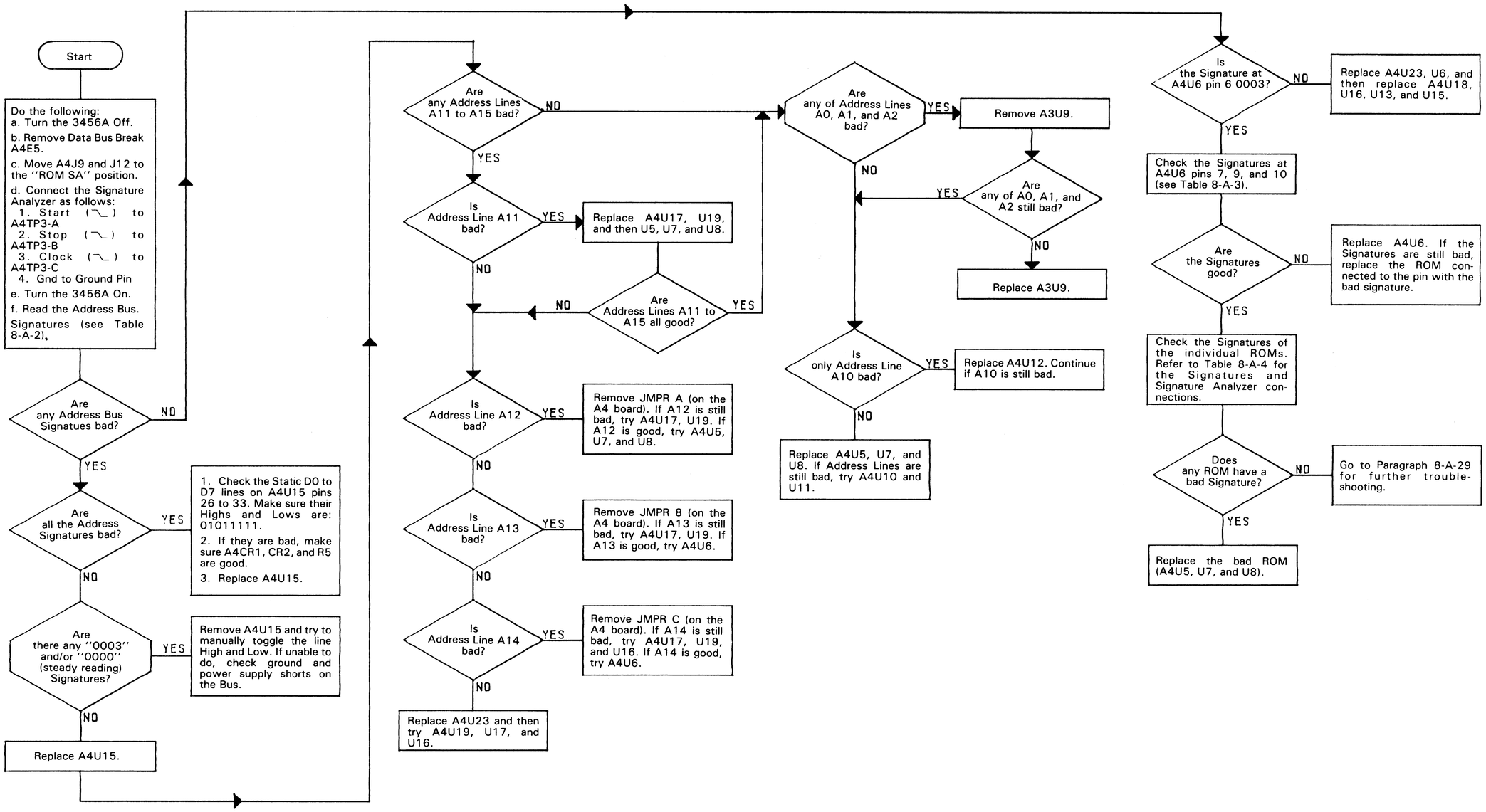

Figure 8-A-1. Flowchart A.

Table 8-A-5. Strobe Signatures.

I.C.	Pin #	Signature
A4U17	11	4545
	12	CF2C
	15	U446
A4U19	7	9F4U
	9	91PC
	12	9H70
	13	CA8P
	15	1025

Note. Set the Signature Analyzer to:

Start: (¬_) A4TP2-D
Stop: (¬_) A4TP2-A
Clock: (¬_) A4TP3-C

The "1" (High, +5V) signature is: 1025.

Table 8-A-6. Ram Select Signatures.

I.C.	Pin #	Signature
A4U3	1	66HH
	2	UUH8
	3	H0A4
A4U9	1	UUH8
	2	FHPC
	3	2213
	4	1020
	5	66HH
	6	54PP
	10	2213
	11	1020
	12	1020
	13	2213
A4U12	1	FHPC
	2	2213
	3	5PCH
	4	FHPC
	5	1020
	6	9356
	8	2213
	9,10	1020
	11	1020
	12,13	2213

Note. Set the Signature Analyzer to:

Start: (¬_) A4TP2-A
Stop: (¬_) A4TP2-B
Clock: (¬_) A4TP3-C

The "1" (High, +5V) signature is: 3233.

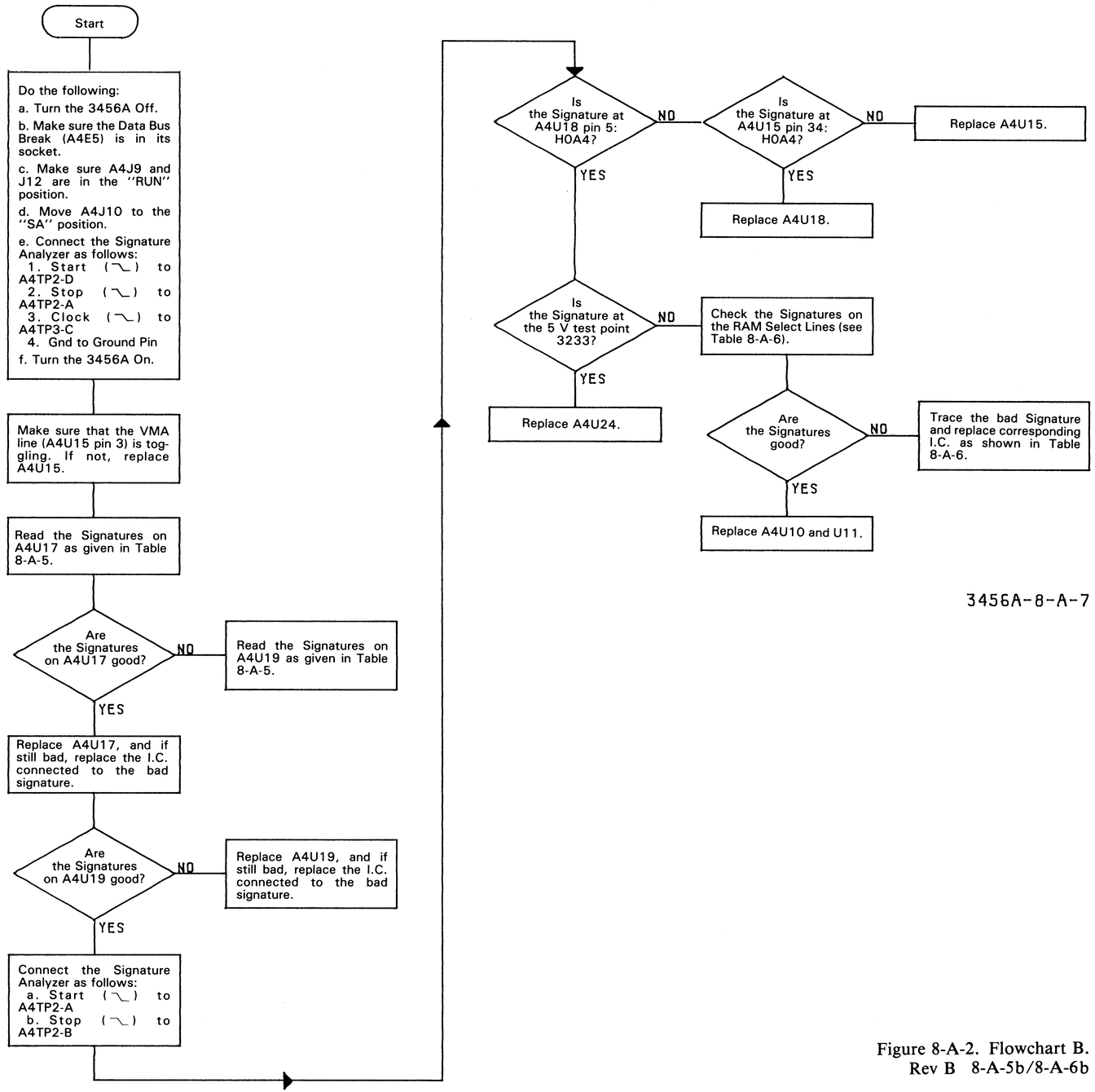

Figure 8-A-2. Flowchart B.

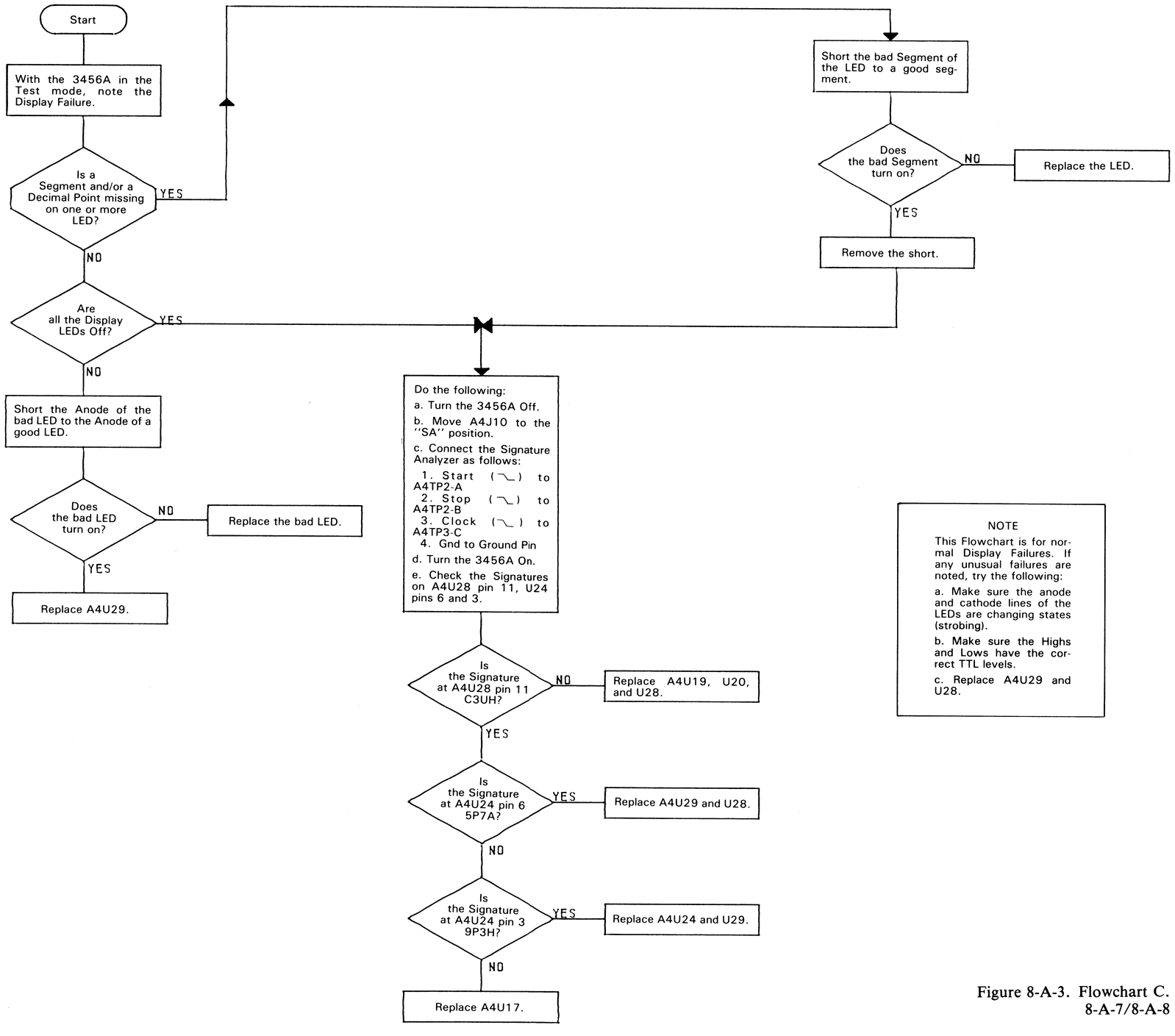

NOTE

This Flowchart is for normal Display Failures. If any unusual failures are noted, try the following:

a. Make sure the anode and cathode lines of the LEDs are changing states (strobing).

b. Make sure the Highs and Lows have the correct TTL levels.

c. Replace A4U29 and U28.

Figure 8-A-3. Flowchart C.

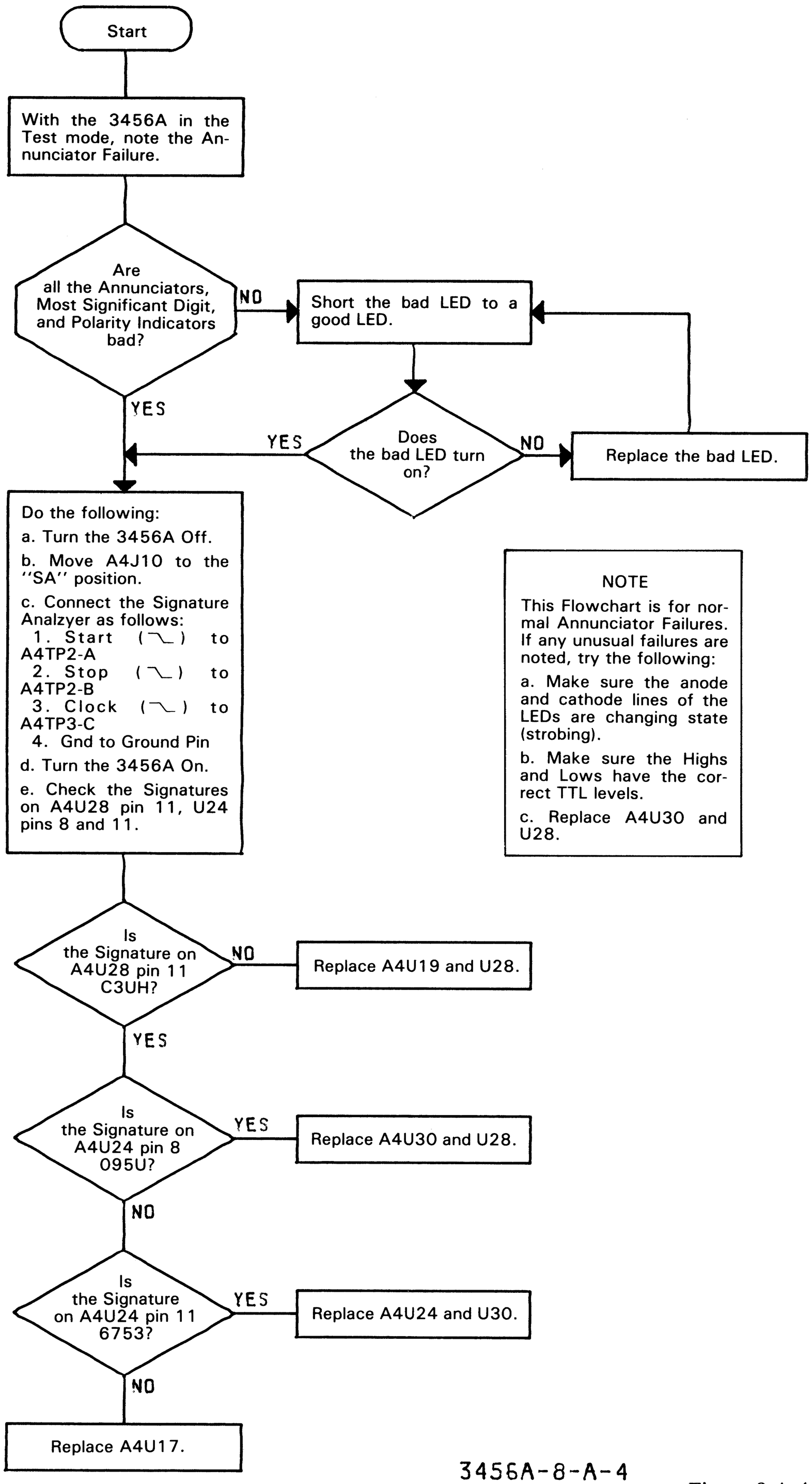

Figure 8-A-4. Flowchart D.

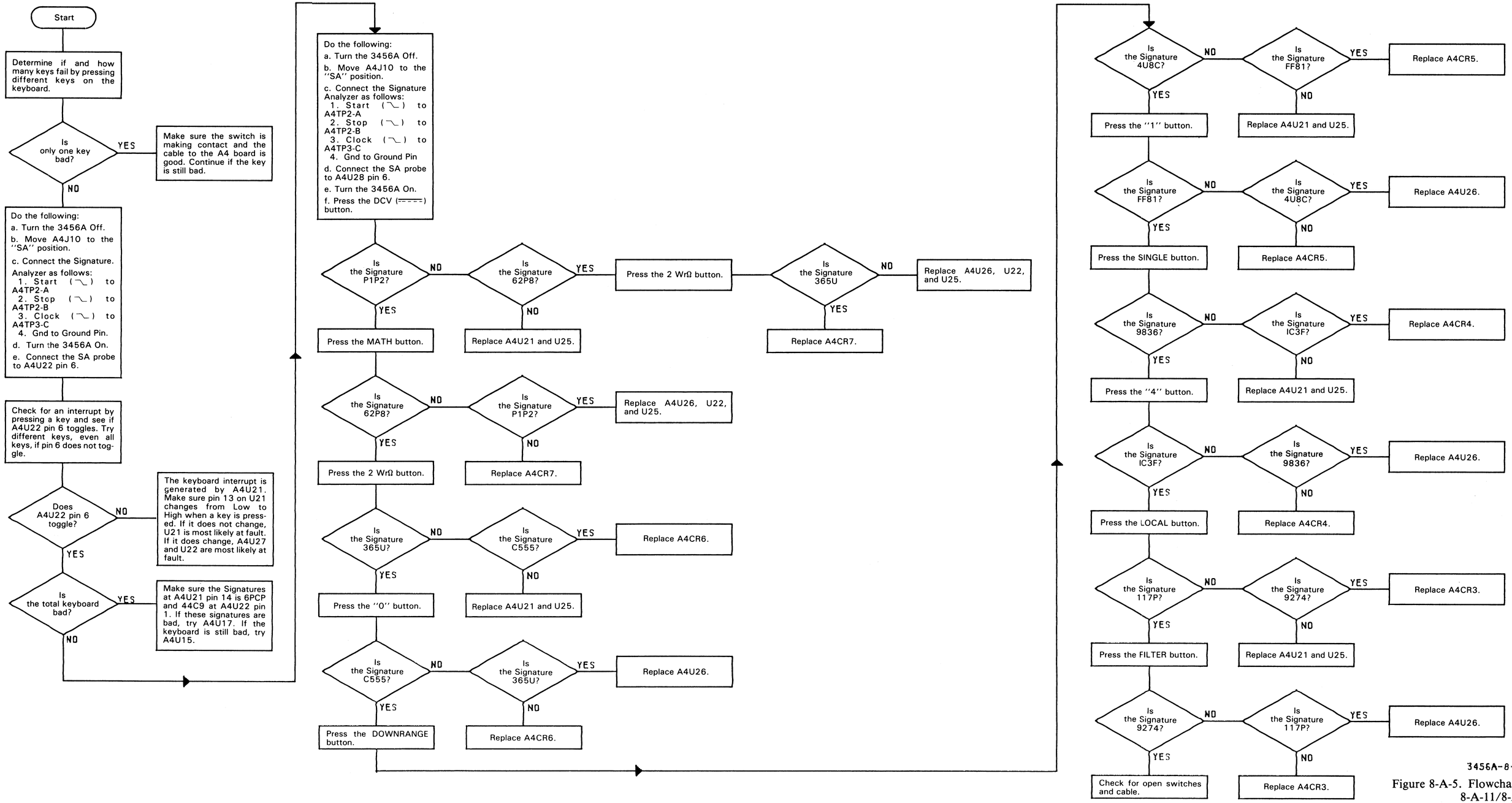

Figure 8-A-5. Flowchart E.

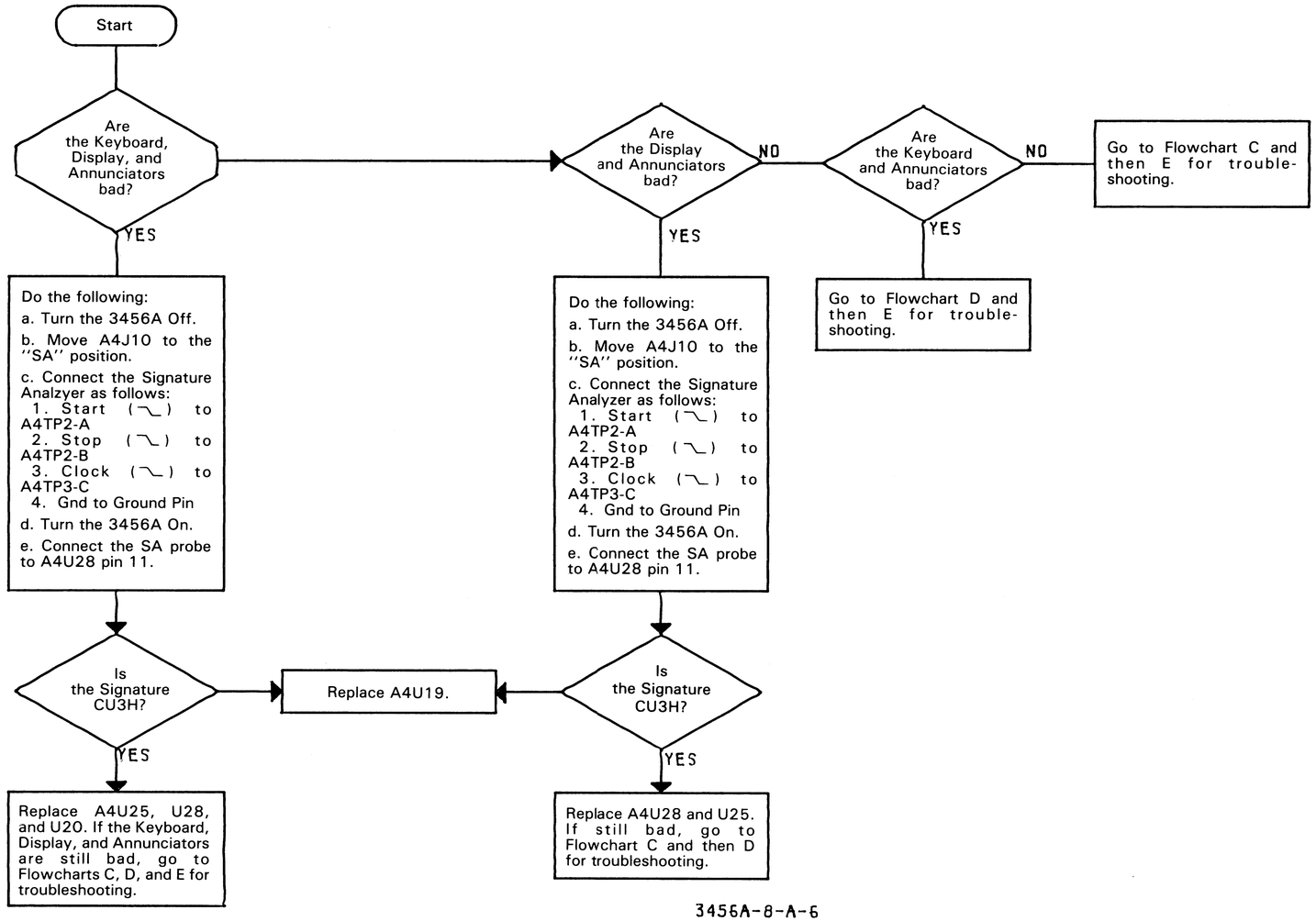

Figure 8-A-6. Flowchart F.

8-A-15. To determine what and if the display fails, set the 3456A to the Test mode by pressing the TEST button. When the button is pressed, the Annunciators, most significant digit, polarity indicators, and display should alternately turn on and off. (If the Annunciators and the Display are locked-up, troubleshoot for a Turn-On Failure [see Paragraph 8-A-6].) For an Inoperative Display, go to Flowchart C, Figure 8-A-3, for troubleshooting.

8-A-16. Inoperative Annunciator.

8-A-17. The Annunciators, most significant digit, first decimal point, and polarity indicators are controlled by A4U30 and are thereby considered part of the Annunciators. An annunciator failure is when:

a. All or some of the Annunciators are always on.

b. All or some of the Annunciators do not turn on.

8-A-18. To determine what and if the annunciators fail, set the 3456A to the Test mode by pressing the TEST button. When the button is pressed, the Display and Annunciators should alternately turn on and off. (If the Display and Annunciators are locked-up, troubleshoot for a Turn-On Failure [see Paragraph 8-A-6].) For Inoperative Annunciators, go to Flowchart D, Figure 8-A-4, for troubleshooting.

8-A-19. Inoperative Keyboard.

8-A-20. An Inoperative Keyboard is when certain or all 3456A operations cannot be selected from the front panel. This is also true when a certain button is pressed and the front panel indicates a different operation (example: with the DCV button pressed, the 3456A goes to the Ohms Function). If the Display and/or Annunciators also show a malfunction, go to Paragraph 8-A-21 for troubleshooting. For an Inoperative Keyboard, go to Flowchart E, Figure 8-A-5, for troubleshooting.

8-A-21. Combined Display, Annunciator, and Keyboard Failure.

8-A-22. A Combined Display, Annunciator and Keyboard Failure is when:

a. The Display and Annunciators are Inoperative.

b. The Display and Keyboard are Inoperative.

c. The Annunciators and Keyboard are Inoperative.

d. The Display, Annunciator, and Keyboard are Inoperative.

8-A-23. If any of the previous symptoms are observed, do the following:

a. Turn the 3456A Off.

b. Remove the Data Lines Break A4E5 from its socket.

c. Move A4J9 and A4J12 to their respective "ROM SA" position.

d. Connect and set the Signature Analyzer as follows:

Start:	A4TP3-A	(¬_)
Stop:	A4TP3-B	(¬_)
Clock:	A4TP3-C	(¬_)
Hold:		Out
Self-Test:		Out
Gnd:	Ground Pin (next to A4C11)	

e. Turn the 3456A On and read the Data Line Signatures as given in Table 8-A-1.

8-A-24. If the Data Line Signatures are bad, go to Flowchart A, Figure 8-A-1, for troubleshooting. If the Data Lines are good, go to Flowchart F, Figure 8-A-6.

8-A-25. HP-IB Failure.

8-A-26. Before troubleshooting an HP-IB Failure, make sure the 3456A is working correctly using the front panel. Repair the front panel operation before troubleshooting for an HP-IB failure. Do the following for an HP-IB Failure:

a. Turn the 3456A Off and remove any connection from the 3456A's rear HP-IB Connector.

b. Remove the Data Lines Break A4E5 from its socket.

c. Move A4J9 and A4J12 to their respective "ROM SA" position.

d. Connect and set the Signature Analyzer as follows:

Start:	A4TP3-A	(¬_)
Stop:	A4TP3-B	(¬_)
Clock:	A4TP3-C	(¬_)
Hold:		Out
Self-Test:		Out
Gnd:	Ground Pin (next to A4C11)	

e. Turn the 3456A On and read the Data Line Signatures as shown in Table 8-A-1. If the Signatures are bad, go to Flowchart A, Figure 8-A-1, for troubleshooting.

f. Turn the 3456A Off and remove the HP-IB Interface Chip (A3U9) from its socket. Install the HP-IB SA Module II (-hp- Part No. 5061-1154) in its place.

g. Connect and set the Signature Analyzer as follows:

Start:	A4U6 pin 10	(¬_)
Stop:	A4U6 pin 10	(_¬)
Clock:	A4TP3-C	(¬_)
Hold:		Out
Self-Test:		Out
Gnd:	Ground Pin (next to A4C11)	

h. Turn the 3456A On and check the following signatures. If any signatures are bad, try the recom-

mended integrated circuit(s) in the given order. Replace the one on the left first and then replace the one next to it, if the signature was still bad.

NOTE

Refer to Section VII (Backdating) of this manual for the signatures in steps h, j, m, and o, if the 3456A is equipped with ROMs having part numbers 1818-1367, 1818-1368, and 1818-1369 for A4U5, A4U7, and A4U8, respectively. ROMs with these numbers may be installed for instruments with serial numbers 2015A-03070 and below.

I.C.	Pin #	Signature	Replace
A3U4	11	1180	A3U4
A3U4	10	0000	A3U4,U8
A3U4	12	1180	A3U12,U7,U8,U4
A3U14	15	1180	A3U14
A3U12	3	892F	A3U12
A3U12	5	P263	A3U12
A3U12	11	1302	A3U12
A3U12	14	8547	A3U12,U14
A3U12	13	8547	A3U12
A3U7	3	C01A	A3U7
A3U7	5	C532	A3U7
A3U7	11	HA6P	A3U7
A3U7	14	2A22	A3U7,U8
A3U7	13	2A22	A3U7
A3U8	3	2A22	A3U8
A3U14	13	8547	A3U14

i. Plug the HP-IB SA Module I (-hp- Part No. 5061-1153) into the 3456A's rear HP-IB Connector. Do not remove Module II.

j. Check the following signatures and if any are bad, replace the recommended Integrated Circuit in the given order:

I.C.	Pin #	Signature	Replace
A3U8	5	FF8A	A3U8,U14
A3U8	11	421U	A3U8,U14
A3U8	13	3501	A3U8,U14
A3U8	6	FF8A	A3U8
A3U8	10	421U	A3U8
A3U8	14	3501	A3U8
A3U14	2	FF8A	A3U14
A3U14	6	421U	A3U14
A3U14	10	3501	A3U14

k. Turn the 3456A Off and remove both HP-IB SA Module I and II.

l. Insert the HP-IB SA Module III (-hp- Part No. 5061-1155) into the socket of A3U9 and turn the 3456A On.

m. Check the following signatures and if any are bad, replace the recommended Integrated Circuit in the given order:

I.C.	Pin #	Signature	Replace
A3U4	10	1180	A3U4,U8
A3U4	12	0000	A3U12,U7,U8,U4
A3U8	15	1180	A3U8
A3U8	5	892F	A3U8
A3U8	11	P263	A3U8
A3U8	13	1302	A3U8
A3U14	13	8547	A3U14

n. Plug the HP-IB SA Module I (-hp- Part No. 5061-1153) into the 3456A's rear HP-IB Connector. Do not remove Module III.

o. Check the following signatures and if any are bad, replace the recommended Integrated Circuit in the give order:

I.C.	Pin #	Signature	Replace
A3U12	3	892F	A3U12,U7
A3U12	5	P263	A3U12,U7
A3U12	11	1302	A3U12,U7
A3U12	13	8547	A3U12,U7,U8
A3U12	2	892F	A3U12
A3U12	6	P263	A3U12
A3U12	10	1302	A3U12
A3U12	14	8547	A3U12
A3U7	2	892F	A3U7
A3U7	6	P263	A3U7
A3U7	10	1302	A3U7
A3U7	14	8547	A3U7
A3U8	2	8547	A3U8

p. Remove Modules I and III. If all the signatures are good, replace A3U9.

8-A-27. MICROPROCESSOR TROUBLESHOOTING.

8-A-28. If the processor is presumed bad, try the following before replacing it:

a. Make sure the PSR (Power Supply Ready) is high. Replace A3U18 if incorrect.

b. Make sure the RST line is high. If the line is low, replace A4U14. If the line is high and U14 is suspected of being bad, temporarily short the processor's pin 40 to ground. When the short is removed, the pin should go high and turn on the processor. Replace U14 if it happens.

c. Make sure the NMI line (A4U15 pin 6) is high. This line can be held low by the HP-IB chip (A3U9). Remove A3U9 and try again.

d. Make sure the IRQ line (A4U15 pin 4) is not held low. A low line shows up as a Display failure.

8-A-29. DATA BUS LINES TROUBLESHOOTING.

8-A-30. Bad signatures on Data Lines D0 to D7 with Address Lines A0 to A15 good, can be caused by many different circuits. To help isolate the circuits, the

3456A's Outguard can be half-split. This can be done by replacing the A3 board with a good one. If the Data Lines are good, the A3 board is bad. If the Data Lines are still bad, the A4 board is bad.

8-A-31. If a good A3 board is not available, do the following:

a. Turn the 3456A Off.

b. Remove the A4 board and isolate it from the chassis.

c. Connect pin 1 of P6 to the A4 board's 5V test point.

d. Connect pin 3 of P6 to the A4 board's GND test point.

e. Connect pin 10 of P6 to pin 10 of A4J5.

f. Turn the 3456A On.

CAUTION

Make sure the A4 does not touch any of the 3456A's chassis or components while the instrument is turned on, or damage to the board may result.

Make sure the 3456A is turned Off when removing or replacing a printed circuit board, or damage may result to the instrument and board.

8-A-32. If the Data Line signatures are now good, the A3 board is bad. If the signatures are still bad, the A4 board is at fault.

8-A-33. Once it has been determined which board is at fault, determine which Integrated Circuit on the Data Bus is causing the bad signature. Most of the Integrated Circuits on the Data Bus, except for the ROMs, can be removed without affecting SA. Some possibilities are:

a. A4 Board: Try replacing the RAMS, A4U8, U12 and associated circuits. Next try the Display Latch, A4U28, and Keyboard Buffer, A4U25. Other possibilities are the ROMs, A4U5, U7, and U8.

b. A3 Board: Remove the HP-IB chip A3U9. If that does not help, try Address Buffer A3U16, and Isolation Logic Transmitter and Receiver Registers A3U10, U20.

8-A-34. OUTGUARD ISOLATION LOGIC.

8-A-35. General.

8-A-36. The Outguard Isolation Logic can be defective if only dashes (- - - - -) are displayed. Since this is also true if the 3456A has an Inguard Failure, determine the failure by doing the following:

a. With the 3456A turned On, press the TEST button.

b. If Test #3 fails (−3.00000 displayed), the 3456A has an Isolation Logic Failure. Continue with Step d.

c. If "+1.8.8.8.8.8.+8." is constantly displayed (Test #3 does not fail), the Byte Available Line (A3U17, pin 9) may be held High or Low. Make sure the line and pin 10 of U13 toggles. If pin 10 of U13 is toggline and the Byte Available line is not, replace U17. If pin 10 of U13 is not toggling, replace U13.

d. Turn the 3456A Off.

e. Unplug the cable from the Isolation Logic Connector (A3J7).

f. Connect pin 1 to 2 and 3 to 4 on the Isolation Logic Connector. If the Isolation Logic Test Jumper, -hp-Part No. 03456-61602 is available, plug it into J7 instead of shorting the pins.

g. Turn the 3456A On.

h. Press the TEST button and then set the 3456A to Test #3 by pressing the 3, STORE, and 5 (COUNT) keys.

i. If Test #3 still fails, the Outguard Isolation Logic is at fault. Go to the next paragraph. If the test passes (+3.00000 displayed), the Inguard Isolation Logic is at fault. Go to Service Group B for troubleshooting.

8-A-37. Isolating the Transmitter from the Receiver.

8-A-38. The Isolation Logic Failure can be either in the Transmitter or Receiver Circuitry. To determine which circuit is at fault do this:

a. Make sure the 3456A is still set-up for Test #3 and the Isolation Logic Connector's pins are shorted.

b. Connect the vertical input of an oscilloscope to the core of transformer A3T1. Using the scope set-up information in Figure 8-A-7A, check for the waveform shown in the figure.

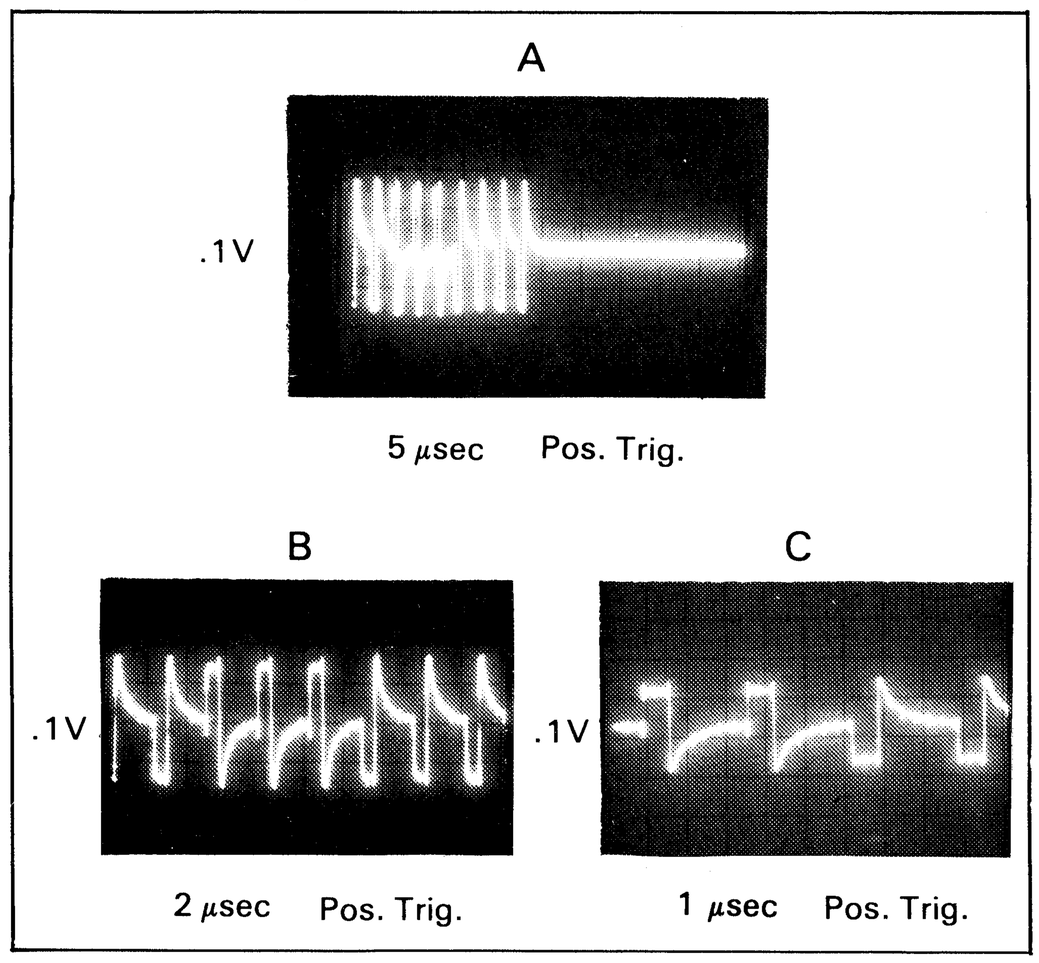

Figure 8-A-7. Transmitter Output.

c. If the waveform is missing or different from the one in the figure, the Transmitter is at fault. Go to Paragraph 8-A-39 for troubleshooting. If the waveform is good, the Receiver is at fault. Go to Paragraph 8-A-45 for troubleshooting.

NOTE

Unless otherwise noted, troubleshoot the Transmitter and Receiver Circuitry with the 3456A in Test #3 and the Isolation Logic Connector's pins shorted.

8-A-39. Transmitter Troubleshooting.

8-A-40. Since the waveform at the core of T1 is used to determine the Transmitter Failure, it is important to know how the normal waveform should look. Refer to Figure 8-A-7A. Note that the waveform has a total of 9 pulses. The first 2 pulses indicates a High condition, the next 3 a Low, and the last 4 a High. The shape of the pulses is also important. Use the expanded view of the waveform to determine the correct shape. An expanded view is in Figure 8-A-7B and C. The drawing on Schematic 12 may also be helpful. Once it has ben determined how the waveform should look, Transmitter Failures can be categorized as follows:

a. No Waveform at all.

b. Incorrect Number of Pulses on the Waveform. This can show up in two major ways, either all the high or low pulses are missing, or there are more or less than 9 pulses.

c. Incorrect Combination of Pulses. This is when the high and low pulses are not in the correct order. For example, the waveform may show 3 highs, 1 low, and 5 highs. The correct order is 2 highs, 3 lows, and 4 highs.

d. Incorrect Waveform. This is when the shape of the pulses and waveform is different. An example is when two or more pulses are overlapping with each other. Since this may appear as having less than 9 pulses, carefully look at the waveform. With the incorrect number of pulses, the pulses should still look normal. With the incorrect waveform, the pulses are not normal.

8-A-41. No Waveform at all. Since this failure can be caused by a variety of components in the Transmitter, use the following Signal Tracing Technique:

a. Use an oscilloscope to check for the waveforms shown in Figure 8-A-8A and B at pin 8 and 3 of U19. If the waveforms are good, replace T1.

b. Check for the waveforms shown in Figure 8-A-9A, B, and C at U19 pin 1, 2, and 10, respectively. If the waveforms are good, replace U19.

c. If the waveform at pin 1 of U19 is missing, troubleshoot the clock signal by doing the following:

1. Use a logic probe and make sure pin 2 of U13 is toggling. If not, then trace for the clock signal through U2b and c, U6b and c, and U11b. Replace the IC(s) connected to the line that is not toggling.
2. Check for toggling on pin 3 of U13. If it is toggling, relace U13.
3. If pin 3 of U13 is not toggling, U17a, U15b, U2a, and U13b may be defective. First, make sure pin 4 of U13 is not being held low. Troubleshoot for a bad U13b, U6d, and U3a if pin 4 is low. If pin 4 is not low, make sure pin 9 of U15b toggles. If it is toggling, replace U17. If not, make sure pin 12 of U15 toggles. If it is, replace U15. If not, try U2.
4. Check the Isolation Logic Strobe by turning the 3456A Off, moving A4J10 to the "SA" position, and connecting the Signature Analyzer as follows:

Start:	A4TP2-D	(¬_)
Stop:	A4TP2-A	(¬_)
Clock:	A4TP3-C	(¬_)
Hold:		Out
Self-Test:		Out
Gnd:	Ground Pin (next to A4C11)	

5. Next turn the 3456A On and check for signature "1025" (high) at pin 14 of A4U19 and signature "CU45" at pin 5 of U18. If the signatures are good, continue troubleshooting the Isolation Logic. If the signatures are bad, try U19 and U18, respectively. If the signatures are still bad, go to Flowchart B, Figure 8-A-2, for further troubleshooting.

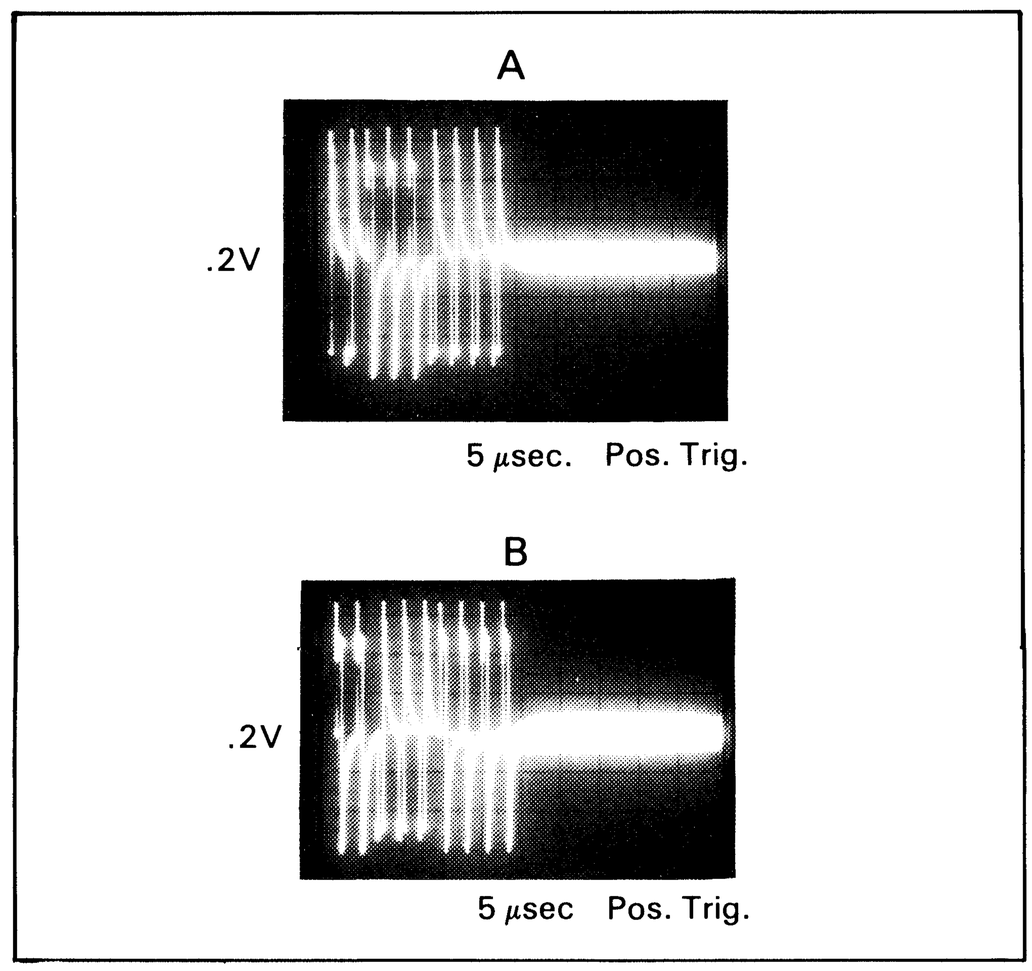

Figure 8-A-8. Output of U19.

d. If the waveform at pins 2 and 10 of U19 is missing, but pin 1 of U19 is good, make sure pin 4 of U15 toggles. If not, try U6. If pin 4 of U15 is toggling, check for toggling on pin 2 of U15. If pin 2 is toggling, replace U15. If not, try U10.

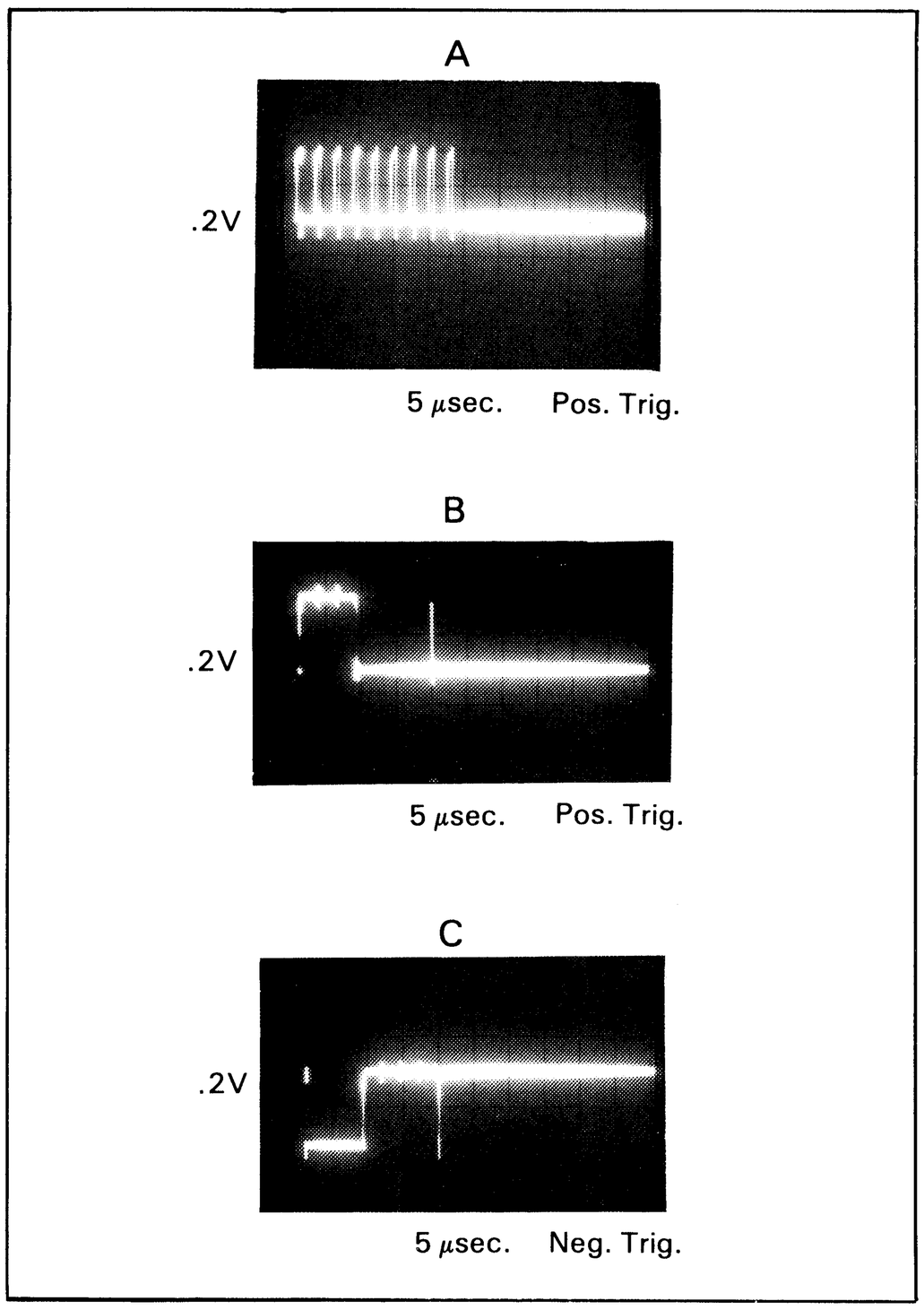

Figure 8-A-9. Input to U19.

8-A-42. Incorrect Number of Pulses on the Waveform. With an oscilloscope, observe the waveform at the core of T1.

a. If all the Low Pulses are missing, check the waveform shown in Figure 8-A-9B at pin 2 of U19. If the waveform is good, replace U19. If not, replace U15 or U19.

b. If all the High Pulses are missing, check the waveform shown in Figure 8-A-9C at pin 10 of U19. If the waveform is good, replace U19. If bad, replace U15 or U19.

c. If more than 9 pulses are on the waveform at the core of T1, use a logic probe and make sure that pin 2 of U6 toggles. If pin 2 toggles, replace U1. If not, replace U6.

d. If fewer than 9 pulses are on the waveform at the core of T1, replace U1. (Note: Make sure the failure in Step a and b is not present, before replacing U1.)

8-A-43. Incorrect Combination of Pulses. With a logic probe, check for toggling at pin 2 of U6. If pin 2 is not toggling, replace U6. If the pin toggles, replace U10.

8-A-44. Incorrect Waveform. This may be because of incorrect timing caused by U6b and c, U2b and c, and U17a. Check for Input/Output shorts on U2 and U6. If a short is noted, replace the defective IC. If no shorts are noted, replace U17.

NOTE

Make sure the failure is not an Incorrect Number of Pulses, before troubleshooting for an Incorrect Waveform.

8-A-45. Receiver Troubleshooting.

8-A-46. Troubleshooting the Receiver can be done by using the following Signal Tracing Technique:

a. With an oscilloscope, check for the waveform shown in Figure 8-A-10 at the core of A3T2. If the waveform is not present, replace T2.

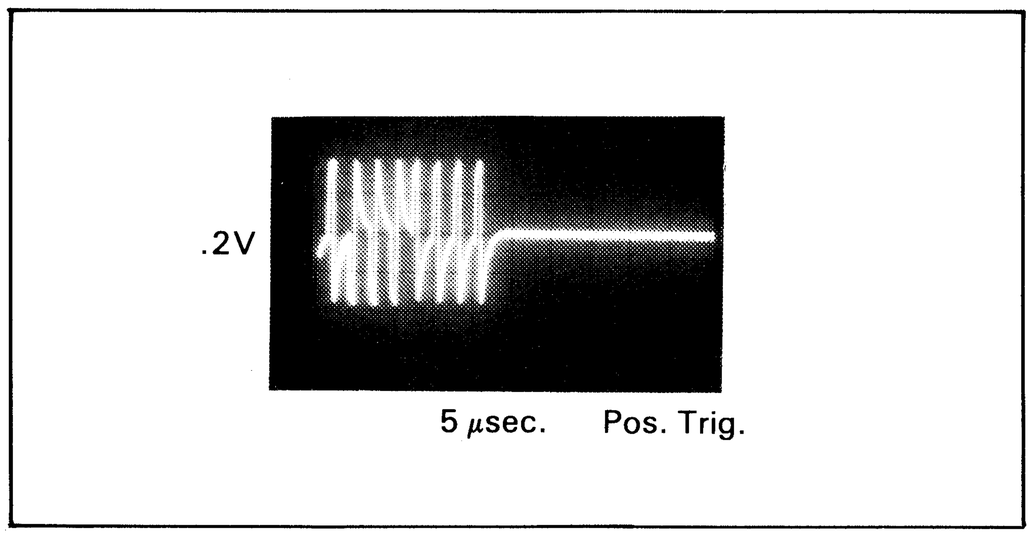

Figure 8-A-10. Receiver Inputs.

b. Measure for the waveform shown in Figure 8-A-11A at the junction of R17 and R21 (Figure 8-A-11B shows the expanded waveform). If the waveform is not present, replace T2.

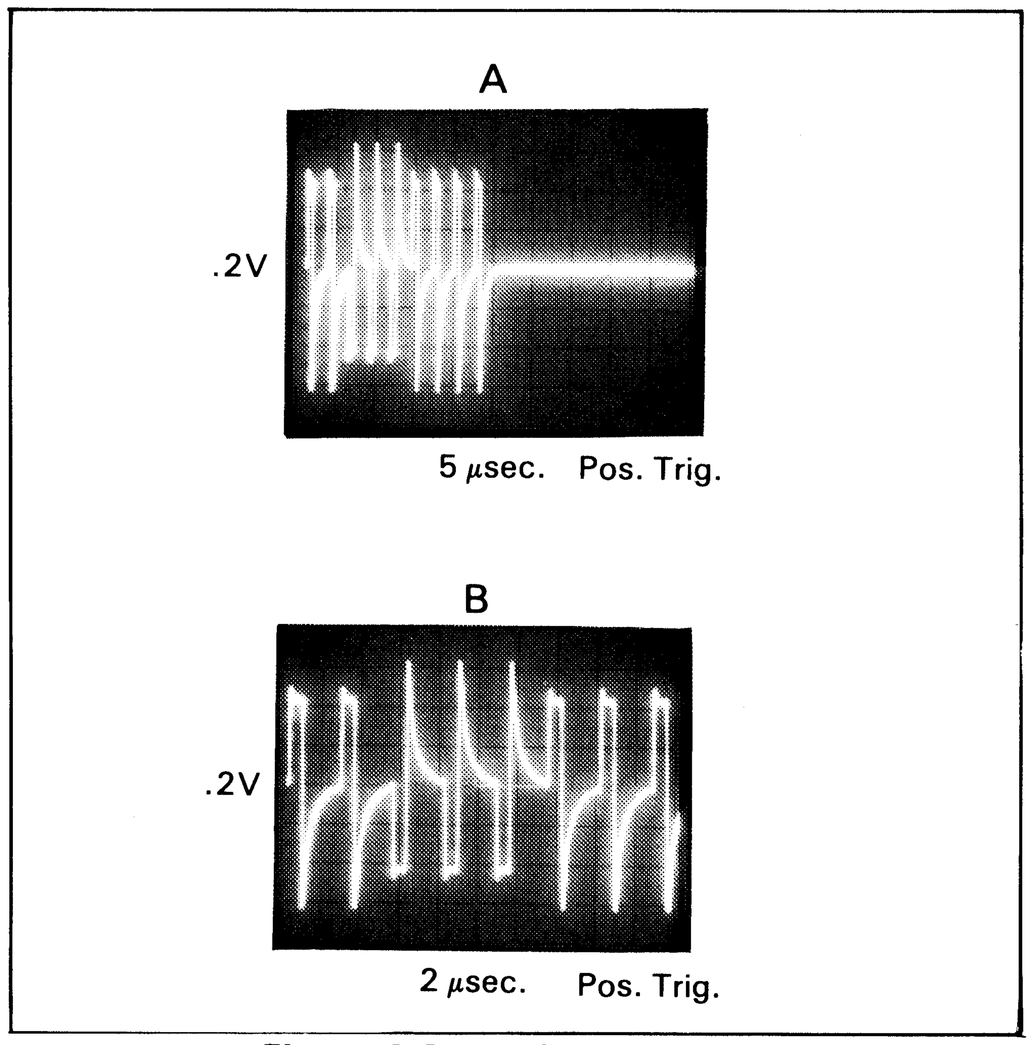

Figure 8-A-11. Output of T2.

c. Measure for the waveform shown in Figure 8-A-12A at pin 6 of U21. (Figure 8-A-12B shows the ex-

panded waveform.) If the waveform is not present, replace U21.

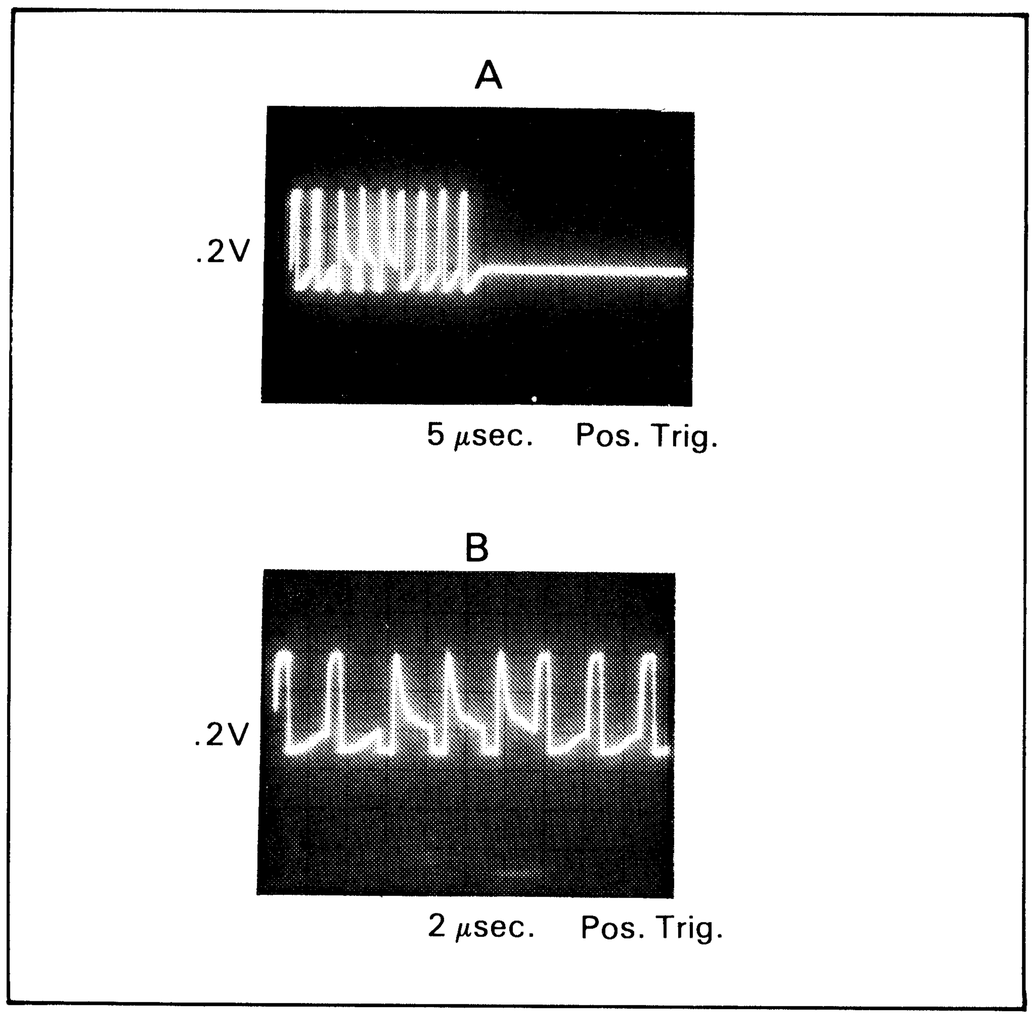

Figure 8-A-12. Receiver Data.

d. Measure for the waveform shown in Figure 8-A-13 at pin 14 of U21. If the waveform is not present, replace U21. If the waveform is present, make sure the same waveform is at pin 8 of U22. If the waveform is not at pin 8, try U2 and/or U6.

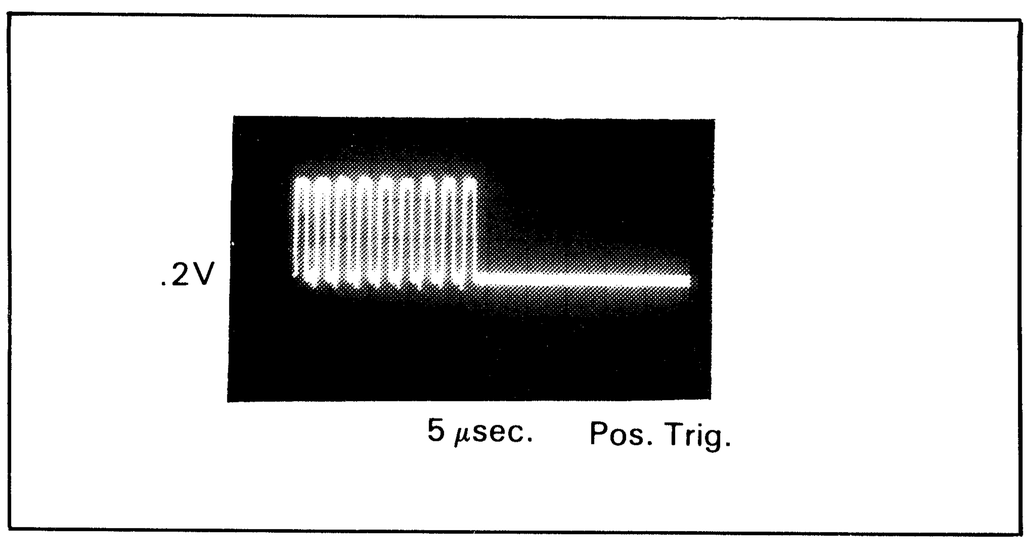

Figure 8-A-13. Figure Receive Clock.

e. Use a logic probe and make sure pin 9 of U22 toggles. If pin 9 toggles, continue with the next step. If pin 9 does not toggle, make sure pin 13 of U13 toggles. If pin 13 does not toggle, replace U13. If pin 14 toggles, replace U11.

f. Make sure pin 1 of U20 toggles. If not, replace U6.

g. Connect channel A of a dual trace oscilloscope to pin 3 of U22 and channel B to pin 1 of U20 (use the scope set-up information in Figure 8-A-14). Make sure the measured waveforms are as shown in Figure 8-A-14. Also make sure pin 4, 5, 6, and 13 are the same as pin 3. If any waveforms are bad, replace U22.

h. Using the same set-up as in Step g (previous step), connect channel A of the oscilloscope to pin 10 of U22. Make sure the measured waveforms are as shown in Figure 8-A-15. Also make sure pin 11 and 12 are the same as pin 10. If any waveforms are bad, replace U22.

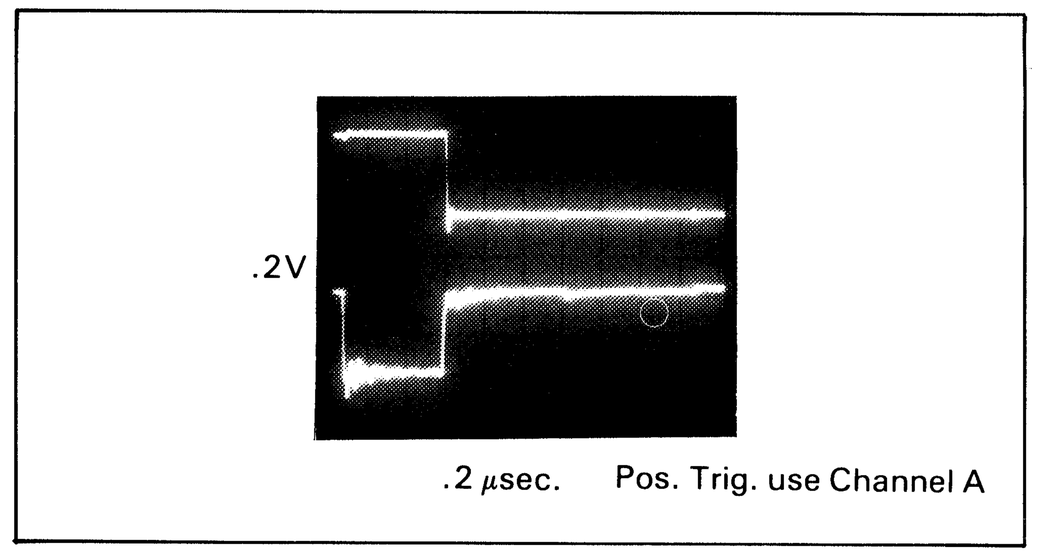

Figure 8-A-14. High Level Data.

i. If all of the waveforms in Step g and h are good, replace U20.

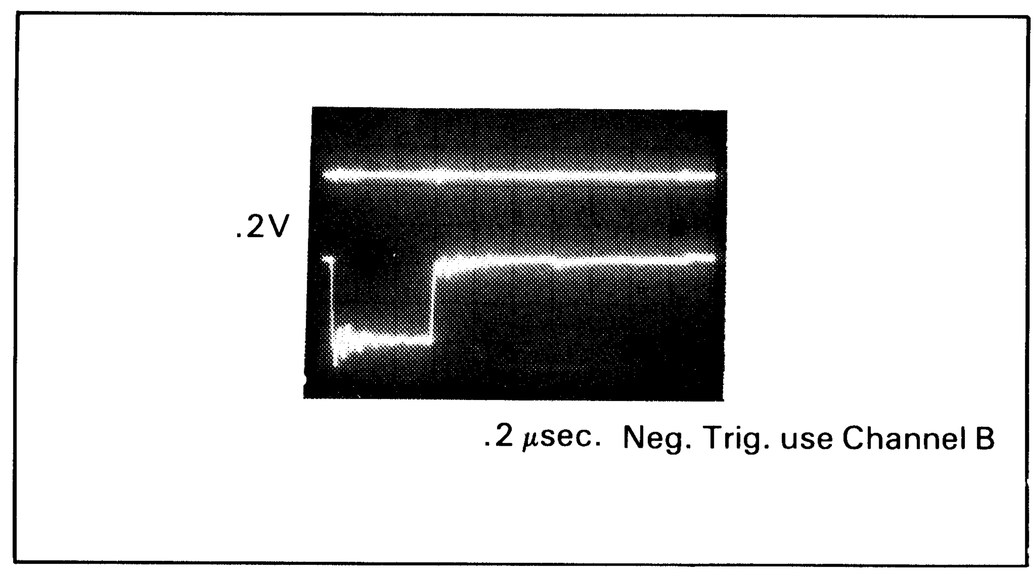

Figure 8-A-15. Low Level Data.

8-A-47. MISCELLANEOUS FAILURES.

8-A-48. External Trigger Inoperative.

8-A-49. Make sure pin 5 of A3U5 changes from low to high to low, when the 3456A is externally triggered. If it does not, make sure diodes CR3 and CR4, resistors R2 and R3, and U4 are good. If still bad, replace A4U19. If pin 5 of A3U5 does change, replace A3U16.

8-A-50. Voltmeter Complete Inoperative.

8-A-51. Make sure diodes A3CR1 and CR2 are not shorted. Try A4U19.

8-A-52. HP-IB Address Selection Inoperative.

8-A-53. Make sure the 3456A HP-IB is otherwise working correctly. If not, go to Paragraph 8-A-25 for troubleshooting. If it is good, try A3U16.

SERVICE GROUP B

Service Group B Contents

Title	Paragraph
General	8-B-1
Inguard (Logic and A/D) Failure Symptoms	8-B-4
The 3456A Displays Dashes (- - - - -)	8-B-6
Overload Failure or Constant Zero Displayed (also if Test #4 or Test #7 fails)	8-B-8
Inaccurate or Noisy Readings	8-B-10
Range Failure	8-B-12
Normal Mode Rejection	8-B-14
Isolating the Inguard Logic from the A/D Circuitry	8-B-16
A/D Troubleshooting	8-B-18
Overload Failure	8-B-20
Constant Zero Reading	8-B-22
Inaccuracy or Noise	8-B-24
A/D Digital Circuitry Troubleshooting	8-B-27
Inguard Logic Troubleshooting	8-B-32
Pre-Troubleshooting Information	8-B-35
Range and Inguard Logic Failure	8-B-37
Isolation Logic Troubleshooting	8-B-39

SERVICE GROUP B

8-B-1. GENERAL.

8-B-2. This Service Group has troubleshooting information for the 3456A's Inguard Logic (including the Inguard Isolation Logic) and A/D circuitry. Make sure the 3456A's Outguard Logic is good before troubleshooting for any Inguard Failures. Go to Service Group A for the Outguard's Failures and Troubleshooting.

8-B-3. The Service Group is symptoms oriented (what fails) with different levels of troubleshooting. The first level determines the faulty area and the other levels has troubleshooting information for the areas.

8-B-4. INGUARD (LOGIC AND A/D) FAILURE SYMPTOMS.

8-B-5. An Inguard Failure can be determined by the following symptoms.

8-B-6. The 3456A Displays Dashes (- - - - - -).

8-B-7. This symptom occurs when the 3456A's Outguard Isolation Logic, Inguard Isolation Logic, or the Inguard (Analog or Digital) fails. To help determine the faulty circuitry, press the front panel TEST button and check for the following:

a. Test #3 fails. This test shows an Isolation Logic Failure in either the Inguard or Outguard. To determine the faulty circuitry, do the following:

1. Turn the 3456A Off.
2. Unplug the cable from the Isolation Logic Connector (A3J7, Schematic 12).
3. Connect pin 1 to 2 and pin 3 to 4 on the Isolation Logic Connector. If the Isolation Logic Test Jumper, -hp- Part No. 03456-61602 is available, plug it into J7 instead of shorting the pins.
4. Turn the 3456A On.
5. Press the TEST button and then set the 3456A to Test #3 by pressing the 3, STORE, and 5 (COUNT) keys.
6. If Test #3 still fails, the Outguard Isolation Logic is at fault. Go to Service Group A, Paragraph 8-A-37 for troubleshooting. If the Test passes, go to Paragraph 8-B-32 for troubleshooting.

b. Test #4 or Test #7 fails. If any of these tests fail, the failure can be in the A/D Converter or the Analog Circuitry (Input Switching or Input Amplifier). This failure can also show up as an Overload. Go to Paragraph 8-B-8 to determine the faulty circuitry.

8-B-8. Overload Failure or Constant Zero Displayed (also if Test #4 or Test #7 fails).

8-B-9. If an Overload Failure is noted, a Constant Zero is displayed, or Test #4 or Test #7 fails, the failure can be in the A/D Converter, Inguard Logic, Input Amplifier, or Input Switching. To determine the faulty circuitry, do the following:

a. Determine the type of failure.

b. If an Overload Failure is noted, do the following:

1. Turn the 3456A Off.
2. Move A30J35 to the Non-Run (2 and 3) position (Schematic 8).
3. Turn the 3456A On.
4. If the Overload disappears and the instrument is working correctly, the Overload Circuitry in the A/D Converter is at fault. Check for a shorted A20C410. Replace C410, if shorted. If the capacitor is good, replace U409.
5. If the Overload remains, return J35 to the Run position and continue with the next step.

c. If Test #4 or Test #7 fails (or an Overload is still noted), do the following:

1. Press the 3456A's RESET button.
2. Set the instrument to the 10 V range and the 6 Digit Mode (by storing 6 into the N DIGIT DISP Register).
3. Place jumper A20J29 in the GND test position, as shown in Figure 8-B-1 (Schematic 4).

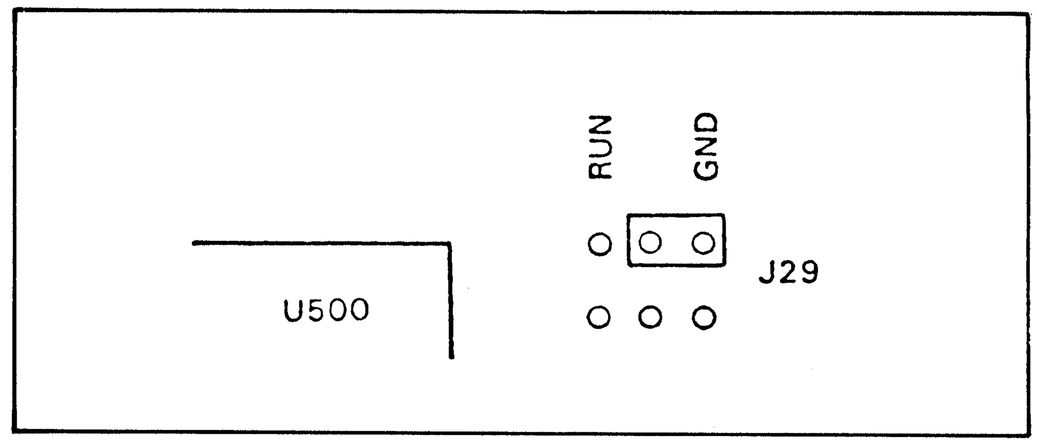

Figure 8-B-1. Test Jumper A20J29 in Ground Position.

4. Turn Autozero Off. The 3456A should display a stable zero reading (±3 count).
5. If other than zero is displayed, the A/D Converter or Inguard Logic is at fault. Go to Paragraph 8-B-16 for further isolation.
6. If a stable zero is displayed, continue with Step d.

d. If a Constant Zero is displayed, do the following:

1. Press the 3456A's RESET button.
2. Set the instrument to the 10 V Range and the 6 Digit Mode (by storing 6 into the N DIGIT DISP Register).
3. Make sure jumper A20J29 is in the GND position (as shown in Figure 8-B-1), before doing the next step.
4. Turn Autozero Off.
5. Remove jumper J29 from the GND position and set it aside.

NOTE

Make sure the removed jumper is placed back into the RUN position, when finished with the procedure.

6. Apply an accurate and stable 10 V dc to A20TP401. (Use the Low VOLTS Terminal as the reference point or ground). If an accurate voltage is not available, use one of which the exact value is known.
7. If an overload or zero is displayed, the A/D Converter or Inguard Logic as at fault. Go to Paragraph 8-B-16 for further isolation.
8. If the reading is inaccurate (not within the 3456A's 10 V DCV specifications), the A/D Converter is at fault. Go to Paragraph 8-B-18 for troubleshooting.
9. If the 10 V reading is good, the Input Switching or Input Amplifier is at fault. Go to Service Group C for troubleshooting.

8-B-10. Inaccurate or Noisy Readings.

8-B-11. Inaccurate or Noisy Readings can be caused by the A/D Converter, Input Amplifier, or Input Switching. These failures can also show up as a noisy reading or an offset with the 3456A's Input Terminals shorted. To determine the faulty circuitry, do the following:

a. Press the 3456A's RESET button.

b. Set the instrument to the 10 V range and the 6 Digit Mode (by storing 6 into the N DIGIT DISP Register).

c. Turn Autozero Off.

d. Place jumper A20J29 in the GND test position, as shown in Figure 8-B-1 (Schematic 4).

e. If the reading on the 3456A's display is other than zero volts (> ±3 counts), the 3456A has an Inaccuracy Failure caused by the A/D Circuitry. Go to Paragraph 8-B-18 for troubleshooting.

f. If the reading is good, remove jumper J29 from the GND position and set it aside.

NOTE

Make sure the removed jumper is placed back into the RUN position, when finished with the procedure.

g. Apply an accurate and stable 10 V dc to A20TP401. (Use the Low VOLTS Terminal as the reference point or ground). If an accurate voltage is not available, use one of which the exact value is known.

h. If the reading is inaccurate or unstable (not within the 3456A's 10V DCV specifications), the A/D Converter is at fault. Go to Paragraph 8-B-18 for troubleshooting.

i. If the 10 V reading is good, the Input Switching or Input Amplifier is at fault. Go to Service Group C for troubleshooting.

8-B-12. Range Failure.

8-B-13. Most Range Failures are caused by the Inguard's Range and Function Control Logic. However, Range Failures can also be caused by the Inguard Logic. This can be determined by checking for the correct output of the Port Expander (A20U702, in the Range and Function Control Logic). The correct outputs in the 3456A's functions and ranges are given in various tables in Service Group C, D, and E. Refer to the Service Groups first, if a range failure is noted. Once it has been determined that the Inguard Logic is at fault, go to Paragraph 8-B-32 for troubleshooting.

8-B-14. Normal Mode Rejection.

8-B-15. This failure can be caused by the ALE Synchronizer Circuitry or Main Clock in the Inguard Logic (Schematic 8). If this failure is suspected, do the following:

a. Make sure the 3456A has the 5.85 MHz crystal for a 60 Hz power source or the 4.875 MHz crystal for a 50 Hz power source (Schematic 8).

b. Make sure the ALE Synchronizer Circuitry is good. Check the circuitry by making sure pins 1 and 2 of A30U5 are toggling (the pins are changing from high to low). If they are not toggling, replace U7 or U8. If they are toggling, replace U5 or U6.

8-B-16. ISOLATING THE INGUARD LOGIC FROM THE A/D CIRCUITRY.

8-B-17. An Overload, Constant Zero, or Test Failure can be caused by the Inguard Logic or A/D Converter. Since the main purpose of the Inguard Logic is to control the A/D Converter, the circuitry should be isolated from each other. Do the following:

a. Turn the 3456A Off.

b. Set the Front/Rear Switch of the instrument to the FRONT position.

c. Unplug the cable from the Isolation Logic Connector (A3J7, Schematic 12).

d. Do the following on the A30 Assembly (Schematic 8).

1. Move A30J33/J34 to the 2" (middle) position, as shown in Figure 8-B-2.

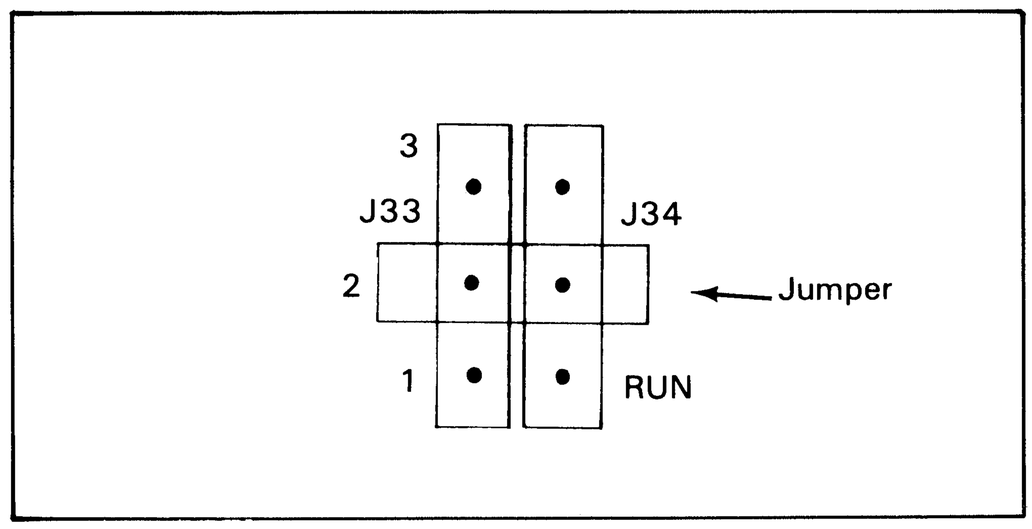

Figure 8-B-2. Jumper A30J33/34 in the 2 Position.

2. Move A30J35 and J36 to the Non-Run (2 and 3) position.

e. Connect (to A30 Assembly) and set the Signature Analyzer as follows (Schematic 8):

Start:	A30J31-STR	(⌄)
Stop:	A30J31-STP	(⌄)
Clock:	A30J32-A	(⌄)
Gnd:	A30J31-GND	
Hold:		Out
Self-Test:		Out

f. Turn the 3456A On and make sure SA is working correctly by checking the +5 V signature (85AA). If the signature is wrong, make sure the SA connections are good. If still wrong, the Inguard Logic is at fault. Go to Paragraph 8-B-32 for troubleshooting. If the signature is correct, continue with the next step.

g. Check the following Signatures in the A/D circuitry (A20 Board, Schematic 4):

Signature	Checked at
9PHA	A20U408 Pin 4
5H70	A20U408 Pin 6
5AF3	A20U408 Pin 8
P012	A20U408 Pin 10

h. Check for a "85AA" signature at A20P30 Pin 5. Make sure the SA probe shows toggling. This is the ALE line which is the clock signal for the A/D Converter.

i. If any of the signatures are wrong, the failure is in the Inguard Logic. Go to Paragraph 8-B-32 for troubleshooting. If the signatures are good, the failure is most likely in the A/D Circuitry. Go to Paragraph 8-B-18 for troubleshooting.

8-B-18. A/D TROUBLESHOOTING.

8-B-19. The A/D Converter in the 3456A can cause Overload, Accuracy, Zero, or Noise Failures. The Converter consists of both analog and digital circuitry. The analog circuitry, consisting of an Integrator, Slope Amp, and Comparator, does the A/D conversion. The digital circuitry controls the operation. Either circuitry can cause the A/D Failures. The following paragraphs have the failures and troubleshooting information.

NOTE

The A/D Converter may have to be repadded according to the A/D Adjustment Procedure in Service Group F, if any components are replaced in the converter.

8-B-20. Overload Failure.

8-B-21. An Overload Failure can be caused by the analog or digital circuitry in the A/D Converter. The Digital Circuitry troubleshooting is in Paragraph 8-B-27. The procedure to isolate the Digital Circuitry from the Analog Circuitry and the analog troubleshooting information, is as follows. Do the following:

a. Make sure the Overload Failure in the 3456A is not caused by the A/D Overload Circuitry. A procedure to isolate the circuitry is in Paragraph 8-B-8, step b. If the procedure in the paragraph has been done, continue with the next step.

b. Turn the 3456A Off.

c. Make sure the Front/Rear Switch of the instrument is in the FRONT position.

d. Make sure the cable from the Isolation Logic Connector (A3J7) is unplugged (Schematic 12).

e. Make sure A30J35 and J36 are in the Non-Run (2 and 3) position (Schematic 8).

f. Make sure A30J33/J34 is in the "1" (Run) position (Schematic 8).

g. Place the A/D Test Jumper A20J29 (Schematic 4) in the GND position, as shown in Figure 8-B-1.

h. Turn the 3456A On.

i. Connect the vertical input of an oscilloscope to A20TP405 (use ground #4 as low). With the scope in the external trigger mode, connect the trigger input to TP404. Using the scope set-up information in Figure 8-B-3, check the waveform shown in the figure (Schematic 4).

j. If the waveform is good, the A/D Digital Circuitry is good. The analog circuitry may be defective. Go to step m.

k. If the waveform is wrong or not present, the A/D Analog or Digital Circuitry is the cause. The faulty area

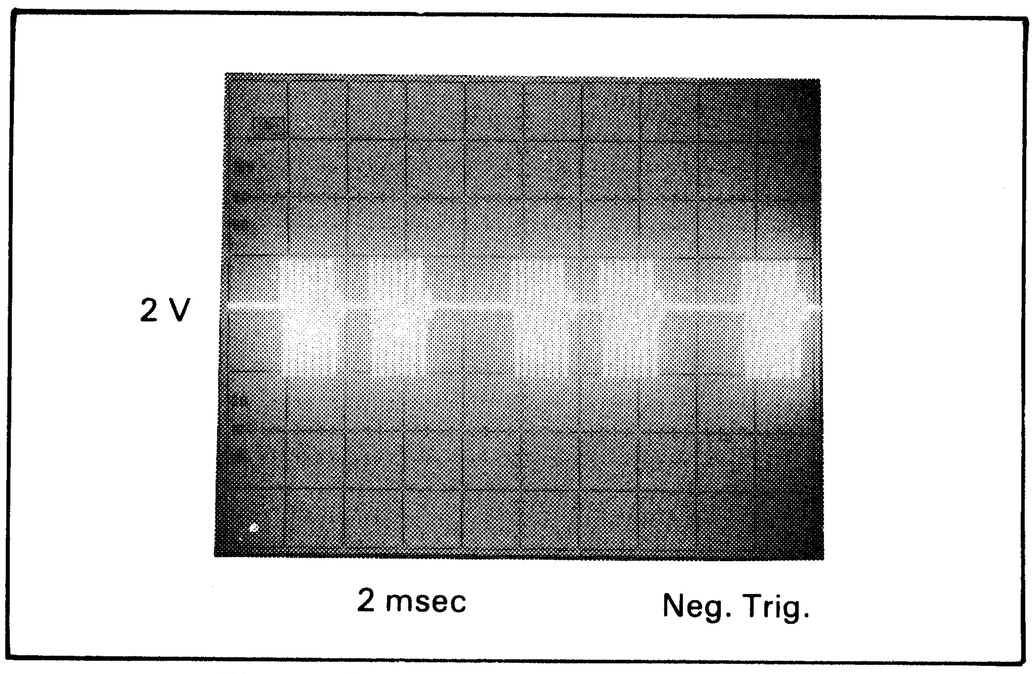

Figure 8-B-3. A/D Zero Waveform.

can be determined by checking for the correct signatures at A20U402. If a Signature Analyzer is not available, the faulty area can be determined by statically checking the A/D Converter's Digital Circuitry. This method is in the A/D Digital Circuitry Troubleshooting paragraph (Paragraph 8-B-31). The preferred method is as follows. Do the following:

1. Turn the 3456A Off.
2. Connect and set-up the Signature Analyzer as follows (Schematic 8):

Start:	A30J31-SRT	(¬_)
Stop:	A30J31-STP	(¬_)
Clock:	A30J32-A	(¬_)
Gnd:	A30J31-GND	
Hold:		Out
Self-Test:		Out

3. Move A30J33/J34 to the "2" (middle) position (Schematic 8), as shown in Figure 8-B-2.
4. Turn the 3456A On.
5. Connect the DATA PROBE of the Signature Analyzer to A20TP406. Connect one end of a clip lead to A20TP407. Using the other end of the lead, take the following signatures (Schematic 4):

Signature	Checked at
P08U	A20U402 Pin 2
HAU7	A20U402 Pin 12
6635	A20U402 Pin 6
FHCC	A20U402 Pin 10
A733	A20U404 Pin 7

l. If any signatures are wrong, troubleshoot the A/D Digital Circuitry (go to Paragraph 8-B-27). If the signatures are correct, the A/D Analog Circuitry is at fault. Continue with the next step.

m. To troubleshoot the A/D Analog Circuitry, do the following:

1. Turn the 3456A Off.
2. Carefully remove the A30 Assembly from the instrument. Set it aside.
3. Using a clip lead, carefully short across A20C403 (Integrator Capacitor, Schematic 4).
4. Make sure jumper A20J29 is still in the GND position.
5. Turn the 3456A On.
6. Using a high impedance Digital Voltmeter (like the 3456A), measure for zero volts (< ±10 mV) at A20TP402 (use ground #4 as low).
7. If the voltage is other than zero, the integrator is at fault. Replace Q406 or U405.
8. If the voltage at TP402 is zero, carefully apply +5 V dc from an external power supply to pin 6 (gate) or Q406.
9. Measure for approximately −.7 V at TP403.
10. If the voltage is wrong, the slope amp is defective. Replace U406 or diode CR402.
11. If the voltage is good, measure for approximately zero volts at TP405.
12. If the voltage is not zero, replace U409.
13. If the voltage is good, remove the +5 V from Q406 and apply −5 V to pin 6 of Q406.
14. Measure for approximately +.7 V at TP403.
15. If the voltage is wrong, replace CR403.
16. If the voltage is good, measure for +5 V at TP405.
17. If the voltage is wrong, replace U409.
18. If the voltage is good, replace C403.

8-B-22. Constant Zero Reading.

8-B-23. A Constant Zero Reading can be caused by the analog or digital circuitry in the A/D Converter. The Digital Circuitry troubleshooting is in Paragraph 8-B-27. The procedure to isolate the Digital Circuitry from the Analog Circuitry (plus the analog troubleshooting information), is as follows. Do the following:

a. Turn the 3456A Off.

b. Make sure the Integrator Capacitor A20C403 (Schematic 4) is not shorted. Replace C403, if shorted.

c. Make sure the Front/Rear Switch of the instrument is in the FRONT position.

d. Make sure the cable from the Isolation Logic Connector (A3J7) is unplugged (Schematic 12).

e. Make sure A30J35 and J36 are in the Non-Run (2 and 3) position (Schematic 8).

f. Make sure A30J33/J34 is in the "1" (Run) position (Schematic 8).

g. Place the A/D Test Jumper A20J29 (Schematic 4) in the GND position, as shown in Figure 8-B-1.

h. Turn the 3456A On.

i. Connect the vertical input of an oscilloscope to A20TP405 (use ground #4 as low). With the scope in the external trigger mode, connect the trigger input to TP404. Using the scope set-up information in Figure 8-B-3, check the waveform shown in the Figure (Schematic 4).

j. If the waveform is good, the A/D Digital Circuitry is good. The analog circuitry may be defective. Go to step m.

k. If the waveform is wrong or not present, the A/D Analog or Digital Circuitry is the cause. The faulty area can be determined by checking for the correct signatures at A20U402. If a Signature Analyzer is not available, the faulty area can be determined by statically checking the A/D Converter's Digital Circuitry. This method is in the A/D Digital Circuitry Troubleshooting paragraph (Paragraph 8-D-31). The preferred method is as follows. Do the following:

1. Turn the 3456A Off.
2. Connect and set-up the Signature Analyzer as follows (Schematic 8):

Start:	A30J31-SRT	(¬_)
Stop:	A30J31-STP	(¬_)
Clock:	A30J32-A	(¬_)
Gnd:	A30J31-GND	
Hold:		Out
Self-Test:		Out

3. Move A30J33/J34 to the "2" (middle) position (Schematic 8), as shown in Figure 8-B-2.
4. Turn the 3456A On.
5. Connect the DATA PROBE of the Signature Analyzer to A20TP406. Connect one end of a clip lead to A20TP407. Using the other end of the lead, take the following signatures (Schematic 4):

Signature	Checked at
P08U	A20U402 Pin 2
HAU7	A20U402 Pin 12
6635	A20U402 Pin 6
FHCC	A20U402 Pin 10
A733	A20U404 7

l. If any signatures are wrong, troubleshoot the A/D Digital Circuitry (go to Paragraph 8-B-27). If the signatures are good, the A/D analog circuitry is at fault. Continue with the next step.

m. To troubleshoot the A/D Analog Circuitry, do the following:

1. Turn the 3456A Off.
2. Carefully remove the A30 Assembly from the instrument. Set it aside.
3. Connect pin 10 of A20U408 (or pin 6 of P30) to ground (use ground #4).
4. Turn the 3456A On.
5. Using a logic pulser, toggle pin 9 of U401 (momentarily short pin 9 of U401 to ground).
6. Measure for approximately −12 V at the gates of Q404 and Q405. If the voltages are wrong, check for a defective U401, U407, or U408. A high (zero volts) should be noted at pin 2 and 3 of U401, and pin 13 of U408. Replace the defective IC, if any of the voltages are wrong. If the voltages are good, make sure Q404 and Q405 do not have a source to drain short (use an ohmmeter). Replace, if shorted or very leaky. If the FETs are good and operate correctly, remove the short from pin 10 of U408 (or pin 6 or P30) and continue with the next step.
7. Using a clip lead, carefully short across A20C403 (Integrator Capacitor).
8. Make sure jumper A20J29 is still in the GND position.
9. Using an external power supply, carefully apply +5 V dc to pin 6 (gate) of Q406.
10. Using a high impedance Digital Voltmeter (like the 3456A), measure for approximately +5 V (±100 mV) at TP402.
11. If the voltage is other than 5 V, the Integrator may be at fault. Replace U405 or Q406.
12. If the voltage is good, measure for approximately −.7 V at TP403.
13. If the voltage is zero or another value, make sure diodes CR402 and CR403 are not shorted. Replace, if defective. If the diodes appear good, replace U406.
14. If the votlage is good, measure for approximately zero volts at TP405.
15. If the voltage is not zero, replace U409.
16. If the voltage is good, remove the +5 V from Q406 and apply −5 V to pin 6 of Q406.
17. Measure for approximately +.7 V at TP403.
18. If the voltage is wrong, replace CR403.
19. If the voltage is good, measure for +5 V at TP405.
20. If the voltage is wrong, replace U409.

8-B-24. Inaccuracy or Noise.

8-B-25. Inaccuracy is most likely caused by the A/D Analog Circuitry, including resistor network A20U500 or Inverter U402. If the 3456A is very inaccurate (>50%), use the Overload Troubleshooting Procedure in Paragraph 8-B-20.

8-B-26. Noise is most likely caused by the A/D Analog Circuitry. However, an intermittent in the Digital Circuitry can also cause noise. This can be checked using Signature Routines. To troubleshoot for noise and inaccuracy, do the following:

a. Determine the type of failure.

b. If the 3456A is noisy or jumpy, do the following:

1. Turn the 3456A Off.
2. Make sure the Front/Rear Switch of the instrument is in the FRONT position.
3. Make sure the cable from the Isolation Logic Connector (A3J7) is unplugged (Schematic 12).
4. Make sure A30J35 and J36 are in the Non-Run (2 and 3) position (Schematic 8).
5. Move A30J33/J34 to the "2" (middle) position (Schematic 8), as shown in Figure 8-B-2.
6. Connect and set-up the Signature Analyzer as follows (Schematic 8):

Start:	A30J31-SRT	(¬_)
Stop:	A30J31-STP	(¬_)
Clock:	A30J32-A	(¬_)
Gnd:	A30J31-GND	
Hold:		Out
Self-Test:		Out

7. Turn the 3456A On.
8. Connect the DATA PROBE of the Signature Analyzer to A20TP406. Connect one end of a clip lead to A20TP407. Using the other end of the lead, take the following signatures and make sure they are stable and not jumpy (Schematic 4).

Signature	Checked at
P08U	A20U402 Pin 2
HAU7	A20U402 Pin 12
6635	A20U402 Pin 6
FHCC	A20U402 Pin 10
A733	A20U404 Pin 7

9. If any of the signatures are wrong or jumpy, the A/D Digital Circuitry is at fault (go to Paragraph 8-B-27). If the signatures are good and steady, continue with step c.

c. If the 3456A is inaccurate (or noisy), check the A/D Analog Circuitry for proper operation. Do the following:

1. Turn the 3456A Off.
2. Carefully remove the A30 Assembly from the instrument. Set it aside.
3. Using a clip lead, carefully short across A20C403 (Integrator Capacitor, Schematic 4).
4. Connect pins 4, 6, and 8 of U408 (or pins 7, 8, and 9 of P30) to +5 V.
5. Place the A/D Test Jumper A20J29 in the GND position, as shown in Figure 8-B-1.
6. Carefully connect the gate (pin 6) of A20Q406 to ground (ground #4).
7. Turn the 3456A On.
8. Using a logic pulser, toggle pin 9 of A20U402 (momentarily short pin 9 of U402 to ground).
9. Using a high impedance Digital Voltmeter (like the 3456A), measure the voltage at A20TP402. The voltage should be a stable zero volts (< ±2 mV). If the voltage is unstable or wrong, relace U405 or Q406.
10. If the voltage is good, remove the connection to ground from Q406. Measure the voltage at TP403. If the voltage is unstable (>1 mV change) or wrong (> ±.7 V), replace U406, CR402, or CR403.
11. If the voltage is good, note its value. Make sure the same voltage value is measured at the gate (pin 3) of Q407. If a different value is noted, make sure Q408 is turned on by the logic (zero volts at its gate). If it is turned on and the voltage on its source is different than its drain, replace Q408.
12. If Q408 appears to be good, measure the voltage at the gate (pin 6) of Q406. The voltage should be approximately 1/30 the value of the voltage measured at pin 3 of Q407. If the voltage is wrong, Q406 or Q407 may be defective.
13. If the voltage is good, check the Autozero Capacitor (C411). Do this by monitoring the voltage at pin 3 of Q407. Then carefully disconnect pin 8 of U408 from the +5 V supply and connect the pin to ground and remove the short from C403. The voltage at Q407 should remain approximately the same for about 10 seconds. Replace C411, if a great change is noted.
14. If the Autozero Circuitry appears to be working, go to step d.

d. Part of the A/D Digital Circuitry can cause noise and inaccuracy, mainly U402. The outputs of U402 should either be zero (ground) or the −12 V Reference Voltage. To check for the correct voltage, set the 3456A to the various slopes and measure for the correct outputs of U402. Do the following:

1. Turn the 3456A Off.
2. Make sure the A30 Assembly is still removed from the 3456A.
3. Connect pin 4 and pin 6 of U408 to +5 V and pin 8 to ground.
4. Turn the 3456A On.
5. Using a logic pulser, toggle pin 9 of U401.
6. Using the test voltmeter, measure for an accurate and stable −12 V (same voltage value measured at A20TP501, Schematic 5) at pins 2, 6, and 12 of U402. Also measure for zero (ground #4) volts at pin 10. Replace U402, if any voltages are wrong.
7. If the voltages are good, carefully disconnect the +5 V power supply from pin 4 of U408 and connect it to ground. Toggle pin 9 U401 again.
8. Measure for an accurate and stable −12 V at pin 10 of U402. Also measure for zero volts at pin 2. Replace U402, if any voltages are wrong.

e. If the previous checks are good, check the input FETs next. Do the following:

1. Turn the 3456A Off.

2. Make sure the A30 Assembly is still removed from the instrument.
3. Connect pin 10 of U408 to ground.
4. Place jumper A10J29 in the GND test position, as shown in Figure 8-B-1.
5. Turn the 3456A On.
6. Using a logic pulser, toggle pin 9 of U401.
7. Using the test voltmeter, measure between the sources and drains of the input FETs (Q402 and Q403). Make sure the voltage does not exceed 1 mV. Alos make sure the voltage is stable (<2 μV change). Replace Q402 or Q403, if the voltages are wrong.

f. If the previous checks are good and the 3456A is still inaccurate or noisy, try replacing the Integrator Capacitor (C403) or Resistor Network (U500).

8-B-27. A/D Digital Circuitry Troubleshooting.

8-B-28. The A/D Digital Circuitry consists of a decoder, latch, comparator, and various gates. Two methods can be used to check the circuitry. The preferred method is using Signature Analysis. The other method checks the A/D Digital Circuitry statically. Use the static method only when a Signature Analyzer is not available. The preferred method is in the following paragraph. The static method is in Paragraph 8-B-31.

8-B-29. SA Method. Do the following:

a. Turn the 3456A Off.

b. Connect and set-up the Signature Analyzer as follows (Schematic 8):

Start:	A30J31-SRT	(¬_)
Stop:	A30J31-STP	(¬_)
Clock:	A30J32-A	(¬_)
Gnd:	A30J31-GND	
Hold:		Out
Self-Test:		Out

c. Move A30J33/J34 to the "2" (middle) position (Schematic 8), as shown in Figure 8-B-2.

d. Turn the 3456A On.

e. Connect the DATA PROBE of the Signature Analyzer to A20TP406. Connect one end of a clip lead to A20TP407. Use the other end of the lead to take signatures (Schematic 4).

8-B-30. Refer to Table 8-B-1 for the signatures in the A/D Digital Circuitry. To determine the defective IC, start with the signatures at the output of A20U402. Determine which ones are wrong. If for example, only one signature is wrong, trace it through the various IC's until a signature is correct. Replace the IC that causes the bad signature. If all or most signatures are wrong, it may be best to half-split the circuitry. In this case, take the signatures at the output of U404. If they are good, the fault is in U401, U402, or U403. If they are wrong, U407, U408, or U404 is the cause.

NOTE

Make sure the SA probe shows toggling when taking the signature at pin 9 of A20U401.

NOTE

Make sure nothing, except the SA probe, is connected to the Integrated Circuit on which the signatures are taken.

8-B-31. Static Method. This method can be used to check the operation of the A/D Digital Circuitry statically. This is done by manually setting the circuitry to a certain slope (S-1, S-4, etc.) and noting the state of the Integrated Circuit under test. The connections used to set the A/D Converter to the various slopes are given in Table 8-B-2. The state of the Integrated Circuits with the different slopes are in Table 8-B-3. Do the following:

a. Turn the 3456A Off.

b. Refer to Table 8-B-2 and connect pins 4, 6, and 8 of A20U408 (or pins 7, 8, and 9 of A20P30) to ground (use ground #4) or +5 V, for the desired slope. For example, connect all the pins to the 3456A's +5 V power supply to select the A/D Autozero Slope (Schematic 4).

c. Refer to Table 8-B-3 for the states of the various A/D Integrated Circuitry.

d. Turn the 3456A and toggle pin 9 of U401 (momentarily short pin 9 of U401 to ground).

e. Check the states of the Integrated Circuits.

CAUTION

To prevent damage to the 3456A, always turn the instrument Off when reconfiguring A20U408 to another slope.

NOTE

Toggle pin 9 of A20U401 before checking the state of A20U401 and U402.

8-B-32. INGUARD LOGIC TROUBLESHOOTING.

8-B-33. The Inguard Logic can cause an Inoperative A/D, Range Failure, or Isolation Logic Failure. If an Isolation Logic Failure or Inoperative A/D is noted, make sure the failure is not caused by the Outguard or A/D Circuitry. Go to Paragraph 8-B-6 to determine the cause of an Isolation Logic Failure and Paragraph 8-B-16 for an Inoperative A/D. The following paragraphs have the Inguard Logic Failures and troubleshooting information.

Table 8-B-1. A/D Converter Signatures.

I.C.	Pin #	Signature	I.C.	Pin #	Signature
A20U401	1	85AA	A20U402	1	85AA
	2	65C8		2	P08U
	3	65C8		3	6525
	4	95U9		4	P08U
	5	5U5H		5	6525
	6	F729		6	6635
	7	4811		7	P39U
	8	0000		8	0000
	9	85AA*		9	4811
	10	P39U		10	FHCC
	11	14H0		11	5U5H
	12	6525		12	HAU7
	13	U250		13	85AA
	14	P0C0		14	5U5H
	15	P0C0		15	HAU7
	16	85AA		16	85AA
A20U403	1	85AA	A20U404	1	HU69
	2	PC93		2	H8HA
	3	6P39		3	1C70
	4	U250		4	P0C0
	5	6P39		5	0990
	6	9F69		6	14H0
	7	0000		7	A733
	8	9F69		8	0000
	9	0990		9	PA10
	10	95U9		10	4283
	11	F729		11	9F69
	12	4283		12	PC93
	13	85AA		13	1C70
	14	85AA		14	H8HA
				15	5AF3
				16	85AA
A20U407	1	85AA	A20U408	1	H8HA
	2	P012		2	1C70
	3	65C8		3	85AA
	4	2299		4	85AA
	5	A733		5	85AA
	6	5AF3		6	85AA
	7	HU69		7	85AA
	8	0000		8	85AA
	9	85AA		9	85AA
	10	0000		10	85AA
	11	85AA		11	85AA
	12	0000		12	0000
	13	85AA		13	65C8
	14	85AA		14	HU69
	15	0000			
	16	85AA			

* Make sure the SA Probe is toggling, when taking this signature.

Table 8-B-2. A/D Slope Configuration.

Slope	A20U408 Configuration		
	Pin 8	Pin 4	Pin 6
AZ	1	1	1
S−0	0	1	0
S−1	1	0	0
S+2	0	0	1
S−3	1	0	1
S+4	0	1	1
S−4	1	1	0

Table 8-B-3. Static State of the A/D Digital Circuitry.

I.C.	Pin #	AZ	S-0	S-1	S+2	S-3	S+4	S-4
A20U401	4	0	1	0	0	0	0	1
	5	0	1	0	0	0	0	1
	6	1	1	1	0	1	1	1
	7	1	1	1	0	1	1	1
	10	0	0	0	0	1	0	0
	11	0	0	0	0	1	0	0
	12	1	0	1	1	1	0	1
	13	1	0	1	1	1	0	1
	14	1	0	0	0	0	0	0
	15	1	0	0	0	0	0	0
A20U402	2	0	1	0	0	0	1	0
	3	1	0	1	1	1	0	1
	6	1	1	1	1	0	1	1
	7	0	0	0	0	1	0	0
	9	1	1	1	0	1	1	1
	10	0	0	0	1	0	0	0
	11	0	1	0	0	0	0	1
	12	1	0	1	1	1	1	0
A20U403	2	0	0	0	0	0	1	0
	3	1	1	1	1	1	0	1
	4	1	0	1	1	1	0	1
	6	0	1	1	1	1	1	1
	9	0	0	0	0	0	0	1
	10	0	1	0	0	0	0	1
	11	1	1	1	0	1	1	1
	12	0	0	0	1	0	0	0
A20U404	4	1	0	0	0	0	0	0
	5	0	0	0	0	0	0	1
	6	0	0	0	0	1	0	0
	7	0	0	1	0	0	0	0
	10	0	0	0	1	0	0	0
	11	0	1	0	0	0	0	0
	12	0	0	0	0	0	1	0
A20U407	4	1	1	0	1	1	1	1
	5	0	0	1	0	0	0	0
	6	1	0	1	0	1	0	1
	7	0	1	0	1	0	1	0
A20U408	1	0	1	1	0	0	0	1
	2	0	0	1	1	1	0	0
	14	0	1	0	1	0	1	0

NOTE 1: 1 = High = 0 V, 0 = Low = −12 V
NOTE 2: For the correct levels on U401 and U402, make sure that pin 9 of U401 is toggled after changing states.

8-B-34. Unless otherwised noted, all checks and troubleshooting information in the following paragraphs are used in conjunction with Schematic 8. Also, the common ground used is ground #4.

8-B-35. Pre-Troubleshooting Information.

8-B-36. Before troubleshooting the Inguard Logic, check for the following:

a. Make sure the +5 V Power Supply is good (A30U13 pin 40).

b. Check and make sure pins 2 and 3 of U13 have a 5.85 MHz (60 Hz Option) or 4.875 MHz (50 Hz Option) Clock Signal. If they are not present, troubleshoot the clock circuitry. Do the following:

1. Check for a clock signal (5.85 MHz for the 60 Hz Option or 4.875 MHz for the 50 Hz Option) at A30TP3. If the signal is not present, replace Y1, Q1, or U12.
2. If the signal is present, replace U12.

c. Make sure the $\overline{\text{RESET}}$ Line of the processor (A30U13) is good. The line can be checked by doing the following:

1. Using a logic probe, monitor pin 4 of A30U13. The line should be high. If the line is low, go to Paragraph 8-B-39 for troubleshooting. If the line is high, continue with the next step.
2. Using a logic pulser, toggle pin 40 of A4U15 (momentarily short pin 40 of U15, shown on Schematic 9, to ground).
3. The $\overline{\text{RESET}}$ line of the Inguard Processor (A30U13 pin 4) should go from high to low to high. If this does not happen, go to Paragraph 8-B-39 for troubleshooting. If it is good, the RESET line is good. (Note: The $\overline{\text{RESET}}$ line may continue toggling for certain Inguard failures.)

d. Check the ROM of the processor (A30U13). Do the following:

1. Turn the 3456A Off.
2. Unplug the cable from the Isolation Logic Connector (A3U7, Schematic 12).
3. Move A30J35 and J36 to the Non-Run (2 and 3) position.
4. Turn the 3456A On.
5. Using a logic probe, monitor U13 pin 8. With the 3456A's Front/Rear Switch in the FRONT position, pin 8 should be high. With the switch in the REAR position, the pin should toggle. Replace U13, if other conditions are noted. (Note: Make sure the Front/Rear Switch is good, before replacing U13.)

e. Check and make sure pin 11 of A30U13 is toggling. If it is not toggling, replace A30U13.

f. Check and make sure pin 9 of A30U6 is oscillating. If not oscillating, do the following:

1. Make sure pin 10 of U12 is oscillating. If not oscillating, replace U12.
2. Make sure pin 8 of U5 is oscillating. If not oscillating, make sure pin 12 of U5 is oscillating (or high). If wrong, replace U6. If the pin is good, replace U5.
3. If pin 8 of U5 is oscillating, replace U6.

8-B-37. Range and Inguard Logic Failure.

8-B-38. To troubleshoot for a Range or Inguard Logic Failure, do the following:

a. Turn the 3456A Off.

b. Make sure the Front/Rear Switch of the instrument is in the FRONT position.

c. Make sure the cable from the Isolation Logic Connector (A3J7) is unplugged (Schematic 12).

d. Move A30J33/J34 to the "2" (middle) position, as shown in Figure 8-B-2.

e. Move A30J35 and J36 to the Non-Run (2 and 3) position.

f. Connect (to A30 Assembly) and set the Signature Analyzer as follows:

Start:	A30J31-STR	(⎍)
Stop:	A30J31-STP	(⎌)
Clock:	A30J32-A	(⎍)
Gnd:	A30J31-GND	
Hold:		Out
Self-Test:		Out

g. Using the SA probe, take the following signatures and check for the correct condition of the probe (Off, On, or Toggling). Check the following:

SA Connection		Signature	Probe State
A30P21	Pin 1 (F/R)	—	Off
	Pin 6 (PROG)	—	On
	Pin 7 (LMES)	7F04	Toggling
	Pin 8 (LGND)	9A76	Toggling
A30P30	Pin 4 (TRIG)	00F0	Toggling
	Pin 5 (ALE)	0000	Toggling
	Pin 6 (LRU)	6578	Toggling
	Pin 7 (HSA)	P242	Toggling
	Pin 8 (HSC)	3718	Toggling
	Pin 9 (HSB)	4661	Toggling
	Pin 10 (+5V)	00F0	On

h. If any signatures or the condition of the SA Probe are wrong, continue with the next step. If the signatures are good, go to step j.

i. Do the following:

1. Turn the 3456A Off.

2. Unsolder and remove one side of jumper A30JP1 from the A30 board.
3. Connect pin 4 of A30U9 to +5 V.
4. Turn the 3456A On.
5. Troubleshoot the 3456A using the procedure in Figure 8-B-4.

j. Move the Clock of the Signature Analyzer to A30J32-C.

k. Check for the following signatures at A30U13:

A30U13 Pin #	Signature
12	0030
13	0020
14	0020
15	0020
16	0030
17	0030
18	0030
19	0030

l. If any signatures are wrong, replace U13.

m. If the signatures are good, do the following:

1. Turn the 3456A Off.
2. Reconnect the cable to the Isolation Logic Connector (A3J7, Schematic 12).
3. Move A30J35 and J36 to the Run (1 and 2) position.
4. Move A30J33/J34 to the "1" (first) position.
5. Move the Clock of the Signature Analyzer to A30J32-B.
6. Turn the 3456A On.
7. Set the 3456A to Trigger HOLD and 4WR Ohms Function.
8. Set the 3456A to the following functions and take the signatures on A30P21 as follows.

Function	A30P21 Pin #	Signature
DCV	2	0000
DCV	3	0000
DCV	4	0001
DCV	5	0007
ACV	2	0004
ACV	3	0000
ACV	4	0001
ACV	5	0000
2WRΩ	2	0000
2WRΩ	3	0004
2WRΩ	4	0003
2WRΩ	5	0007

9. If any signatures are wrong, replace A30U16 or U13.
10. If the signatures are good, set the clock of the Signature Analyzer to: (⌝)
11. Set the 3456A to the following functions and take the signatures on A30P21 as follows.

Function	A30P21 Pin #	Signature
DCV	2	0002
DCV	3	0006
DCV	4	0007
DCV	5	0000
ACV	2	0002
ACV	3	0006
ACV	4	0007
ACV	5	0000
2WRΩ	2	0002
2WRΩ	3	0006
2WRΩ	4	0007
2WRΩ	5	0000

12. If any signatures are wrong, replace A30U16 or U13.
13. If the signatures are good, replace A20U702.

8-B-39. Isolation Logic Troubleshooting.

8-B-40. To troubleshoot the Inguard Isolation Logic, do the following:

a. Press the 3456A's RESET button and then the TEST button.

b. Set the instrument to Test #3 by pressing the 3, STORE, and 5 (COUNT) button.

c. Connect the vertical input of an oscilloscope to the junction of A30R14 and R15 (as shown below). Using the set-up information in Figure 8-B-5, check for the waveform shown in the figure.

d. If the waveform is missing or incorrect, replace A30T2.

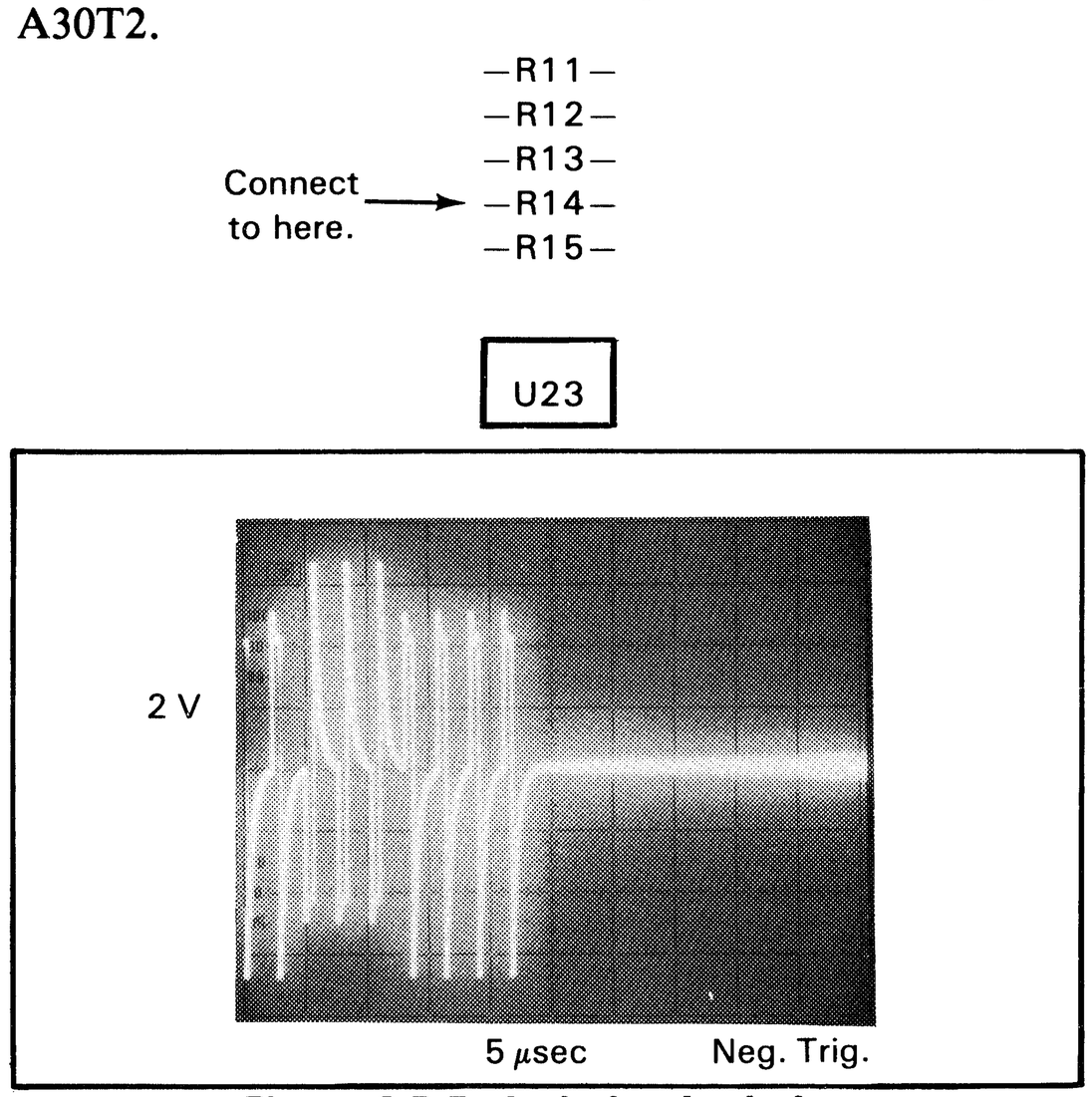

Figure 8-B-5. Isolation Logic Input.

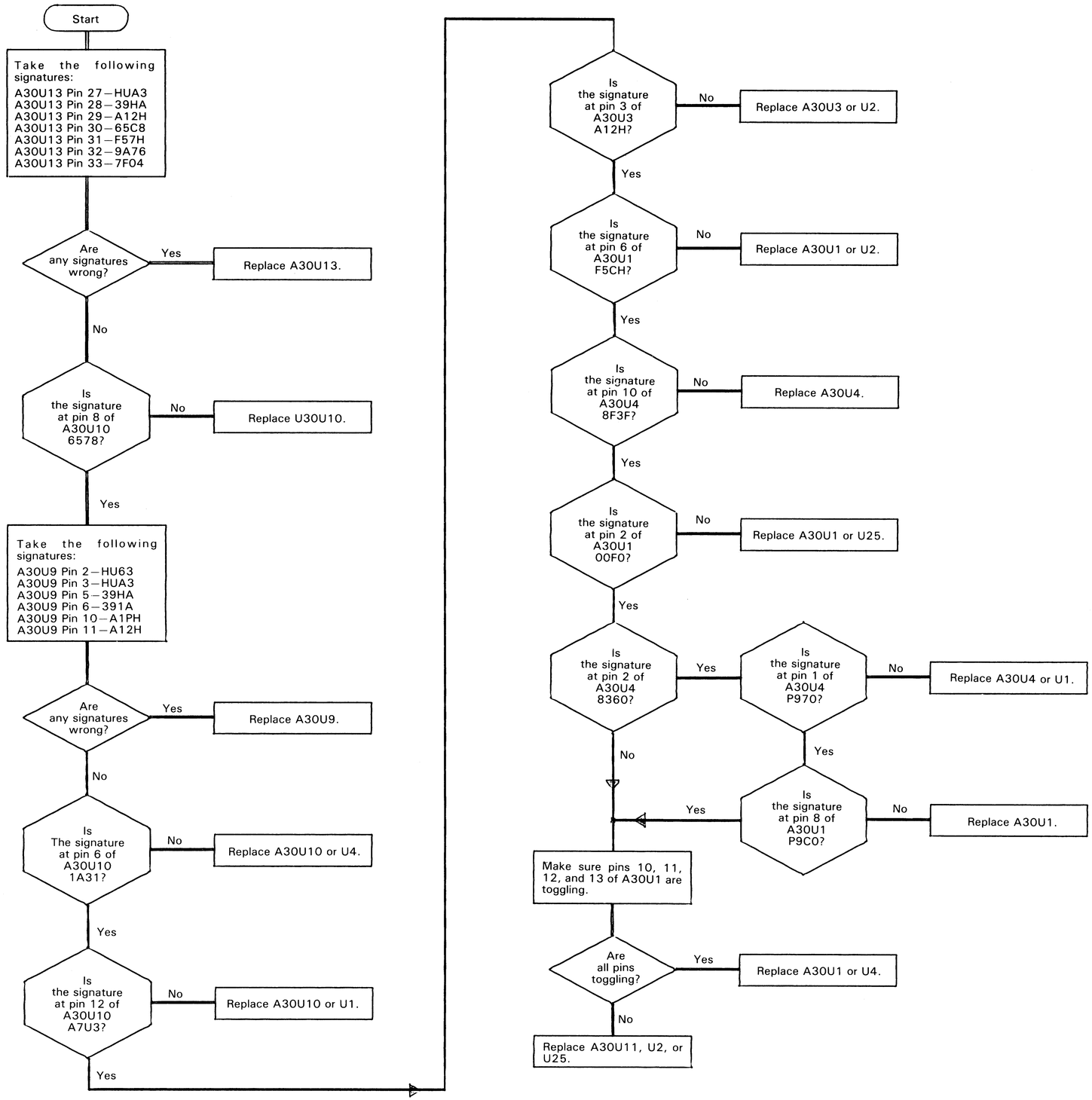

Figure 8-B-4. Inguard Signature Analysis Routines.

e. If the waveform is good, check for the waveforms shown in Figure 8-B-6A and B at A30TP1 and TP2, respectively. Make sure the waveforms are as shown in the figure.

f. If both waveforms or the waveform at TP1 are wrong or missing, replace A30U23. If only the waveform at TP2 is missing, do the following:

1. Make sure pin 10 of A30U20 is toggling.
2. If it is toggling, replace U20.
3. It it is not toggling, make sure pin 2 and 3 of U21 are toggling.
4. If it is toggling, replace U21.
5. If it is not toggling, replace U23.

g. If the waveforms are good, do the following:

1. Using the set-up information in Figure 8-B-7A, check for the waveform shown in the figure at A30U24 pin 3, 4, 5, 6, and 13.
2. Using the same set-up, check for the waveform shown in Figure 8-B-7B at U24 pin 10, 11, and 12.
3. If any pulses of the waveform are missing or have a different shape, replace U24. If the pulses or the waveform are good, continue with step i.

h. If the RESET line is operating correctly (as checked in Paragraph 8-B-36c), continue with step j. If the RESET line is inoperative, do the following:

1. Press the 3456A's RESET button.
2. Using a logic probe, monitor pin 8 of A30U22.
3. Using a logic pulser, toggle pin 40 of A4U15 (momentarily connect pin 40 of U15, shown on Schematic 9, to ground).
4. If pin 8 of U22 does not toggle, replace U22.
5. If it does toggle, make sure capacitor A30C7 and resistor R10 are good. If the components appear good, replace U21.

i. Make sure the 3456A is in Test #3 (see step a, b, and c). Then make sure the INT (Interrupt) line at A30U13 pin 6 is toggling. If not toggling, replace A30U20.

j. Make sure the READ line at A30U13 pin 8 is toggling. If not toggling, replace U13.

k. Refer to Figure 8-B-8. Note that the waveform has a total of nine pulses. The first two pulses indicate a High condition, the next three a Low, and the last four a High. The shape of the pulses is also important. Once it has been determined how the waveform should look like, check for the waveform at A30U18 pin 3. (Use the scope set-up information in the figure.)

l. If the waveform is good, replace A30T1.

m. If there are more than 9 pulses, replace A30U17.

n. If there are some pulses with the wrong shape, replace A30U15 or U16.

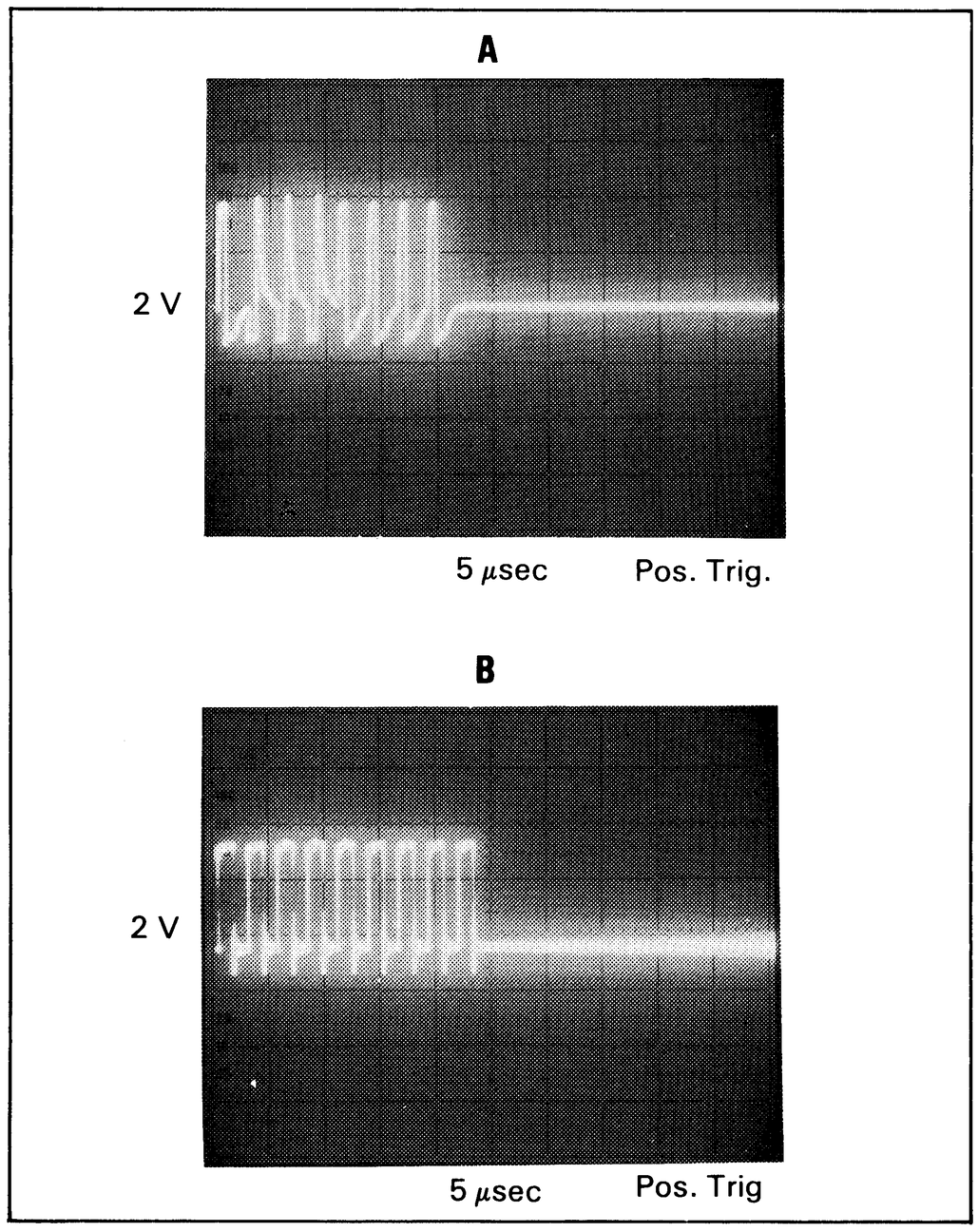

Figure 8-B-6. Signal at A30TP1 and TP2.

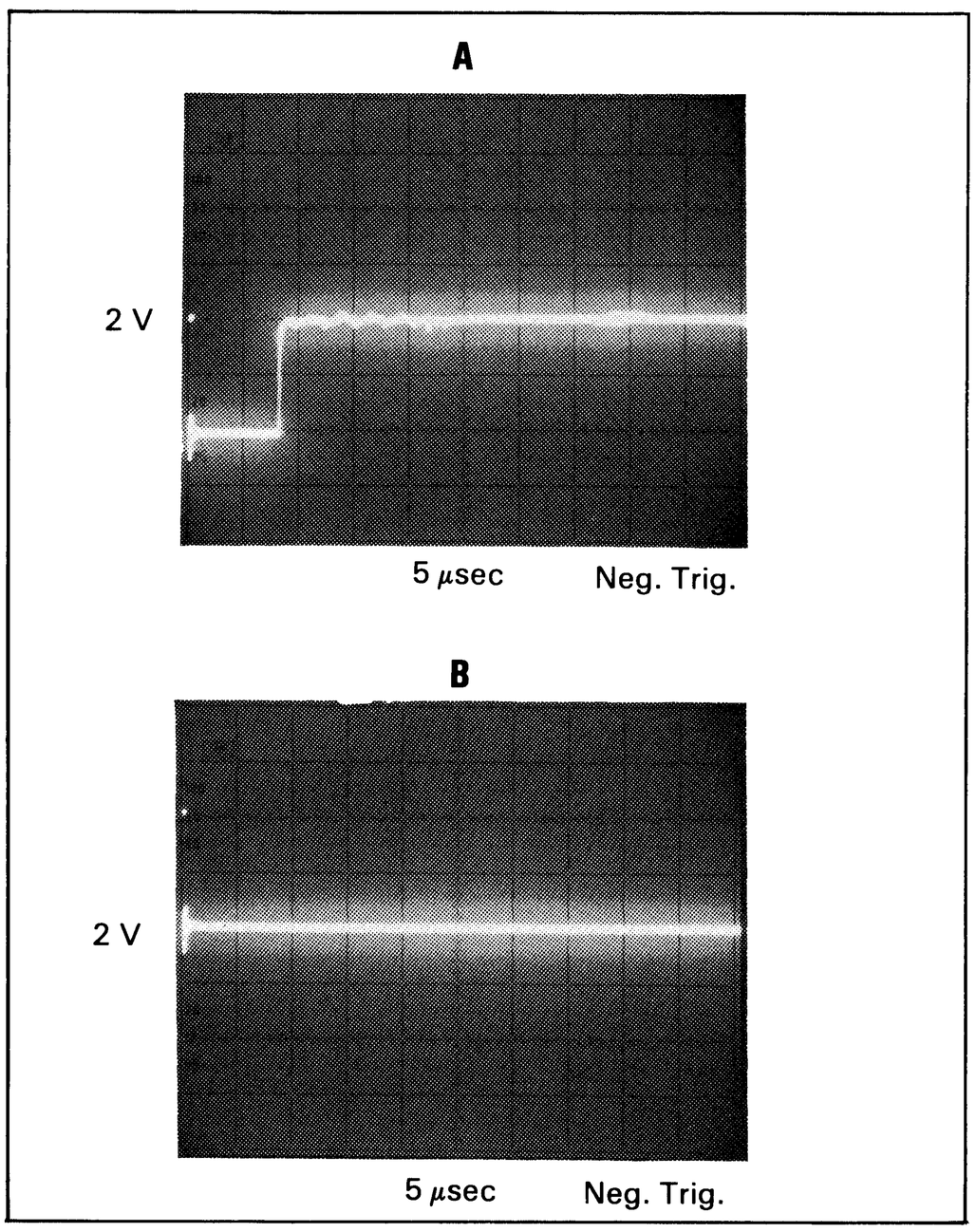

Figure 8-B-7. Output of A30U24.

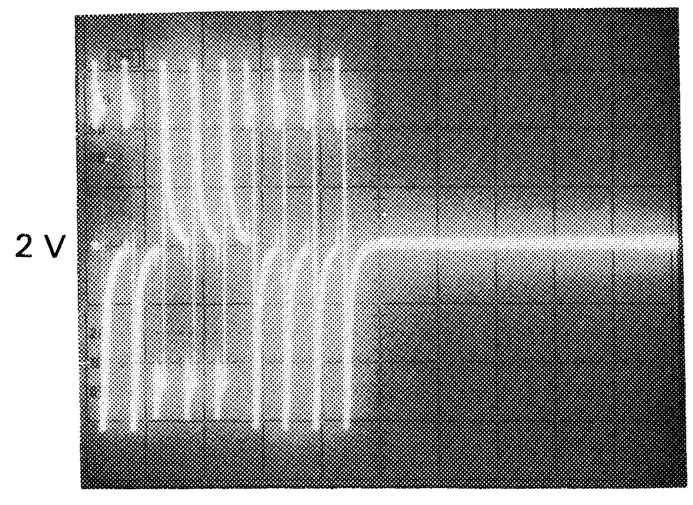

Figure 8-B-8. Output of Inguard Isolation Logic.

o. If there are some pulses missing (either all of the Low or all of the High pulses), do the following:

1. Using a dual channel oscilloscope, connect channel A to A30U19 pin 5 and channel B to U19 pin 6.
2. Set the scope to the set-up information in Figure 8-B-9 and check for the waveform shown in the figure.
3. If the waveforms are good, replace A30U18.
4. If the waveforms are wrong, check for the waveform in Figure 8-B-10 at A30U19 pin 2 (use the set-up information in the figure).

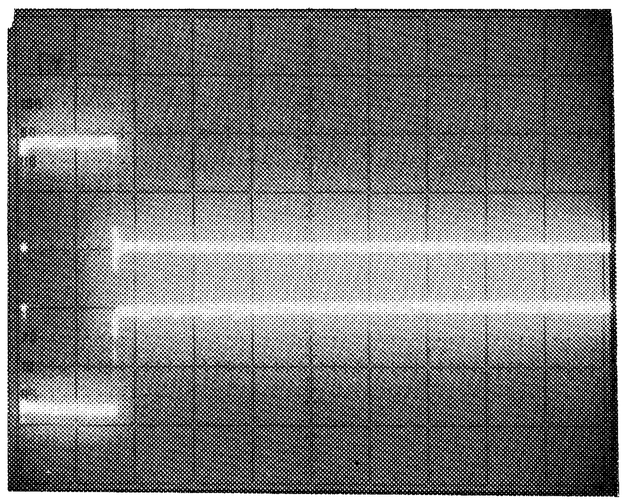

Figure 8-B-9. Output of A30U19.

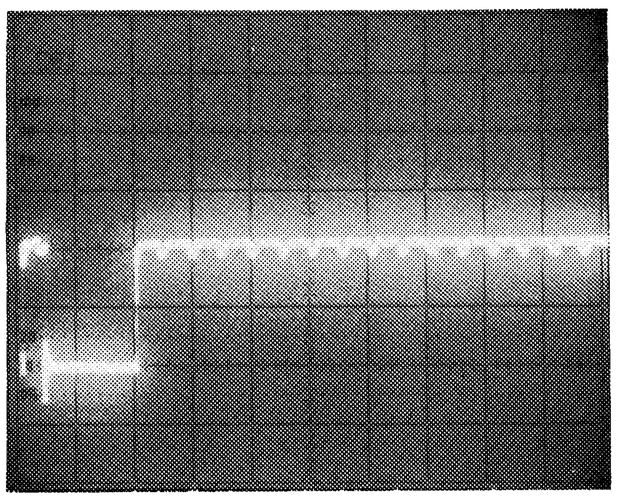

Figure 8-B-10. Output of Shift Register.

5. If the waveform is wrong, replace U15 or U16.
6. If the waveform is good, replace U19.

p. If the waveform is missing, do the following:

1. Using the set-up information in Figure 8-B-11, check for the waveform shown in the figure at A30U19 pin 3.
2. If the waveform is missing, check for the inverse of the waveform in Figure 8-B-11 at A30U14 pin 10. If the waveform is good, replace U14. Replace U13, if the waveform is missing.
3. If the waveform in Figure 8-B-11 is good, make sure A30U15 pin 1 is toggling. Replace U13, if not toggling.
4. If pin 1 of U15 is toggling, check for the waveform in Figure 8-B-12 at A30U18 pin 12 (use the set-up information in the figure).
5. If the waveform is good, replace U18.
6. If the waveform is missing, use the logic probe and check for toggling at pin 4 or U14. If not toggling, replace U14. If toggling, check for toggling at pin 2 of U14. If toggling, replace U14. If not, replace U17, U19, or U14.

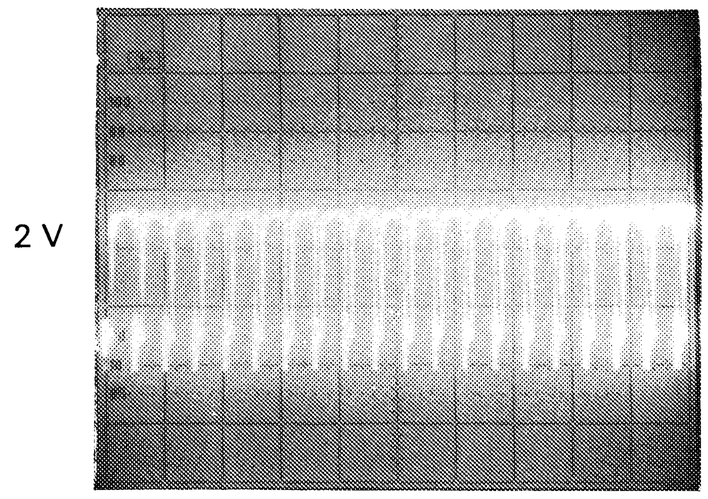

Figure 8-B-11. ALE Clock Signal.

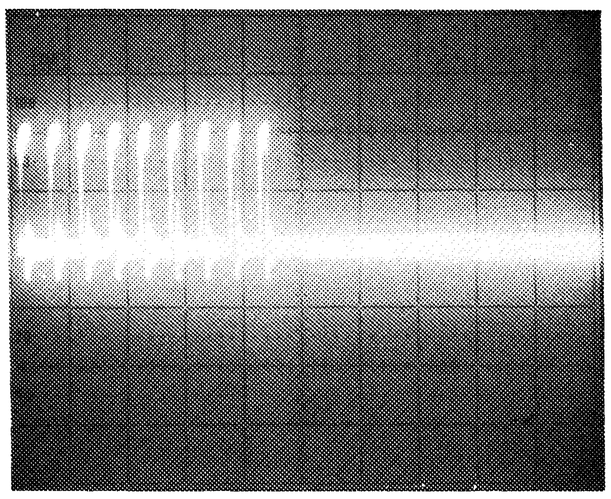

Figure 8-B-12. Isolation Logic Clock Signal.

SERVICE GROUP C

Service Group C Contents

Title	Paragraph
General	8-C-1
Pre-Troubleshooting Information	8-C-3
Switch Closure Command Table	8-C-6
DCV Troubleshooting	8-C-8
All Ranges Inoperative (Overload, Zero Reading, Accuracy, and Noise)	8-C-10
Some Ranges Inoperative	8-C-12
DCV Circuitry Isolation	8-C-15
Input Switching Troubleshooting	8-C-17
General	8-C-18
All Ranges Inoperative	8-C-21
Some Ranges Inoperative	8-C-28
Input Amplifier Troubleshooting	8-C-35
General	8-C-36
All Ranges Inoperative	8-C-39
Some Ranges Inoperative	8-C-41
Gate Bias Amplifier	8-C-45
Input Amplifier	8-C-47
Ratio Failure	8-C-52
Analog Filter Failure	8-C-55

SERVICE GROUP C

8-C-1. GENERAL.

8-C-2. This Service Group has the DCV, Ratio, and Analog Filter troubleshooting information for the 3456A. The Service Group is symptoms oriented (what fails) with different levels of troubleshooting. The first level uses procedures to determine the general area in the 3456A which causes the failure. The other levels have troubleshooting information for the areas.

8-C-3. PRE-TROUBLESHOOTING INFORMATION.

8-C-4. Various Switching FETs and Relays are used in the DCV Function. The switches are turned On and Off by Comparators and Transistors. The Comparators and Transistors are controlled by the Inguard Logic. If a FET or Relay is suspected defective, make sure the logic is correct before replacing the FET or Relay. A FET is normally Off with its gate at −18 V (and turns On at the gate bias level). Go to Service Group B if the Inguard Logic is inoperative.

8-C-5. Some troubleshooting procedures in this Service Group requires that the 3456A's Autozero must be either On or Off, to determine the failure. Make sure the instrument is in the given state, when troubleshooting.

8-C-6. SWITCH CLOSURE COMMAND TABLE.

8-C-7. Table 8-C-1 has the commands used to control the state of the Inguard Switches. Use the table to determine which FET or Relay is On or Off in each function and range.

8-C-8. DCV TROUBLESHOOTING.

8-C-9. The following information can be used to troubleshoot the 3456A for any Inoperative DCV Ranges, DCV Accuracy, and DCV Noise Failures.

8-C-10. All Ranges Inoperative (Overload, Zero Reading, Accuracy, or Noise).

8-C-11. This failure can show up as a constant Overload (OL), Zero Reading, Noise, or Inaccuarcy on all ranges. The Input Switching, Input Amplifier, and A/D can cause the failure. To determine the faulty circuitry, do the following:

a. Press the 3456A's RESET button.

b. Set the instrument to the 10 V Range and the 6 Digit Mode (by storing "6" into the N DIG DISP Register).

c. Position the jumper on A20J29 as shown below.

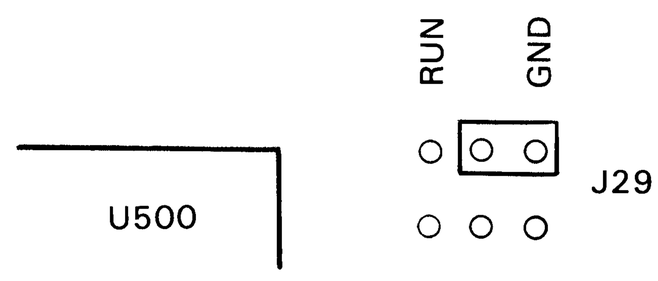

d. Turn Autozero Off.

e. If the reading on the 3456A's display is other than zero volts (±3 counts), the A/D Converter is inoperative. Go to Service Group B for troubleshooting.

f. Remove the jumper from J29.

g. Apply a stable and accurate +10 V dc to the VOLTS Input Terminals. If an accurate voltage is not available, use one of which the exact value is known.

h. Using a clip lead, connect the High Input (High VOLTS Terminal) to A20TP401.

i. If the reading is not a stable and accurate +10 V, make sure the Reference Voltages are good. Check for a stable −12 V at A20TP501 and TP502, and a stable +12 V at TP503. If the voltages are good, the A/D Converter is defective. Go to Service Group B for troubleshooting. If the voltages are wrong, the Reference is defective. Go to Service Group F for troubleshooting.

j. With a high impedance and accurate Digital Voltmeter (like the 3456A), measure for +10 V at either side of A20R103. If the voltage is good, the Input Amplifier is at fault. Go to Paragraph 8-C-35 for troubleshooting.

k. If the voltage is wrong or noisy, unplug the cable from A20J19.

l. If the voltage is now good, the Input Amplifier is at fault. Go to Paragraph 8-C-35 for troubleshooting.

m. If the voltage is still wrong, the Input Switching is at fault. Go to Paragraph 8-C-17 for troubleshooting.

8-C-12. Some Ranges Inoperative.

8-C-13. This failure can show up as a Constant Overload (OL), Zero Reading, Noise, or Inaccuracy on some ranges. This is often caused by certain defective FETs and Switches in the Input Switching and Input Amplifier Circuitry.

Table 8-C-1. Inguard Switch Closure Commands.

Function	Range	Switch Closure Commands					
		H4WH HDH LTS7 HDL	LGS HAM HAL HAC	HACV HDHM HDCH HDCL	HACD LDE HL HM	HA1 HA2 HA10 HA100	H1 H2 H3 H4
DCV	100 mV	0011	0000	0001	0001	0001	0010
DCV	1 V	0011	0010	0001	0001	0010	0010
DCV	10 V	0011	0110	0001	0001	1000	0010
DCV	100 V	0110	0010	0010	0001	0010	0010
DCV	1000 V	0110	0110	0010	0001	1000	0010
ACV	1 V	0010	0111	1000	0000	1000	1000
ACV	10 V	0010	0111	1000	0010	1000	0100
ACV	100 V	0010	0111	1000	0001	1000	0010
ACV	1000 V	0010	0111	1000	0011	1000	0001
ACV + DCV	1 V	0010	0111	1000	0000	1000	1000
ACV + DCV	10 V	0010	0111	1000	0010	1000	0100
ACV + DCV	100 V	0010	0111	1000	0001	1000	0010
ACV + DCV	1000 V	0010	0111	1000	0011	1000	0001
2-WRΩ	100	0011	0000	0101	0011	0001	0001
2-WRΩ	1 K	0011	0010	0101	0011	0010	0001
2-WRΩ	10 K	0011	0010	0101	0001	0010	0010
2-WRΩ	100 K	0011	0100	0101	0001	0100	0010
2-WRΩ	1 M	0011	0100	0101	0010	0100	0100
2-WRΩ	10 M	0011	0100	0101	0000	0100	1000
2-WRΩ	≥ 100 M	0011	0100	0111	0000	0100	1000
4-WRΩ	100	1010	1000	0100	0011	0001	0001
4-WRΩ	1 K	1010	1010	0100	0011	0001	0001
4-WRΩ	10 K	1010	1010	0100	0001	0010	0010
4-WRΩ	100 K	1010	1100	0100	0001	0100	0010
4-WRΩ	1 M	1010	1100	0100	0010	0100	0100
4-WRΩ	10 M	1010	1100	0100	0000	0100	1000
4-WRΩ	≥ 100 M	1010	1100	0110	0000	0100	1000
O.C. 2-WRΩ	100	0011	0000	0101	0TT1	0001	00TT
O.C. 2-WRΩ	1 K	0011	0010	0101	0TT1	0010	00TT
O.C. 2-WRΩ	10 K	0011	0010	0101	0T01	0010	00T0
O.C. 2-WRΩ	100 K	0011	0100	0101	0T01	0100	00T0
O.C. 4-WRΩ	100	1010	1010	0100	0TT1	0001	00TT
O.C. 4-WRΩ	1 K	1010	1010	0100	0TT1	0010	00TT
O.C. 4-WRΩ	10 K	1010	1010	0100	0T01	0010	00T0
O.C. 4-WRΩ	100 K	1010	1010	0100	0T01	0100	00T0
Ratio Ref	100 mV	T01T	T000				
Ratio Ref	1 V	T01T	T0T0				
Ratio Ref	10 V	T01T	TTT0				
Test #	4	0110	0110	0000	0001	1000	0010
Test #	5	0110	0010	0000	0001	0010	0010
Test #	6	0110	0000	0000	0001	0001	0010
Test #	7	0000	0110	0010	0001	1000	0010
Test #	8	0010	0111	0010	0101	1000	0000
Test #	9	0010	0111	1010	1000	1000	1000
Test #	10	0110	0100	0110	0000	0100	1000
Test #	11	0011	0100	0111	0000	0100	1000
Test #	12	0010	0101	1100	1010	0100	0100

Note: 1 = High, 0 = Low, T = Toggle

8-C-14. The faulty circuitry can often be determined by what range(s) fail. Look for the following symptoms.

a. If only one range or certain ranges fail, the cause is most likely open or shorted FETs in the Input Switching or Input Amplifier Circuitry. For failues in the Input Switching Circuitry, go to Paragraph 8-C-17 for troubleshooting. For failures in the Input Amplifier, go to Paragraph 8-C-35 for troubleshooting. The following is a listing of the ranges and most likely causes.

Only Ranges Fail	Cause
100 mV	Input Amplifier
100 mV, 1 V, 10 V	Input Switching
1 V, 100 V	Input Amplifier
10 V, 1000 V	Input Amplifier
100 V, 1000 V	Input Switching

Only Ranges Good	Cause
100 mV	Input Amplifier
1 V, 100 V	Input Amplifier
10 V, 1000 V	Input Amplifier

b. If the lower ranges fail or are less accurate than the higher ranges, the failure can be caused by leaky or partially shorted FETs. For example, the 10 V Range may be good with the 1 V and 100 mV Ranges reading getting progressively worse. To determine the faulty circuitry, further isolation is necessary. Go to the next paragraph to isolate the circuitry.

8-C-15. DCV Circuitry Isolation.

8-C-16. The following is a procedure to isolate the faulty DCV Circuitry causing range failures due to leakage.

a. Press the 3456A's RESET button.

b. Set the instrument to the Digit Mode (by storing "6" into the N DIG DISP Register).

c. Turn Autozero Off.

d. Apply a stable and accurate +100 mV dc to the VOLTS Input Terminals (an accurate and stable +1 V can be used instead of +100 mV). If an accurate voltage is not available, use one of which the exact value is known.

e. With a high impedance and accurate Digital Voltmeter (like the 3456A), measure the voltage at either side of A20R103.

f. If the voltage is a stable and accurate +100 mV (or 1 V), the Input Amplifier is at fault. Go to Paragraph 8-C-35 for troubleshooting.

g. If the voltage is still wrong, unplug the cable from A20J19.

h. If the voltage changes to another value or the same value as the input voltage, the Input Amplifier is at fault. Go to Paragraph 8-C-35 for troubleshooting.

i. If the voltage is still wrong, the Input Switching is at fault. Go to Paragraph 8-C-17 for troubleshooting.

8-C-17. INPUT SWITCHING TROUBLESHOOTING.

8-C-18. General.

8-C-19. Before troubleshooting the Input Switching Circuitry, make sure the failure is not in the Input Amplifier. Refer to Paragraph 8-C-8 and 8-C-15 to determine the faulty circuitry.

8-C-20. Failures caused by the Input Switching can be a Low, High, Zero, or Overload (OL) Reading. The failures can be caused by Open FETs and Relays, Shorted FETs and Relays, and/or Leaky FETs and Relays. Failures can also be caused by the Gate Bias Amplifier and Analog Filter. The following paragraphs have the DCV Failures and possible causes.

NOTE

The Charge Dump and Charge Correction Adjustments may have to be readjusted, if any components in the Input Switching Circuitry are replaced. Go to Service Group F for the Adjustment Procedure.

8-C-21. All Ranges Inoperative.

8-C-22. This type of failure can be a Zero, Overload (OL), Inaccurate, (High or Low), or Noisy Readings. Another possible failure is a floating reading (no change when an input is connected or disconnected). To help find the faulty component, first determine what the failure is (Overload, Zero, etc.). This is done by applying a voltage with its amplitude the same as the full scale value of a failing range (1 V for an inoperative 1 V Range, etc.) and noting the failure. The following are the failures and troubleshooting information.

8-C-23. Zero Reading. Since this failure is on all ranges, the cause is most likely in the Lower Input Node (drain side of A20Q103). Do the following:

a. Press the 3456A's RESET button.

b. Set the instrument to the 10 V Range and turn Off A20Q103 (by connecting its gate to A20TP105).

c. With a high impedance Digital Voltmeter (like the 3456A), measure the voltage on either side of A20R103.

d. Set the 3456A to the 4-WRΩ Function. If the voltage read on the Test Voltmeter appears to be changing from approximately zero to some negative value, A20Q105 is shorted or very leaky. If the voltage remains steady, Q102 is shorted or very leaky.

8-C-24. Overload Reading. This failure is normally noted when a high level voltage (> ±12 V) is on either the Upper (source of Q103) or Lower (drain of Q103) Input Node. This is normally caused when the gate of a turned off FET shorts to the Input Node. To troubleshoot Overload Failures on all ranges, do the following:

a. Turn the 3456A Off.

b. Place A30J35 (on the Inguard Logic Assembly) in the "TEST" position (position 2 and 3).

NOTE

Make sure A30J35 (on the Inguard Logic Assembly) is placed back in the "RUN" position (position 1 and 2), when the troubleshooting procedure is completed or after repairing the 3456A.

c. Turn the 3456A On.

d. If the Overload condition disappears and zero is displayed, replace A20Q102.

e. If the Overload condition remains, turn Off A20Q103 (by connecting its gate to A20TP105).

f. If the Overload condition remains, measure the voltage on either side of A20R103 with a high impedance Digital Voltmeter (like the 3456A). If the voltage switches between an approximately zero to some negative value (> −12 V), Q103 is shorted. Replace the FET.

g. If the Overload condition disappears, a FET on the Upper Input Node is shorted. With a high impedance Digital Voltmeter (like the 3456A), measure the voltage on the Upper Input Node (drains of A20Q109, Q110, Q112, Q115, and Q116). The voltage should be larger than −12 V for an overload condition. Do the following:

1. Set the 3456A to the ACV Function.
2. If the voltage changes to a low value, Q110 is shorted. If not, set the 3456A to the 4-WRΩ Function.
3. If the voltage changes to a low value, Q115 is shorted. If not, Q112 is shorted.
4. If the reading is still an Overload, check for a shorted Q112.
5. A shorted Q109 and Q116 can also cause an overload. However, both FETs have to be shorted. If only one FET is shorted, the overload should only be on some ranges.

8-C-25. Floating Reading. A floating reading is when a reading is displayed and changes very little or not at all when an input (different from the reading) is applied to the 3456A. This may also show up as an overload condition on the lower ranges (100 mV and 1 V) and is normally caused by an open circuit in the main measuring path. If all ranges show the symptoms, check the following :

a. Make sure the Gate Bias Amplifier is good. The amplifier can be checked by applying +5 V to its input (pin 3 of A20Q120) and then checking its output (A20TP104). Since the gain of the amplifier is X1, the output should be the same as the input (+5 V, within 5 mV). If the output is incorrect, replace A20Q120 or U105.

b. Make sure A20Q103 is not open. This can be checked by turning the 3456A's Autozero off and shorting the source to the drain of Q103. If the 3456A can now make a normal DCV measurement, replace Q103.

c. Try replacing Q102.

d. If the readings are still floating, check for an open circuit path in the A20K102, K103, Q109, and Q116 circuitry. An open can easily be checked by shorting across the individual components. (An open path has to be in both the 100 mV, 1 V, 10 V and 100 V, 1000 V circuit paths to show up as a floating reading in all ranges.)

8-C-26. Inaccurate Reading. This failure can be caused by leaky FETs in either the Upper or Lower Input Node or a defective gate Bias Amplifier. A FET which is leaky from its gate (when turned off) to its drain (connected to the Input Node), can cause a low reading. If that is the case, connect the source (input) of the FET to the input of the 3456A and then turning the FET on (gate to ground). If the reading is then correct, the FET is leaky. To determine a leaky FET and a defective Gate Bias Amplifier, do the following:

a. Press the 3456A's RESET button.

b. Set the instrument to either the 100 mV (or 1 V) Range, and the 6 Digit Mode (by storing "6" into the N DIG DISP Register).

c. Apply a stable and accurate 100 mV (or 1 V) to the VOLTS Input Terminals. If an accurate voltage is not available, use one of which the exact value is known.

d. If the 3456A is inaccurate in the positive direction (high reading), do the following:

1. Measure the voltage at A20TP104. If the voltage is higher (more than 500 mV) than the input voltage, replace A20Q120, U105.
2. If the voltage at TP104 is close to the input voltage (within 100 mV), short the High VOLTS Terminal to the gate (pin 3) of Q120. If the reading on the 3456A is now good, replace Q120. If still inaccurate, replace Q103.

e. If the reading is inaccurate in the negative direction (low reading), remove the voltage from the 3456A Input Terminals.

f. Short the VOLTS Input Terminals and note the displayed reading.

g. If the 3456A displays a negative offset, do the following:

1. Turn Autozero Off.
2. Short the gate of A20Q104 to the Low VOLTS Input Terminal and note the displayed reading. If the offset reading changes in the positive direction (> 200 counts) or to approximately zero (< 50 counts), replace Q104. Remove the short from Q104.

3. If the reading is still wrong, turn Autozero On.
4. Short the gate of Q115 to the Low VOLTS Input Terminal and note the reading. If the offset reading changes in the positive direction (> 200 counts) or to approximately zero (< 50 counts), replace Q115. Remove the short from the FET.
5. If the offset reading is still excessive, short both the gate and source (junction of Q110 and R111) of Q110 to the Low VOLTS Input Terminal. If the offset reading changes in the positive direction (> 200 counts) or to approximately zero (<50 counts), replace Q110. Remove the short from Q110.
6. Remove the short from the VOLTS Input Terminals and apply a stable and accurate 100 mV (or 1 V) to the terminals.
7. Turn Autozero Off.
8. Short the gate of Q105 to the High VOLTS Input Terminal. If the reading is good, replace Q105. If not, replace Q102, Q112.

h. If the 3456A displays very little (< 50 counts) or no offset, do the following:

1. Turn Autozero Off.
2. Remove the short from the VOLTS Input Terminals and apply a stable and accurate 100 mV (or 1 V) to the VOLTS Input Terminals.
3. Short the source of A20Q104 (junction of Q104 and R104) to the High VOLTS Input Terminal.
4. If the displayed reading is now good, replace Q104. If not, remove the short from Q104 and short across R104.
5. If the reading is now good, replace Q102. If not, replace Q104.

8-C-27. Noisy Reading. Noisy Readings can be caused by FETs in either the Upper (source of Q103) or Lower (drain of Q103) Input Node. If the Noisy Readings also show up as Inaccurate Readings, the noise is most likely caused by leaky FETs. Go to Paragraph 8-C-26 (Inaccurate Readings) for troubleshooting. If the readings are accurate, do the following:

a. Press the 3456A's RESET button.

b. Set the instrument to the 10 V Range and the 6 Digit Mode (by storing "6" into the N DIG DISP Register).

c. Apply a stable 10 V dc to the VOLTS Input Terminals.

d. Turn Autozero Off.

e. If the displayed reading is stable replace A20Q104.

f. If still unstable, replace Q103.

8-C-28. Some Ranges Inoperative.

8-C-29. This failure can be a Zero, Overload (OL), or Inaccurate (High or Low) Reading on some ranges. The faulty component can often be determined by what ranges rail and how they fail. The following are the failures and troubleshooting information.

8-C-30. Zero Reading. A zero reading on some ranges is normally caused by a short to ground. To troubleshoot the failure, determine what ranges fail. If the 100 mV, 1 V, and 10 V Ranges fail, make sure there is no short to ground on the source side of A20Q116 (junction of Q116 and R120). If the 100 V and 1000 V Ranges fail, make sure there is no short on the source side of Q109 (junction of Q109 and U200).

8-C-31. Overload Reading. This failure is noted when a high level voltage (> ± 12 V) is measured. This is normally caused by shorted or very leaky FETs. To troubleshoot Overload Failures on some ranges, do the following:

a. Determine what ranges fail.

b. If only the 100 mV, 1 V, and 10 V Ranges fail, do the following:

1. Press the 3456A's RESET button.
2. Set the 3456A to the 1 V Range.
3. Short the 3456A's VOLTS Input Terminals.
4. With a high impedance Digital Voltmeter (like the 3456A) measure the source of A20Q116 (junction of Q116 and R120).
5. If the voltage is approximately zero, check for a leaky Q109.
6. If the voltage is positive (>12 V), replace Q119.
7. If the voltage is negative (> −12 V), turn the Filter On (by pressing the FILTER button).
8. If the voltage changes to approximately zero, replace Q114. If not, connect the gate of Q109 to the Low VOLTS Terminal.
9. If the voltage changes to approximately zero, replace Q109. If not, replace Q118.

c. If only the 100 V and 1000 V Ranges fail, turn the Filter On (by pressing the FILTER button). If the overload condition disappears, replace A20Q101. If not, replace Q116.

8-C-32. Floating Reading. A floating reading is when a reading is displayed and changes very little or not at all when an input (different from the reading) is applied to the 3456A. This may also show up as an overload condition on the lower ragnes (100 mV and 1 V Ranges). Check and do the following:

a. Determine what ranges fail.

b. If the 100 mV, 1 V, and 10 V Ranges fail, the failure is an open in the low voltage input circuitry (A20K103, Q116, and associated circuitry). To determine the faulty component short across K103, source to gate of Q116, and resistors R102, R109, R110, R120. Replace the faulty component.

c. If the 100 V and 1000 V Ranges fail, the failure is an open in the high voltage input circuitry (A20K102, U200, and Q109). To determine if K102 or Q109 is open, short across each one (source to drain of Q109).

To determine an open U200, measure for the correct value resistor between pins 1 and 2, and 1 and 25 on U200.

8-C-33. Inaccurate Reading. This failure is normally caused by defective FETs in either the low or high voltage input circuitry, depending on what ranges fail. Do the following:

a. Press the 3456A's RESET button.

b. Determine what ranges fail.

c. If the 100 mV, 1 V, and 10 V Ranges are inaccurate, set the 3456A to the 10 V Range and apply an accurate and stable 10 V dc to the VOLTS Input Terminals. If an accurate 10 V is not available, use one of which the exact value is known. Then do the following:

1. If the displayed reading is high, A20Q119 may be leaky.
2. If the reading is low, turn on the Filter (by pressing the FILTER button). Replace Q114 if the reading is now good.
3. If the reading is still low, remove the 10 V from the input and short the Input Terminals.
4. Connect the gate of Q109 to the Low VOLTS Input Terminal.
5. Using a high impedance Digital Voltmeter (like the 3456A), measure the voltage at the junction of the source of Q116, gate of Q119 and source and drain of Q118.
6. If the voltage is approximately zero ($< \pm 10\ \mu V$), replace Q109. If not, replace Q118.

d. If the 100 V and 1000 V Ranges are inaccurate, set the 3456A to the 100 V Range and apply an accurate and stable +100 V dc to the VOLTS Input Terminals. If an accurate 100 V is not available, use one of which the exact value is known. Then do the following:

1. If the displayed reading is high, make sure A20U200 is good. This can be done by measuring pin 1 of U200 with a high impedance Digital Voltmeter (like the 3456A). With an accurate 100 V input the voltage should be an accurate 1 V.
2. If the reading is low, turn on the Filter (by pressing the FILTER button).
3. If the reading is now good, replace Q101.
4. If the reading is still wrong, replace Q116.

8-C-34. Noisy Reading. This failure is normally caused by defective FETs in either the low or high voltage input circuitry, depending on what ranges fail. Do the following:

a. Press the 3456A's RESET button.

b. Determine what ranges fail.

c. If the 100 mV, 1 V, and 10 V Ranges are noisy, set the 3456A to the 10 V Range and apply a stable 10 V dc to the VOLTS Input Terminals. Then do the following:

1. Short the high input (High VOLTS Terminal) to the source of A20Q116 (junction of Q116, Q119, Q118, and R120).
2. If the reading is now stable, relay K103 or resistors R102, R109, R110, and R120 may be noisy. The noisy component can be determined by shorting across the resistors. Replace the component that makes the reading good, when shorted. If the resistors are good, replace K103.
3. If the reading is still noisy, measure the voltage at the source of A20Q116 (junction of Q116, Q119, Q118, and R120) using a high impedance Digital Voltmeter (like the 3456A).
4. If the reading on the Test Voltmeter is noisy, replace Q118 and Q119.
5. If the reading on the Test Voltmeter is good, try replacing Q116.

d. If the 100 V and 1000 V Ranges are noisy, set the 3456A to the 100 V Range and apply a stable 100 V dc to the VOLTS Input Terminals. Then do the following:

1. Using a high impedance Digital Voltmeter (like the 3456A), measure the voltage at the source of A20Q109 (pin 1 of U200).
2. If the voltage is stable, replace Q109.
3. If the voltage is noisy, replace K102 or U200.

8-C-35. INPUT AMPLIFIER TROUBLESHOOTING.

8-C-36. General.

8-C-37. Before troubleshooting the Input Amplifier, make sure the failure is not in the Input Switching Circuitry. Refer to Paragraph 8-C-8 and 8-C-15 to determine the faulty circuitry.

8-C-38. Failures caused by the Input Amplifier can be Inaccurate, Zero, Overload (OL), and Noisy Readings. The failures can be caused by the Gate Bias Amplifier, Feedback FETs and Resistors, and the Input Amplifier itself. The following paragraphs have the failures and troubleshooting information.

NOTE

The Offset Adjustment of the Input Amplifier has to be readjusted, if a component in the amplifier has been replaced.

8-C-39. All Ranges Inoperative.

8-C-40. Use the following procedure to find and troubleshoot the faulty area.

a. Press the 3456A's RESET button.

b. Set the instrument to the Ohms Function and measure a 100 K ohm or higher value resistor. If the

100 K ohm and higher Ranges also fail, continue with the next step. If the 100 K ohm and higher Ranges are good, check the following:

1. Make sure A20Q306 and Q304 are not shorted (source to drain).
2. Make sure the Range and Function Control Logic turns Q306 and Q304 off (gate at −18 V) in the DCV Function.

c. Determine the failure by doing the following:

1. Set the 3456A to the DCV Function and the 10 V Range.
2. Apply a stable and accurate +10 V dc to the VOLTS Input Terminals. If an accurate 10 V is not available, use one of which the exact value is known.

d. If the failure is an Overload (OL) on all ranges, the Input Amplifier itself is at fault. Go to Paragraph 8-C-47 for troubleshooting.

e. If the failure is a Zero Reading on all ranges, the Input Amplifier itself or the Gate Bias Amplifier is at fault. To determine if the Gate Bias is at fault, do the following:

1. Using a high impedance Digital Voltmeter (like the 3456A), measure the voltage at the gate of A20Q305 (pin 6) and TP304.
2. If both readings are the same (within 5 mV), the Input Amplifier is at fault. Go to Paragraph 8-C-47 for troubleshooting.
3. If the reading is not the same (> 5 mV), the Gate Bias Amplifier is at fault. Go to Paragraph 8-C-45 for troubleshooting.

f. If the reading is a High (positive) Reading on all ranges, the most likely cause is a leaky A20Q310 and/or Q305.

g. If the failure is a Noisy Reading, the most likely cause is the Input Amplifier itself. Go to Paragraph 8-C-47 for troubleshooting.

8-C-41. Some Ranges Inoperative.

8-C-42. The Input Amplifier is in certain gain configurations for the various ranges (e.g. X10 gain for the 1 V and 100 V Ranges). Feedback FETs in conjunction with Feedback Resistors (A20U200) are used to set the gains.

8-C-43. Failures caused by the Feedback FETs show up as Overload, Zero, Inaccurate (High or Low), or Noisy Readings on some ranges. The failures can be caused by Open, Shorted, or Leaky FETs. An open FET normally shows one or two inoperative ranges. The FET can easily be determined by what range(s) fail. A doublecheck can be by shorting the source to drain of the suspected defective FET. The range(s) should then be good. A shorted or leaky FET normally shows up as only one or two good ranges. Remember, the Range and Function Control Logic turns a FET On and Off (−18 V is Off and Gate Bias Voltage is On). Make sure the logic is good, before replacing a suspected open or shorted FET.

8-C-44. The Feedback Resistors will normally show up as inaccuracy on some ranges. They can also show up as an Overload or Zero Reading, if they are open. Since the failure symptoms are similar to open FETs, first determine if the FET used on the failing range is open by shorting its source to drain. If the range is then good, the FET is open. If not, the Feedback Resistor used for the failing range is defective. The following are the defective and good ranges and most likely cause.

a. Only the 10 V and 1000 V Ranges fail. These ranges use the X1 gain of the amplifier. The gain is determined by A20Q308. Make sure the FET is on and not noisy (by shorting its source to drain), when either range is selected.

b. Only the 1 V and 100 V Ranges fail. These Ranges use the X10 gain of the amplifier. The gain is determined by A20Q307 and U200. Make sure the FET is on and not noisy (by shorting its source to drain), when either range is selected. Also make sure U200 is good and Q303 is on.

c. Only the 100 mV Range fails. This range uses the X100 gain of the amplifier. The gain is determined by A20Q309 and U200. Make sure the FET is on and not noisy (by shorting its source to drain), when the range is selected. Also make sure U200 is good and Q302 is on.

d. Only the 10 V and 1000 V Ranges good. Make sure A20Q308 is not shorted or very leaky, when other than the 10 V and 1000 V Ranges are selected.

e. Only the 1 V and 100 V Ranges good. Make sure A20Q308 and Q303 are not shorted or very leaky, when other than the 1 V and 100 V Ranges are selected.

f. Only the 100 mV Range good. Make sure A20Q309 and Q302 are not shorted or very leaky, when other than the 100 mV Range is selected.

8-C-45. Gate Bias Amplifier.

8-C-46. The Gate Bias Amplifier is a X1 gain amplifier. This should make its input the same (within 5 mV) as its output. To check the operation, apply +5 V (+5 V Power Supply) to the input (pin 6 of A20Q305). If the output (A20TP304) is +5 V (within 5 mV of the input), the amplifier is good. If the voltage is incorrect, replace A20U305, Q305, or CR306.

8-C-47. Input Amplifier.

8-C-48. The failures in the Input Amplifier normally shows up as an oscillating, saturated, or noisy output. Oscillation can be caused by a defective Integrator Amp (A20U308) and associated circuitry, and the Compensating Network (includes FETs Q302, Q303, and Q304). A saturated or noisy Input Amplifier can be caused by

the Dual FET Stages (A20Q310 and Q311), Op Amp (U307), Integrator Amp (U308), and the Feedback FETs (Q306 to Q309). To determine the failure, do the following:

a. Press the 3456A's RESET button.

b. Remove the cable from A20J19 and connect it to TP102.

c. Connect an oscilloscope to TP303 and look for oscillation on all ranges (the signal at TP303 should close to 0 V).

d. If oscillation is present, go to Paragraph 8-C-50 for troubleshooting.

e. If no oscillation is present, remove the oscilloscope and connect a high impedance Digital Voltmeter (like the 3456A) to TP303.

f. Set the 3456A to the 10 V Range and measure the voltage at TP303.

g. If the voltage is noisy (> 10 μV), go to Paragraph 8-C-51 for troubleshooting.

h. If the voltage shows a saturated output (> ± 14 V), go to the next paragraph for troubleshooting.

8-C-49. Saturated Output. This failure can be caused by an open Feedback or a defective component in the amplifier circuitry. Do the following:

a. Press the 3456A's RESET button.

b. Set the instrument to the 10 V Range.

c. Remove the cable from A20J19and connect it to TP102, if it has not been done already.

d. Using a clip lead, connect the output of the amplifier (junction of A20U308 pin 6, cathode of CR304, and anode of CR305) to the gate of Q310 (pin 6).

e. If the amplifier output at TP303 is approximately zero (>20 mV), Feedback FET Q308 is open. Make sure the FET is turned on by the Range and Function Control Logic. If all the ranges have an open Feedback FET, the logic is most likely at fault.

f. If the amplifier output at TP303 is still saturated, turn the 3456A Off.

g. Unsolder and lift one side of R327 from the P.C. Board, as shown below.

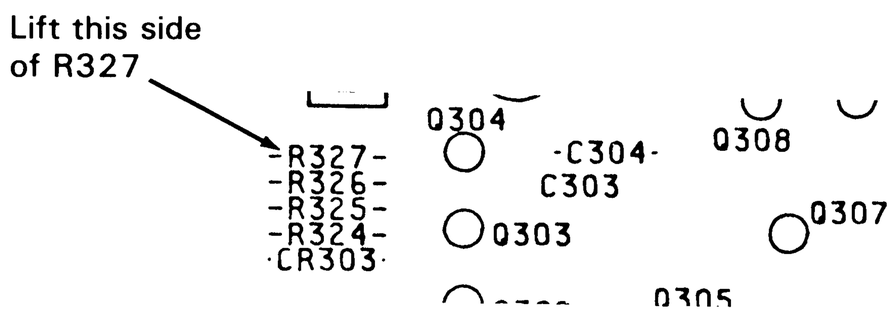

h. Connect the gate of Q308 to A20TP105.

i. Turn the 3456A On.

j. Using a clip lead, carefully short pin 6 of Q310 to ground.

CAUTION

Make sure the clip lead does not touch any other pins on Q310 or other components on the P.C. Board, or internal damage to the 3456A may result.

k. Using a high impedance Digital Voltmeter (like the 3456A), measure the voltage at U307 pin 6. The voltage should read approximately +5 V. (Potentiometer R334 may have to be readjusted to measure the correct voltage.)

l. If the voltage is good, the Dual FETs and the Op Amp are working correctly. Replace U308 and then resolder R327.

m. If the voltage is wrong, measure the voltage at U307, pins 2 and 3. The voltage on the pins should be approximately the same and range from +20 V to +25 V. If the voltage is good, replace U307 and/or its associated circuitry. If wrong, try Q310, Q311, U302, and their associated circuitry. Resolder R327. (Readjust R334 using the Input Amplifier Offset Adjustment Procedure in Service Group F, if any of the components have been replaced.)

8-C-50. Oscillating Output. An Oscillating Output is normally caused by A20U308 and associated circuitry. Make sure the feedback capacitor, C303, and compensating capacitor, C304, are good. They can easily be checked by connecting another capacitor with the same value in parallel with the suspected defective capacitor. If the oscillation remains, try replacing U308. If that does not eliminate the oscillation, perform the troubleshooting procedure for a saturated output (in Paragraph 8-C-49).

8-C-51. Noisy Output. To determine the faulty circuitry, do the following:

a. Press the 3456A's RESET button.

b. Remove the cable from A20J19 and connect it to TP102, if it has not been done already.

c. Using a clip lead, carefully connect the gate (pin 6) of A20Q310 to TP102 (or the gate, pin 3, of the other FET in the same package).

d. Using a high impedance Digital Voltmeter (like the 3456A), measure the voltages at pins 2 and 3 of A20U307. The voltage should be quiet and steady (<1 mV change). (The voltage may have a slow drift, if the 3456A has only been on for a short time).

e. If the voltage is noisy, A20Q310, Q311, and associated circuitry is noisy.

f. If the voltage is steady and quiet, measure the voltage at pin 6 of U307. The voltage should be a solid 5 V (<50 μV change). If good, replace U308. If noisy, replace U307.

8-C-52. RATIO FAILURE.

8-C-53. A Ratio measurement is a multiple measurement which uses the DCV and ACV measurement circuitry (dependent on the selected Ratio Function). Because of this, make sure both functions are working correctly, before troubleshooting any Ratio Failures. Go to this Service Group for any DCV Failures and Service Group E for any ACV Failures.

8-C-54. If the DCV and ACV Functions are good, the only other components that can cause an inoperative Ratio, are some of the Input Switching FETs. Since the FETs used in Ratio are also used in the 4-WRΩ Function, make sure the function is good. Do the following:

a. Press the 3456A's RESET button.

b. Set the instrument to the 4-WRΩ Function and the 1 K ohm Range.

c. Connect an accurate (± .001%) 1000 ohm resistor to the Input Terminals (VOLTS and 4WRΩ SENSE). If an accurate resistor is not available, use one of which the exact value is known.

d. If the Ohms Function fails, go to Service Group D for troubleshooting.

e. If the Ohms Function is good, replace A20Q115, Q116.

8-C-55. ANALOG FILTER FAILURE.

8-C-56. To determine if the Analog Filter fails, do the following:

a. If the Analog Filter is inoperative in only the 100 mV, 1 V, and 10 V Ranges, make sure A20Q114 is on (when the Filter is on).

b. If the Filter is inoperative in only the 100 and 1000 V Ranges, make sure Q101 is on (when the Filter is on).

c. If the Filter is inoperative in all Ranges, press the 3456A's RESET button.

d. Set the instrument to the 1 V Range.

e. Apply a 1 V at 50 Hz Sine Wave to the VOLTS Input Terminals.

f. Connect the low input of an AC Voltmeter to the 3456A's High Input Terminal and the low input of the meter to the source of A20Q116 (junction of Q116, Q118, and Q119).

g. If the reading on the Test Voltmeter is approximately 1 V ac (RMS), the Analog Filter is working correctly.

h. If not, make sure Q121 and Q111 are off, when the Filter is on. Also make sure capacitor C105, C106, and C107 are not shorted or open. Use an ohmmeter to check for shorts. An open capacitor can be checked by connecting the same value capacitor across the suspected open capacitor, while monitoring the ac voltage across R101, R109, K103, R110, and R120. Replace U105 if everything appears good.

SERVICE GROUP D

Service Group D Contents

Title	Paragraph
General	8-D-1
Pre-Troubleshooting Information	8-D-4
Ohms Tables	8-D-6
Inoperative Ohms Ranges	8-D-8
Ohms Accuracy Failures	8-D-10
Ohms Noise	8-D-12
2-WRΩ and 4-WRΩ Troubleshooting	8-D-15
General	8-D-16
All Ranges Inoperative (Overload, Zero, Reading, Accuracy, and Noise)	8-D-18
Some Ranges Inoperative	8-D-20
Isolating the Ohms Circuitry	8-D-23
Input Switching Troubleshooting	8-D-25
Ohms Protection Circuitry Troubleshooting	8-D-28
Input Amplifier Troubleshooting	8-D-31
Ohms Current Source Troubleshooting	8-D-34
All Ranges Inoperative (Overload, Zero Reading, Accuracy, and Noise)	8-D-37
Zero Reading and Noise on some Ranges	8-D-39
Overload Readings on some Ranges	8-D-41
High or Low Readings on some Ranges	8-D-43
4-WRΩ Troubleshooting	8-D-46
General	8-D-47
Constant Overload, or High Positive or Negative Readings	8-D-51
4-WRΩ Accuracy Failures	8-D-53
4-WRΩ Noise Failures	8-D-55
O.C. Ohms Failure	8-D-57

SERVICE GROUP D

8-D-1. GENERAL.

8-D-2. This Service Group has Ohms troubleshooting information for the 3456A. You must make sure the 3456A is functioning correctly in the standard DCV Function, before troubleshooting for any Ohms Malfunctions. (Go to Service Group C if the DCV Function fails.)

8-D-3. The Service Group is symptoms oriented (what fails) with two major levels of troubleshooting. The first level uses procedures to determine which area in the 3456A causes the ohms failure. The second level has information to troubleshoot the faulty area.

NOTE

The ground used in troubleshooting the Ohms Section of the 3456A is the Inguard Ground #1 (A20TP101).

8-D-4. PRE-TROUBLESHOOTING INFORMATION.

8-D-5. Various Switching FETs are used in Ohms. The FETs are normally switched On and Off by Comparators. The Comparators are controlled by the Range and Function Control Logic which in turn is controlled by the Inguard Logic. Make sure the logic is correct, before replacing any bad FETs.

8-D-6. OHMS TABLES.

8-D-7. Table 8-D-1 shows the various Ohms Currents, Input Amplifier Gains, and Closed Switches in the different Ohms Ranges. Table 8-D-2 gives the Switch Closure Commands for the 3456A's Ohms Function and Ranges. Use both tables as troubleshooting aids to determine which Switches (FET and Relay) and gains are used for certain Ohms Ranges.

Table 8-D-1. Ohms Gain and Currents.

Range	Reference Voltage	FETs Used	Current	Input Amp Gain
100	−5.5	Q201,Q204,Q206,Q209	1mA	X100
1 K	−5.5	Q201,Q204,Q206,Q209	1mA	X10
10 K	−5.5	Q201,Q204,Q206,Q208	100μA	X10
100 K	−9.25	Q202,Q204,Q206,Q208	50μA	X2
1 M	−9.25	Q202,Q204,Q205,Q206	5μA	X2
≥10 M	−9.25	Q202,Q203	500nA	X2

8-D-8. INOPERATIVE OHMS RANGES.

8-D-9. Most Range Failures show up in both the 2-WRΩ and 4-WRΩ Function. Troubleshoot the 3456A in the 2-WRΩ Function for any Range Failures. If failures are noted in *only* the 4-WRΩ Function, go to Paragraph 8-D-46 for troubleshooting. For the 2-WRΩ Function, go to Paragraph 8-D-15 for troubleshooting.

8-D-10. OHMS ACCURACY FAILURES.

8-D-11. Ohms Accuracy Failures can be in either the 4-WRΩ, or both the 4-WRΩ and 2-WRΩ Functions. If the failure shows up equally in both functions, use the troubleshooting information in Paragraph 8-D-15. If the failure shows up in only the 4-WRΩ Function or is quite a bit worse (more than X100), use the troubleshooting information in Paragraph 8-D-46. One thing to remember is that the lower ranges (10 K ohm and below) should read higher in the 2-WRΩ Function. This is because some internal resistance is included in the measurement. To calculate the correct reading, short across the resistor being measured and subtract that reading from the resistor reading.

8-A-12. OHMS NOISE.

8-D-13. Make sure the DCV Function is not noisy. If the function is noisy, troubleshoot for DCV Noise before troubleshooting for any Ohms Noise (go to Service Group C).

8-D-14. Most Ohms Noise normally shows up in both the 4-WRΩ and 2-WRΩ Function. This can be caused by the Ohms Current Source or the Ohms Protection Circuitry. Go to Paragraph 8-D-15 for troubleshooting. Noise in only the 4-WRΩ Function is usually caused by the Input Switching Circuitry. Go to Paragraph 8-D-46 for troubleshooting.

8-D-15. 2-WRΩ AND 4-WRΩ TROUBLESHOOTING.

8-D-16. General.

8-D-17. The following information can be used to troubleshoot the 3456A for any Inoperative Ohms Ranges, Ohms Accuracy, and Ohms Noise Failures.

8-D-18. All Ranges Inoperative (Overload, Zero Reading, Accuracy, and Noise).

Table 8-D-2. Ohms Switch Closure Commands.

Function	Range	Switch Closure Commands					
		H4WH HDH LTS7 HDL	LGS HAM HAL HAC	HACV HOHM HDCH HDCL	HACD LDE HL HM	HA1 HA2 HA10 HA100	H1 H2 H3 H4
2-WRΩ	100	0011	0000	0101	0011	0001	0001
2-WRΩ	1 K	0011	0010	0101	0011	0010	0001
2-WRΩ	10 K	0011	0010	0101	0001	0010	0010
2-WRΩ	100 K	0011	0100	0101	0001	0100	0010
2-WRΩ	1 M	0011	0100	0101	0010	0100	0100
2-WRΩ	10 M	0011	0100	0101	0000	0100	1000
2-WRΩ	≥ 100 M	0011	0100	0111	0000	0100	1000
4-WRΩ	100	1010	1000	0100	0011	0001	0001
4-WRΩ	1 K	1010	1010	0100	0011	0001	0001
4-WRΩ	10 K	1010	1010	0100	0001	0010	0010
4-WRΩ	100 K	1010	1100	0100	0001	0100	0010
4-WRΩ	1 M	1010	1100	0100	0010	0100	0100
4-WRΩ	10 M	1010	1100	0100	0000	0100	1000
4-WRΩ	≥ 100 M	1010	1100	0110	0000	0100	1000
O.C. 2-WRΩ	100	0011	0000	0101	0TT1	0001	00TT
O.C. 2-WRΩ	1 K	0011	0010	0101	0TT1	0010	00TT
O.C. 2-WRΩ	10 K	0011	0010	0101	0T01	0010	00T0
O.C. 2-WRΩ	100 K	0011	0100	0101	0T01	0100	00T0
O.C. 4-WRΩ	100	1010	1010	0100	0TT1	0001	00TT
O.C. 4-WRΩ	1 K	1010	1010	0100	0TT1	0010	00TT
O.C. 4-WRΩ	10 K	1010	1010	0100	0T01	0010	00T0
O.C. 4-WRΩ	100 K	1010	1010	0100	0T01	0100	00T0

Note: 1 = High, 0 = Low, T = Toggle

8-D-19. This failure can show up as a constant Overload (OL), Zero Reading, Noise, or Inaccuracy on all ranges. A failure can be caused by the 3456A Input Circuitry, Ohms Protection Circuitry, or Ohms Current Source. A constant overload is normally caused when the Current Source is producing a current which is too large. A zero reading normally shows an open in the ohms current path. Inaccuracy can be caused by leakage in the ohms current path or by wrong current values. Noise is normally caused by the Ohms Protection Circuitry or Ohms Current Source. To isolate the defective circuitry, do the following:

a. Press the RESET button on the 3456A.

b. Connect a very accurate (± .001%) 100 K ohm resistor at the VOLTS (2WRΩ, 4WRΩ) Input Terminals. If an accurate resistor is not available, use one of which the exact value is known.

c. Set the instrument to the 2-WRΩ Function, 100 K ohm Range, and 6 Digit Mode (by storing "6" into the N DIG DISP Register).

d. If the reading of the 3456A is zero ("00.0000") or noisy (resistor reading unstable), the Ohms Input Relay (A20K101), Ohms Protection Circuitry, or Ohms Current Source is at fault. For further isolation, do the following:

1. Connect one end of a clip lead to the Ohms Input at A20K101 (red wire connected to K101). Connect the other end to the emitter of A20Q210.
2. If the ohms reading is good, K101 or the Ohms Protection Circuitry is at fault. Go to Paragraph 8-D-28 for further troubleshooting.
3. If the reading is still "00.0000" of noisy, the Ohms Current Source is at fault. Go to Paragraph 8-D-34 for troubleshooting.

e. If the reading is an Overload (OL), the Ohms Current Source is at fault. Go to Paragraph 8-D-34 for troubleshooting.

f. If the reading is High (accuracy), the failure is in the Ohms Current Source. Go to Paragraph 8-D-34 for troubleshooting.

g. If the reading is not zero or the resistor value and appears to be jumpy (like a floating reading), the DCV Input Switching is at fault. This type of failure should

also show up as an inoperative DCV Function. Go to Service Group C for troubleshooting.

h. If the reading is Low (accuracy), the failure can be in the Ohms Current Source, Input Circuitry, Input Amplifier, or the Ohms Protection Circuitry. To isolate the defective area, do the following:

1. Turn the 3456A's Autozero Off.
2. Turn A20K101 Off by shorting the base of A20Q702 to ground. (Q702 is located in the Range and Function Control Logic.)
3. Remove the red wire from A20J20 and the white wire from J19.
4. Using a clip lead, connect the removed red wire to the base of A20Q310 (pin 3). (Q310 is in the Input Amplifier Circuitry.)
5. Using another clip lead, connect the emitter of A20Q210 to the base of Q310.
6. If the reading is good or improves significantly (good within 20 cts), the Input Switching Circuitry is at fault. Go to Paragraph 8-D-25 for troubleshooting.
7. If the reading is still wrong, acquire a 5 V dc Power Supply and apply −5 V to the base of Q210.
8. If the reading is good or improves significantly (good within 20 cts), the Ohms Protection Circuitry is at fault. Go to Paragraph 8-D-28 for troubleshooting.
9. If the reading is still wrong, remove both clip leads from the base of Q310. Connect the removed leads to either side of A20R103.
10. Connect a high input impedance Digital Voltmeter (like the 3456A) to either side of R103 and ground. Measure and note the voltage at R103. The voltage should be very close to −5 V, if the recommended 100 K ohm test resistor is used.
11. Reconnect the white wire to J19. If the reading of the test voltmeter changes to a lower value (less negative), the Input Amplifier is at fault. Most likely a leakly Q310. If the reading remains the same, the Ohms Current Source is at fault. Go to Paragraph 8-D-34 for troubleshooting.

8-D-20. Some Ranges Inoperative.

8-D-21. This failure can show up as a constant Overload (OL), Zero Reading, or Inaccuracy on some ranges. A failure can be caused by the 3456A Input Switching, Input Amplifier, Ohms Protection Circuitry, or the Ohms Current Source. The following symptoms can be used to help isolate the faulty area.

a. If a group of ranges fail, the cause is most likely in the Ohms Current Source or Input Amplifier. For example, the 100, 1 K, and 10 K ohm Ranges fail (low or zero ohms reading). In this case, the faulty ranges all depend on the −5.5 V Reference Voltage (in the Ohms Current source) for current. The most likely cause is an open A20Q201. The following is a listing of the ranges, and the faulty circuitry. For a defective Input Amplifier, go to Paragraph 8-D-31 for troubleshooting. For a defective Ohms Current Source, go to Paragraph 8-D-34 for troubleshooting.

Only Ranges Fail	Cause
100	Input Amplifier
100,1K	Current Source
100,1K,10K	Current Source
1K,10K	Input Amplifier
10K,100K	Current Source
100K	Current Source
100K through 1G	Input Amplifier, Current Source
10M through 1G	Current Source

Only Ranges Good	Cause
100	Input Amplifier
100,10K	Input Amplifier
100K through 1G	Input Amplifier

b. A low reading on a range which gets progressively worse on higher ranges is normally caused by leakage to ground. Leakage can be caused by the 3456A Input Switching Circuitry, Input Amplifier, Ohms Protection Circuitry, and/or the Ohms Current Source. If this type of failure is noted, go to Paragraph 8-D-23 to determine the faulty circuitry.

8-D-22. Since a faulty circuitry can often be isolated by the failing ranges, one other thing should be kept in mind. Sometimes a range may appear good, but is in actuality bad. For example, the 1 M through 1 G ohm Ranges show low readings. However, the 100 K ohm Range may also be low. This may not show if the error causing the low reading has been adjusted out by Calibration Pot H. It is sometimes possible to adjust an inaccurate range to tolerance.

8-D-23. Isolating the Ohms Circuitry.

8-D-24. To isolate the faulty circuitry causing Ohms Range Failures due to leakage, do the following:

a. Press the RESET button on the 3456A.

b. Acquire an accurate resistor with the same value as the defective ohms range (e.g. 100 K ohm resistor for a bad 100 K ohm Range). It is best to use a resistor value that corresponds to the worst range. If an accurate resistor is not available, use one of which the exact value is known.

c. Connect the resistor at the VOLTS (2WRΩ, 4WRΩ) Input Terminals.

d. Set the instrument to the 2-WRΩ Function, the defective Range, and the 6 Digit Mode (by storing "6" into the N DIG DISP Register).

e. Turn the 3456A's Autozero Off.

f. Turn A20K101 Off by shorting the base of A20Q702 to ground. (Q702 is located in the Range and Function Control Logic.)

g. Remove the red wire from A20J20 and the white wire from J19.

h. Using a clip lead, connect the removed red wire to the base of A20Q310 (pin 3). (Q310 is in the Input Amplifier Circuitry.)

i. Using another clip lead, connect the emitter of A20Q210 to the bas of Q310.

j. If the ohms reading is good or improves significantly (good within 20 cts), the Input Switching Circuitry is at fault. Go to Paragraph 8-D-25 for troubleshooting.

k. If the reading is still bad, acquire a 5 V dc Power Supply and apply −5 V to the base of Q210.

l. If the reading is good or improves significantly (good within 20 cts), the Ohms Protection Circuitry is at fault. Go to Paragraph 8-D-28 for troubleshooting.

m. If the reading is still bad, remove both clip leads from the base of Q310. Connect the removed leads to either side of A20R103.

n. Connect a high input impedance Digital Voltmeter (like the 3456A) to either side of R103 and ground. Measure and note the voltage at R103.

o. Reconnect the white wire to J19. If the reading of the test voltmeter changes to a lower value (less negative), the Input Amplifier is at fault. Most likely a leaky Q310. If the reading remains the same, the Ohms Current Source is at fault. Go to Paragraph 8-D-34 for troubleshooting.

8-D-25. INPUT SWITCHING TROUBLESHOOTING.

8-D-26. Most Ohms Failures caused by the Input Switching Circuitry should also show up in the DCV Function. Make sure the function is good, before troubleshooting for any Ohms Failures. Go to Service Group C, if the DCV Function is bad.

8-D-27. The Ohms Failures caused by the Input Switching is normally leakage to ground. This failure shows up as a low reading on a range with the higher ranges worse (lower reading). Only a few components in the Input Switching can cause leakage without affecting the DCV Function. To isolate the components, do the following:

a. Unsolder and lift one side of E1. (E1 is located at the A40 Assembly on the bottom of the chassis.)

b. If the defective ohms range is now good, replace E1. If not, unsolder and lift one side of A20R101.

c. If the range is now good, replace A20K102. If not, replace K101.

8-D-28. OHMS PROTECTION CIRCUITRY TROUBLESHOOTING.

8-D-29. Use the following troubleshooting information if it has previously been determined that the Ohms Protection Circuitry is at fault. (The procedures to determine if this or other circuits are at fault are in Paragraphs 8-D-18 and 8-D-20.)

8-D-30. the Ohms Protection Circuitry can cause Ohms Failures due to leakage to ground, an open Protection Circuitry, and noisy readings. Leakage to ground shows up as a low reading on a range with the higher ranges worse (lower reading). An open Protection Circuitry shows up as a zero reading. Troubleshoot the Protection Circuitry using the following information.

a. Leakage. Only three components in the Ohms Protection Circuitry can cause this failure. Do the following:

1. Unsolder and lift one side of A20CR201.
2. If the defective ohms range is now good, replace CR201. If not, unsolder and lift E201.
3. If the range is now good, replace E201. If not, replace K101.

b. Open Circuit or Noise. Isolating the defective component(s) in the Ohms Protection Circuitry can be done by collectively shorting across the individual components. Do the following:

1. Connect one end of a clip lead to the Ohms Input at A20K101 (red wire connected to K101).
2. Connect the other end of the clip lead to the other side of K101. If the ohms failure was noise and the reading is now good, replace K101. If the ohms failure was a zero reading and is now good, K101 and/or its associated circuitry can be bad. Make sure the relay is being turned on by Q702. If not, check for the correct logic level. A bad U702 and/or the Inguard Logic can cause a wrong logic level. Go to Service Group B if the Inguard Logic is suspected.
3. If the reading is still wrong, remove the clip lead from the output of K101. (The output of the relay is the lead opposite the one connected to the red wire.)
4. Connect the removed lead to the cathode of CR202. If the reading is good, CR202 or R222 is open or noisy.
5. If the reading is still wrong, check for an open or noisy Q201 and Q211.

8-D-31. INPUT AMPLIFIER TROUBLESHOOTING.

8-D-32. Use the following troubleshooting information if it has previously been determined that the Input Amplifier is at fault. (The procedures to determine if this or other circuits are at fault are in Paragraph 8-D-18 and 8-D-20.)

8-D-33. Ohms Failures caused by the Input Amplifier can be defective ranges and leakage. Defective ranges can show up as a low reading on a range with the higher ranges worse (lower reading). This failure can also be noted in the DCV Function but shows up worse in the Ohms Function. A20Q310 is the most likely cause of leakage in the amplifier. Range Failures are normally caused by the Feedback FETs and possibly the Resistor Network (U200) in the amplifier circuitry. The failures show up as one or more ranges defective. Check and do the following:

a. Only the 100 ohm Range fails. Make sure the X100 Gain of the Input Amplifier is good. If not, check for an open A20Q309 and Q301. Also make sure feedback resistors in U200 are good. The 100 mV Range in the DCV Function should also be defective, if the X100 Gain is inoperative.

b. Only the 1 K ohm and 10 K ohm Ranges fail. Make sure the X10 Gain of the Input Amplifier is good. If not, check for an open A20Q307 and Q303. Also make sure the feedback resistors in U200 are good. The 1 V and 100 V Range in the DCV Function should also be defective, if the X10 Gain is inoperative.

c. Only the 100 K ohm through 1 G ohm Ranges fail. Make sure the X2 Gain of the Input Amplifier is good. If not, check for an open A20Q306 and Q304. Also make sure the feedback resistors in U200 are good. This gain is only used in the 100 K through 1 G ohm Ranges.

d. Only the 100 ohm Range is good. Make sure the X100 Gain of the Input Amplifier is not permanently held in by a shorted A20Q309. The 100 mV Range in the DCV Function should also be the only operative range in that function.

e. Only the 1 K ohm and 10 K ohm Range good. Make sure the X10 gain of the Input Amplifier is not held in by a shorted or leaky A20Q307. The 1 V and 100 V Ranges in the DCV Function should also be the only operative ranges in that function.

f. Only the 100 K ohm through 1 G ohm Ranges good. Make sure the X2 Gain of the Input Amplifier is not held in by a shorted A20Q306.

8-D-34. OHMS CURRENT SOURCE TROUBLESHOOTING.

8-D-35. Use the following troubleshooting information if it has previously been determined that the Ohms Current Source is at fault. (The procedures to determine if this or other circuits are at fault are in Paragraph 8-D-18 and 8-D-20.)

8-D-36. Failures caused by the Ohms Current Source can be a High, Low, Zero (00.0000), or Overload (OL) Reading. The failures can be caused by High, Low, or No Current. Since specific FETs are used to generate the currents, often a defective FET can be determined by what ranges fail and how they fail (high, low, overload, or zero reading). This is especially true for open FETs or inaccurate reference voltages. Shorted or leaky FETs can also affect certain ranges but may also affect all ranges, dependent on the defective FET. The following paragraphs gives the Ohms Range Failures and possible causes.

NOTE

A minus ohms reading is considered a low ohms reading.

NOTE

An Overload (OL) condition on the 100 M and 1 G ohm Ranges only, can show up as a minus ohms reading (approximately −49.XXX +6).

NOTE

The Ohms Current Source may need to be readjusted internally, if components in the Ohms current Source have been replaced. Go to Service Group F for the Adjustment Procedure.

8-D-37. All Ranges Inoperative (Overload, Zero Reading, Accuracy, and Noise).

8-D-38. Use the following procedure to determine the faulty component or circuitry in the Ohms Current Source. Use the procedure only if all Ohms Ranges fail. Do the following:

a. Check for −13 Vdc at A20TP201. If the voltage is good and quiet, the Reference is good. If not, do the following:

1. Make sure pin 3 of U402 is −5.5 V.
2. If the voltage is wrong, make sure the Resistor Divider (U200) is good. The divider can be easily checked by lifting pin 3 of U204. If the divider is good, replace U204.
3. If the voltage at pin 3 is good, make sure the 20.4844 K and 20.4955 K resistors in U200 are good. If they are good, replace U204.

b. Make sure TP202 is −5.5 V on the 100, 1 K, and 10 K ohm Ranges, and −9.25 V on the 100 K ohm and higher Ranges. If not, make sure the Gate Bias Amplifier U203 is good. Also make sure Q201 is turned on for the 100, 1 K, and 10 K ohm Ranges, and Q202 is turned on for the 100 K ohm and higher Ranges.

c. Make sure pin 2 and 3 of U205 is −5.5 V for the 100, 1 K, and 10 K ohm Ranges, and −9.25 V for the 100 K ohm and higher Ranges. If the voltages are bad, make sure Q207 is good. An open Q207 can be easily checked by shorting from its gate to source and measuring for −5.5 V at pin 2 of U205. If Q207 is good, replace U205.

d. Check for a shorted or very leaky Q203, Q205, Q208, and Q209.

8-D-39. Zero Reading and Noise on some Ranges.

8-D-40. A Zero Reading normally shows that no current is generated for the range with the zero reading. This is normally caused by an open FET but can also be caused by some shorted FETs. Noisy readings caused by FETs normally shows up on the range which uses the FET. To determine if a range(s) fails, measure a resistor value which corresponds to the bad range (e.g. 100 ohm resister for a bad 100 ohm Range). If a resistor value is not equal to the full scale value of the range, the failure symptoms may be different. The following are the faulty ranges and causes.

a. Only the 100 and 1 K ohm ranges fail. These ranges use 1 mA to measure resistance. The current is derived by Q209. Make sure the FET is turned on and not noisy, when either range is selected.

b. Only the 100, 1 K, and 10 K ohm Ranges fail. The −5.5 V Reference voltage determines the currents for these ranges. Make sure Q201 is turned on and not noisy, when any one of the ranges are selected. Also make sure Q202 and Q205 are not shorted or leaky.

c. Only the 10 K and 100 K ohm Ranges fail. These ranges use 100 μA and 50 μA currents to measure resistance. The currents are derived by Q208 and the −5.5 V Reference for the 10 K ohm Range and the −9.25 V Reference for the 100 K ohm Range. Make sure Q208 is turned on and not noisy, when either range is selected.

d. Only the 1 M ohm Range fails. This range uses 5 μA current to measure resistance. The current is derived by Q205. Make sure the FET is turned on and not noisy, when the range is selected.

e. Only the 10 M, 100 M, and 1 G ohm Ranges fail. These ranges used 500 nA current to measure resistance. The current is derived by Q203. Make sure the FET is turned on and not noisy, when any one of the ranges are selected.

f. Only the 100 K through 1000 M ohm Ranges fail. The −9.25 V Reference determines the currents for these ranges. Make sure Q202 is turned on and not noisy, when any one of the ranges are selected. Also make sure Q201 is not shorted or leaky.

8-D-41. Overload Readings on some Ranges.

8-D-42. This failure can be caused by shorted or leaky FETs. The bad component(s) can often be determined by what range(s) fail. Make sure the overload condition exists by measuring a resistor value which corresponds to the bad range (e.g. 100 ohm resistor for a bad 100 ohm Range). If another value is used, the failure symptoms may be different. (Remember, an overload on the 100 M and 1000 M ohm Ranges can be a "−49.XXX +6" reading.) The following are the bad ranges and causes.

a. 1 M, 10 M, 100 M, and 1000 M ohm Ranges bad. This failure can be caused by a shorted or leaky Q203, Q205, Q208, and Q209. To determine the faulty FET, check for the following symptoms.

1. If the 100 through 100 K ohm Ranges are Low, Q203 and/or Q205 is at fault.
2. If the 100 and 1000 ohm Range is low and the 10 K and 100 K ohm Range is good, Q208 is at fault.
3. If the 100 through 100 K ohm Ranges read progressively higher, Q209 is at fault.

b. 10 M, 100 M, and 1000 M ohm Ranges bad. Look for a shorted or leaky Q204 and/or Q206.

c. 10 K ohm through 1000 M ohm Ranges bad. Look for a shorted or leaky Q208 and/or Q209.

8-D-43. High or Low Readings on some Ranges.

8-D-44. This type of failure can be caused by shorted or leaky FETs. To make sure if a range fails, measure a resistor value which corresponds to the failing range (e.g. 100 ohm resistor for a defective 100 ohm Range). If a resistor value is not equal to the full scale value of the range, the failure symptomes may be different. Once it has been determined which range(s) fail and how they fail, use Table 8-D-3 to determine the shorted or leaky FET. Note that a FET can cause certain ranges to fail in specific ways. However, because of the way the Ohms Current Source works (some FETs are only partially on), the table should only be used as a guide. The symptoms may change from instrument to instrument.

8-D-45. When using Table 8-D-3, note that a shorted or leaky FET can cause a failure on more than one range. Becuase of this, a defective FET can be determined by what ranges fail and how they fail. One thing to keep in mind. A range may read good but in actuality may be inaccurate. This is true if the error of the range has been adjusted out by a Calibration Potentiometer (Pot F to J).

8-D-46. 4-WRΩ TROUBLESHOOTING.

8-D-47. General.

8-D-48. The following information is for 4-WRΩ Failures that do not show up in the 2-WRΩ Function. If the failure is also present in 2-WRΩ, go to Paragraph 8-D-15 for troubleshooting. Also, troubleshoot any 2-WRΩ Failures first, before troubleshooting for any 4-WRΩ Failures.

8-D-49. The major difference between 4-WRΩ and 2-WRΩ is where the actual ohms measurement is made. In the 2-WRΩ Function, the measurement is made at the VOLTS Input Terminals. In the 4-WRΩ Function, the measurement is made at the RATIO REF (4WRΩ SENSE) Terminals. Selecting the correct terminals is done in the Input Switching Circuitry. Because of this, a 4-WRΩ Failure with no corresponding 2-WRΩ Failure is most likely caused by the Input Switching Circuitry.

Table 8-D-3. Range Failures and Defective FETs.

Range	3456A Reading	Q201	Q202	Q203	Q204	Q205	Q206	Q208	Q209
100	High	X		X			X	X	
	Low		X	X	X	X	X	X	
	OL			X		X			X
	Zero		X						
1 K	High	X		X				X	
	Low		X	X	X	X	X	X	
	OL			X		X			X
	Zero	X							
10 K	High	X		X			X	X	X
	Low		X	X	X	X	X	X	
	OL			X		X		X	X
	Zero		X	X		X			
100 K	High	X	X	X			X	X	X
	Low	X	X	X	X	X	X		
	OL			X		X		X	X
	Zero	X							
1 M	High	X	X	X	X		X	X	
	Low	X			X		X		
	OL			X		X		X	X
	Zero	X							
≥10 M	High	X	X	X					
	Low	X					X		
	OL			X	X	X	X	X	X
	Zero	X							

8-D-50. Failures in the 4-WRΩ Function can be caused by Shorted, Open, or Leaky FETs in the Input Switching Circuitry. The FETs involved are, A20Q104-Q108, Q115, and Q117. The faulty FETs can often be determined by the failure symptoms. The following paragraphs have some possible failures, troubleshooting information, and most likely causes.

NOTE

Make sure the VOLTS (2WRΩ, 4WRΩ) High and Low Terminals are connected to the RATIO REF (4WRΩ SENSE) High and Low Terminals, respectively.

8-D-51. Constant Overload, or High Positive or Negative Readings.

8-D-52. This failure can be caused by Open or Shorted FETs in the RATIO REF (4WRΩ SENSE) Input Switching Circuitry. This failure can also be caused by the Front/Rear Switch. Make sure the switch is making good contact. Once is has been determined that the swtich is good, do the following to determine the faulty component.

a. Press the RESET button and then set the 3456A to the 1 K ohm Range.

b. Connect a 1000 ohm resistor to the Input Terminals. Note the displayed reading (Overload, High Positive, etc.).

c. Remove the 1000 ohm resistor.

d. If the reading remains the same, continue with Step e. If the reading goes to "000.000" or changes more than 1000 counts (with the 3456A in the 5 digit mode), do the following:

1. With a high input impedance Digital Voltmeter (like the 3456A), measure the junction of A20R105, gate of Q107, and source and drain of Q106.
2. If the reading on the Test DVM is zero volts, replace A20Q105.
3. If the reading on the Test DVM is a high negative voltage (approximately −13 V), replace Q106.
4. If the reading on the Test DVM is a high positive voltage (approximately 13 V), replace Q107.

e. If the reading on the 3456A under test remains approximately the same when the 1000 ohm resistor is removed, do the following:

1. With a high impedance Digital Voltmeter (like the 3456A), measure the junction of A20R106, gate of Q117, and source and drain of Q108.
2. If the reading on the Test DVM is a high negative voltage (approximately −13 V), replace Q108.
3. If the measured reading is a high positive voltage approximately 13 V), replace Q117.
4. If the measured reading is jumpy or very unstable, replace Q115. An open Q115 can easily be checked by reconnecting the 1000 ohm resistor to the Input Terminals and shorting the source to the drain of Q115. If the 3456A (under test) now displays the resistor value, Q115 is open.

8-D-53. 4-WRΩ Accuracy Failures.

8-D-54. These failures are normally caused by leaky FETs in the 3456A's Input Switching Circuitry. To find the leaky FET, do the following:

a. Set the 3456A to the 4WRΩ Function and short the Input Terminals. Make sure the instrument is on the 1 K ohm Range with Autozero On.

b. Connect the low input of a high input impedance Digital Voltmeter (like the 3456A) to the input side of A20R106 (orange wire connected at J23). Connect the high input of the Test DVM to the other side or R106. Measure for any voltage across the resistor.

c. If no voltage or less than 5 microvolts is measured across R106, continue with Step d. If a voltage is measured across R106, check and do the following:

1. If the voltage across R106 is negative, replace Q108.
2. If the votlage across R106 is positive, replace Q117.

d. Connect the low input of the Test DVM to the input of A20R105 (gray wire connected to J22). Connect

the high input of the DVM to the other side R105. Measure for any voltage across the resistor.

e. If no or very little (a few microvolts) voltage is measured across R105, replace Q105.

f. If a positive voltage larger than 50 microvolts is measured across R105, replace Q107.

g. If a negative voltage is measured across R105, do the following:

1. Turn Autozero Off.
2. If the voltage across R105 remains the same, replace Q106.
3. If the voltage across R105 appears jumpy or noisy with Autozero On and stable with Autozero Off, replace Q105.
4. If none of the above was noted and the 3456A still has an ohms accuracy failure, Q105 may be defective.

8-D-55. 4-WRΩ Noise Failures.

8-D-56. Ohms Noise Failures in the 4-WRΩ Function, but not the 2-WRΩ Function, is most likely caused by a leaky Autozero FET (A20Q105) in the Input Switching Circuitry. This failure should also show up as a low ohms reading. Replace Q105.

8-D-57. O.C. OHMS FAILURE.

8-D-58. Before troubleshooting for any O.C. Ohms Failures, make sure the 3456A is good in the DCV and Ohms Functions. Most O.C. Ohms Failures should show up in either of the other functions, because the O.C. Ohms Function is very similar to normal ohms. The only difference is that an ohms measurement is taken with the Ohms Current Source alternately turned On and Off. This is accomplished by turning the individual ohms current determining FETs (A20Q201-Q206, Q208, and Q209) On and Off. These FETs and the other circuitry (Input, Current Source) are also used in normal ohms. Therefore, an O.C. Ohms Failure is most likely caused by a FET that is too slow in changing states or the Range and Function Control Logic is not operating correctly.

SERVICE GROUP E

Service Group E Contents

Title	Paragraph
General	8-E-1
Pre-Troubleshooting Information	8-E-4
Switch Closure Command Table	8-E-7
ACV and ACV + DCV Failure Isolation	8-E-9
ACV and ACV + DCV Troubleshooting	8-E-11
All Ranges Inoperative (Overload, Zero Reading, Accuracy, or Noise)	8-E-13
Some Ranges Inoperative	8-E-15
Input Attenuator Troubleshooting	8-E-18
General	8-E-19
Overload, Offset, Floating, or Noisy Readings on the 1 V, 10 V, and 100 V Ranges, or all Ranges	8-E-22
Inaccurate Readings on the 1 V, 10 V, and 100 V, or All Ranges	8-E-24
Overload, Zero, Inaccurate, or Noisy Readings on Some Ranges	8-E-26
Absolute Value Amp Troubleshooting	8-E-28
RMS Converter Troubleshooting	8-E-31
General	8-E-32
Overload, Floating, Noisy, Inaccurate, or Offset Readings	8-E-36
ACV Troubleshooting	8-E-38
General	8-E-39
Inaccuracies At All Frequencies	8-E-43
Inaccuracies At Higher Frequencies	8-E-45
Inaccuracies At Lower Frequencies (Filter In)	8-E-47

SERVICE GROUP E

8-E-1. GENERAL.

8-E-2. This Service Group has the ACV and ACV + DCV troubleshooting information for the 3456A. You must make sure the 3456A is functioning correctly in the DCV Function, before troubleshooting for any ACV or ACV + DCV Malfunctions. (Go to Service Group C if the DCV Function fails).

8-E-3. The Service Group is symptoms oriented (what fails) with two major levels of troubleshooting. The first level uses procedures to determine which area in the AC Converter causes the failure. The second level has information to troubleshoot the faulty area.

NOTE

The AC Converter has to be readjusted according to the ACV Adjustment Procedure in Service Group F, if any components are replaced in the converter.

8-E-4. PRE-TROUBLESHOOTING INFORMATION.

8-E-5. Various Switching FETs are used in the ACV and ACV + DCV Functions. The FETs are turned On and Off by Comparators in the AC Converter. The Comparators are controlled by the Range and Function Control Logic, which in turn is controlled by the Inguard Logic. If a FET is suspected to be defective, make sure the logic is good before replacing the FET. A FET is normally Off with its gate at approximately − 14 V to − 15 V and is On at zero volts. Go to Service Group B, if the Inguard Logic is defective.

8-E-6. Similar to the FETs, the two relays used in the Converter are also controlled by the Range and Function Control Logic. The only difference is that transistors, which are driven by Nand gates, turn the relays On and Off.

8-E-7. SWITCH CLOSURE COMMAND TABLE.

8-E-8. Table 8-E-1 lists the commands for the ACV and ACV + DCV Functions and Ranges. Use the table to determine which FET or Relay is on or off for the AC functions and ranges.

8-E-9. ACV AND ACV+DCV FAILURE ISOLATION.

8-E-10. The 3456A has two AC Functions: ACV and ACV + DCV. The ACV Function can only measure ac voltages and the ACV + DCV Function can measure both ac and dc voltages. Because of this, the functions should be isolated from each other. Do the following:

a. Determine the failure.

b. If the failure is in the ACV Function and not the ACV + DCV Function, go to Paragraph 8-E-38 for troubleshooting.

c. If the failure shows up in both functions, but only for ac inputs (e.g. the failure shows up with a 1 V ac input and not with a corresponding 1 V dc input), go to Paragraph 8-E-38 for troubleshooting.

d. If the failure is in both functions and shows up with an ac and dc input (e.g. the failure shows up with a 1 V ac input and a corresponding 1 V dc input), go to Paragraph 8-E-11 for troubleshooting.

Table 8-E-1. ACV Switch Closure Commands.

Function	Range	Switch Closure Commands					
		H4WH HDH LTS7 HDL	LGS HAM HAL HAC	HACV HOHM HDCH HDCL	HACD LDE HL HM	HA1 HA2 HA10 HA100	H1 H2 H3 H4
ACV	1 V	0010	0111	1000	0000	1000	1000
ACV	10 V	0010	0111	1000	0010	1000	0100
ACV	100 V	0010	0111	1000	0001	1000	0010
ACV	1000 V	0010	0111	1000	0011	1000	0001
ACV + DCV	1 V	0010	0111	1000	0000	1000	1000
ACV + DCV	10 V	0010	0111	1000	0010	1000	0100
ACV + DCV	100 V	0010	0111	1000	0001	1000	0010
ACV + DCV	1000 V	0010	0111	1000	0011	1000	0001

Note: 1 = High, 0 = Low

8-E-11. ACV AND ACV+DCV TROUBLESHOOTING.

8-E-12. Use the following troubleshooting information if both the ACV (ac inputs) and ACV + DCV (ac and dc inputs) Functions fail.

8-E-13. All Ranges Inoperative (Overload, Zero Reading, Accuracy, or Noise).

8-E-14. The Range Failure can show up as a constant Overload (OL), Zero Reading, Noise, or Inaccuracy on all ranges. This can be caused by the Input Attenuator, Absolute Value Amp, or the RMS Converter. Except for Inaccuracy, use the following procedure to determine the faulty circuitry. If the ranges are inaccurate in either the higher (> 100 kHz) or lower (< 400 Hz) frequencies, and appear in only the ACV Function, go to Paragraph 8-E-38 for troubleshooting. If inaccuracy and any of the previous symptoms are noted in both functions with ac (ACV and ACV + DCV Function) or dc (ACV + DCV Function only) inputs, do the following:

a. Press the 3456A's RESET button.

b. Set the instrument to the ACV + DCV Function and 1 V Range.

c. Apply a stable and accurate −1 V dc to the VOLTS Input Terminals. Use the 3456A's DCV Function to determine the accuracy.

d. Using a high impedance Digital Voltmeter (like the 3456A), measure for +1.25 V (±2 mV) at A40TP3.

e. If the voltage is wrong or unstable, do the following:

1. Measure for +.5 V (±1 mV) at TP9.
2. If the voltage is stable and within limits, the Absolute Value Amp is at fault. Go to Paragraph 8-E-28 for troubleshooting.
3. If the voltage is wrong or noisy, the Input Attenuator is at fault. Go to Paragraph 8-E-18 for troubleshooting.

f. If the +1.25 V is stable and within limits, do the following:

1. Remove the −1 V from the Input Terminals and apply an accurate and stable +1 V dc to the terminals. Use the 3456A's DCV Function to determine the accuracy.
2. Measure for +1.25 V (±2 mV) at pin 6 of U3.
3. If the voltage is stable and within limits, the RMS Converter is at fault. Go to Paragraph 8-E-31 for troubleshooting.
4. If the voltage is wrong or noisy, measure for −.5 V (±1 mV) at TP9.
5. If the voltage is stable and within limits, the Absolute Value Amp is at fault. Go to Paragraph 8-E-28 for troubleshooting.
6. If the voltage is wrong or noisy, the Input Attenuator is at fault. Go to Paragraph 8-E-18 for troubleshooting.

8-E-15. Some Ranges Inoperative.

8-E-16. A Range Failure can show up as a Constant Overload (OL), Zero Reading, Noise, or Inaccuracy on some ranges. Since only some ranges fail, the most likely cause is the Input Attenuator Circuitry.

8-E-17. The Input Attenuator consists of two different circuitry: High Voltage and Low Voltage. The circuitry can be isolated by what ranges fail. Check and do the following:

a. Only the 1 V, 10 V, and 100 V Ranges fail. The Low Voltage Attenuator (A40U6, Q2, U7, and associated circuitry) is at fault. Check and do the following:

1. Press the 3456A's RESET button.
2. Set the instrument to the ACV + DCV Function.
3. Check the 1 V, 10 V, and 100 V Ranges by applying accurate and stable −1 V, −10 V, and −100 V dc to the VOLTS Input Terminals, respectively. Use the 3456A's DCV Function to make sure the voltages are accurate.
4. Using a high impedance Digital Voltmeter (like the 3456A), measure for +.5 V (± 1 mV) at A40TP9 for all ranges.
5. If the voltage on all ranges are wrong, the Input Attenuator itself is at fault. Go to Paragraph 8-E-18 for troubleshooting.
6. If the voltage is wrong on only some ranges, the Feedback FETs and/or Feedback Resistors are defective. Go to Paragraph 8-E-18 for troubleshooting.

b. Only the 1000 V Range fails. The High Voltage Attenuator is at fault. Check for the following:

1. If an overload condition is noted, check for oscillation at A40TP2. If oscillation is present, C3 may be open. To check for an open capacitor, connect another capacitor with the same value in parallel with C3. If the oscillation stops, replace C3. If no oscillation is present, make sure the 2.5 K ohm resistor in U3 is good. If good, U1 may be defective.
2. If a zero reading (<20 counts in the 5 Digit Mode) is noted, A40Q8 may be open. Make sure the FET is not held open by its logic. Use Table 8-E-1 to determine the correct level. If Q8 is good, try replacing U1.
3. If the range is inaccurate, make sure the 2.5 K ohm resistor in U3 is good. If good, U1 may be at fault.
4. If the 1000 V Range is noisy, carefully short the source to drain of Q8. If the range is now good, replace Q8. If still noisy, replace U1.

8-E-18. INPUT ATTENUATOR TROUBLESHOOTING.

8-E-19. General.

8-E-20. Before troubleshooting the Input Attenuator, make sure the failure is not in the Absolute Value Amp or RMS Converter. Refer to Paragraph 8-E-11 and 8-E-38 to determine the faulty circuitry.

8-E-21. Failures caused by the Input Attenuator can be Inaccurate, Overload, or Noisy Readings. Other possible failures can be a Floating Reading (the displayed reading does not change when a different input is applied to the 3456A), or a large offset. If the failures show up on some ranges, go to Paragraph 8-E-26 for troubleshooting. For failures on the 1 V, 10 V, and 100 V ranges or all ranges, continue with the next paragraph.

8-E-22. Overload, Offset, Floating, or Noisy Readings on the 1 V, 10 V, and 100 V Ranges, or All Ranges.

8-E-23. The Overload Failure normally shows up as a saturated output of the Input Attenuator and can be caused by a defective A40Q2, U6, or U7. The Floating Reading can also be caused by Q2, U6, or U7 and if there is an open circuit. An offset is most likely caused by Q2 and U6. Noise can be caused by Q2, U6, or U7. To determine the faulty component, do the following:

a. Turn the 3456A Off.

b. Using a clip lead, carefully connect the gate of A40Q2 (pin 6) to pin 6 of U6.

c. Using another clip lead, connect the gate of A40Q2 (pin 3) to ground.

d. Turn the 3456A On.

e. Set the instrument to the ACV + DCV Function and 10 V Range.

f. Using a high impedance Digital Voltmeter, measure the voltage at pin 6 of U6.

g. If the voltage is approximately zero (< ± 100 mV) and stable, Q2 and U6 should be good. Try replacing U7.

h. If the voltage is other than zero or noisy, Q2 or U6 may be defective.

8-E-24. Inaccurate Readings on the 1 V, 10 V, and 100 V Ranges, or All Ranges.

8-E-25. Inaccurate readings are most likely caused by the 1 M ohm resistor in A40U3. If the 1000 V Range is the only good range, the Low Voltage Input Attenuator is at fault. Use the procedure in Paragraph 8-E-22 (Overload, Offset, etc.) to troubleshoot the attenuator.

8-E-26. Overload, Zero, Inaccurate, or Noisy Readings on Some Ranges.

8-E-27. If it has been determined that the Low Voltage Attenuator is defective on some ranges, locate the defective FETs or resistors by what ranges fail and how they fail. Check for the following:

a. Overload Reading. This is most likely caused by a shorted or very leaky FET to ground. Make sure the suspected FET is not being held on by the logic. Use Table 8-E-1 to determine the correct logic. An overload can also be caused by an open capacitor across the Feedback Resistors. This normally shows up as oscillation at TP9 on the faulty range. When oscillation is noted (on a defective range), connect a capacitor of the same value in parallel with the suspected open capacitor. The following lists the ranges and faulty components.

Only Range Fails	Cause
1 V	A40Q11, Q20, C11
10 V	A40Q10, C10
100 V	A40Q3, C12

Only Range Good	Cause
1 V	A40Q20

b. Zero Reading. A Zero Reading (<20 counts in the 5 Digit Mode) is normally caused by open FETS in the Input Attenuator. Make sure the suspected FET is being turned on by the logic. Use Table 8-E-1 to determine the correct logic levels. The following lists the ranges and faulty FETs.

Only Range Fails	Cause
1 V	A40Q5, Q9
10 V	Q40Q4, Q7
100 V	A40Q1, Q6

c. Inaccurate or Noisy Reading. This is normally caused by leaky (or noisy) Feedback FETs or Feedback Resistors. The faulty component can often be determined by what range fails. The following lists the ranges and faulty components.

Only Range Fails	Cause
1 V	A40Q11, 500 K ohm in U3
10 V	A40Q10, 50 K ohm in U3
100 V	A40Q3, 5 K ohm in U3

8-E-28. ABSOLUTE VALUE AMP TROUBLESHOOTING.

8-E-29. Before troubleshooting the Absolute Value Amp, make sure the failure is not in the Input Attenuator or RMS Converter. Refer to Paragraph 8-E-11 and 8-E-38 to determine the faulty circuitry.

8-E-30. The Absolute Value Amp can cause Overload (OL), Noisy, Floating, or Inaccurate Readings. To determine the faulty component, do the following:

a. Press the 3456A's RESET button.

b. Set the 3456A to the ACV + DCV Function and 10 V Range.

c. Apply a stable and accurate −10 V dc to the VOLTS Input Terminals. Use the 3456A's DCV Function to determine the accuracy.

d. Using a high impedance Digital Voltmeter (like the 3456A), measure for +1.25 V (±2 mV) at A40TP3.

e. If the voltage is wrong or noisy, do the following:

1. Make sure the voltage at TP3 is the same as on pin 1 of U3.
2. If it is the same, make sure CR5 is conducting and not shorted. Replace, if defective. Also make sure Q12 is conducting (correct emitter-base junction bias). Replace U4 if Q12 is good.
3. If not the same, make sure the 5 K ohm resistors in U3 are good (measure from pin 2 to pins 1 and 3 of U3). If they are good, replace U2.

f. If the voltage is stable and good, remove the −10 V from the Input Terminals and apply +10 V dc to the terminals.

g. Using the Test Voltmeter, measure the voltage at pin 6 of U3. The voltage should be +1.25 V (±2 mV).

h. If the voltage is wrong, make sure CR7 is conducting and not shorted. Replace the diode, if defective. Also make sure Q13 is conducting (correct emitter-base junction bias). Replace U7, if good.

i. If the voltage is good, the failure is not in the Absolute Value Amp. The failure is most likely in the RMS Converter.

8-E-31. RMS CONVERTER TROUBLESHOOTING.

8-E-32. General.

8-E-33. Before troubleshooting the RMS Converter, make sure the failure is not in the Input Attenuator or Absolute Value Amp. Refer to Paragraph 8-E-11 and 8-E-38 to determine the faulty circuitry.

8-E-34. AC Failures caused by the RMS Converter can be Inaccurate, Overload, and Noisy Readings. Other possible failures can be a Floating Reading (the displayed reading does not change when a different input is applied to the 3456A), or a large offset.

8-E-35. The RMS Converter has three major circuits: Squaring Amp, Square Root Amp, and Averaging Amp. Since the circuitry interacts with each other, they should be isolated from each other. The following paragraphs have the failures and troubleshooting procedure.

8-E-36. Overload, Floating, Noisy, Inaccurate, or Offset Readings.

8-E-37. To isolate the faulty circuitry, do the following:

a. Turn the 3456A Off.

b. Using a clip lead, connect the gate of A40Q14 to ground.

c. Turn the 3456A On.

d. Set the instrument to the ACV Function and the 10 V Range.

e. Apply a 10 V, 1000 Hz sine wave to the VOLTS Input Terminals.

f. Using an oscilloscope, measure for the signal shown in Figure 8-E-1A at TP16. Make sure the signal is stable (not jumpy).

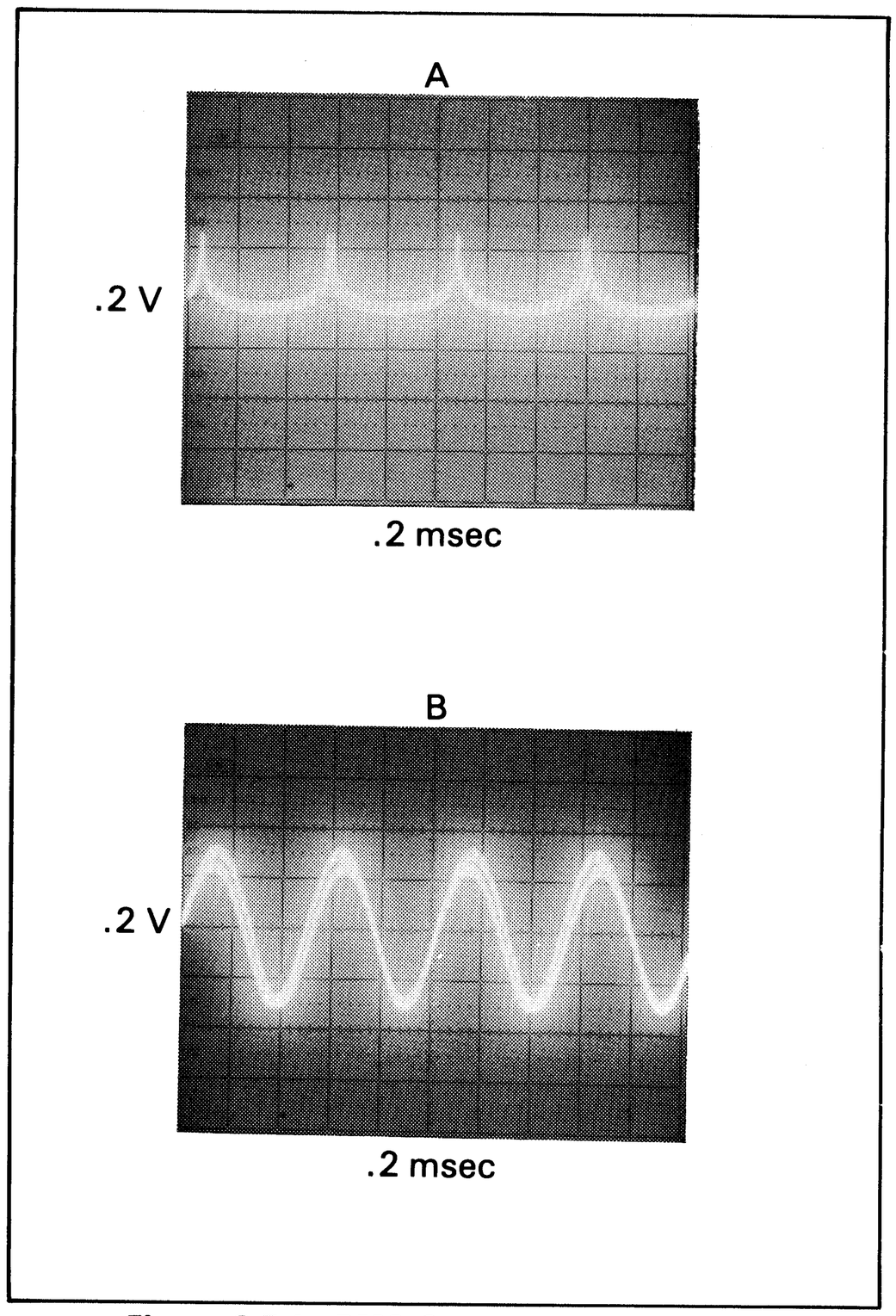

Figure 8-E-1. RMS Converter Waveforms.

g. If the signal is not present, different, or unstable, do the following:

1. Turn the 3456A Off.
2. Using a clip lead with small clips, connect TP8 to pin 1 of Q16A (this connects the output of U5 to its minus input).
3. Turn the 3456A On.
4. Set the instrument to the ACV Function.
5. Using a high impedance Digital Voltmeter (like the 3456A), measure for zero volts (±10 mV) at TP8.
6. If the voltage is wrong, replace U5.
7. If the voltage is good, make sure Q16A and Q15 are turned on (approximately .6 V across the emitter-base junction).

8. If any of the transistors are not turned on, replace the defective transistor.
9. If the transistors are turned on, try replacing Q17.
10. Turn the 3456A Off and remove the clip lead between TP8 and Q16A.

h. If the signal at TP16 is good, check for the signal shown in Figure 8-E-1B at TP17.

i. If the signal is not present, different, or unstable, do the following:

1. Make sure Q16B is turned on (approximately .6 V across the emitter-base junction).
2. If the voltage is good, replace Q17. If not, replace U13.
3. Replace U13.

j. If the signal at TP17 is good, do the following:

1. Leave the gate of Q14 connected to ground. Using another clip lead, carefully connect TP10 to pin 2 of U12 (or short across C28).
2. Using a high impedance Digital Voltmeter (like the 3456A), measure the voltage at TP10.
3. If the voltage is not zero (>10 mV) or unstable, replace U12.
4. If the voltage is good, replace Q14.

8-E-38. ACV TROUBLESHOOTING.

8-E-39. General.

8-E-40. Use the following procedures to troubleshoot the 3456A if the intrument only fails in the ACV Function. Also use the procedures if the instrument fails with ac inputs (in both the ACV and ACV+DCV Functions).

8-E-41. If the ACV Function is inoperative and the ACV+DCV Function is good, A40K1 may be open. This can be checked by shorting across the relay's contacts. If the function is then good, make sure K1 is turned on by Q19 and U10. If Q19 and U10 are good, replace K1.

8-E-42. AC Failures in both the ACV and ACV+DCV Functions with no corresponding DC Failures in the ACV+DCV Functions, are normally Inaccurate Readings. This can show up as wrong readings at all frequencies, lower (<400 Hz) frequencies, or higher (>100 kHz) frequencies. The following are the failures and troubleshooting information.

8-E-43. Inaccuracies At All Frequencies.

8-E-44. Check and do the following:

a. If the failure is in all ranges, do the following:

1. Press the 3456A's RESET button.
2. Set the 3456A to the ACV+DCV Function and 10 V Range.
3. Apply a 10 V, 1000 Hz sine wave to the VOLTS Input Terminals.
4. Make sure the signals at A40TP3 and pin 6 of U3 are a clean half-wave sine wave.
5. If the signals are good (not oscillating), the RMS Converter is most likely at fault. Go to Paragraph 8-E-31 for troubleshooting.
6. If the signals are oscillating, measure the signal at TP9.
7. If the signal is a clean sine wave, make sure C16, C17, and C18 are good. The capacitors can be checked by connecting another capacitor with the same value across the individual capacitors. If the capacitors are good, replace U4.
8. If the signal is oscillating, make sure C25 is good. If good, U7 or U6 may be defective.

b. If the failure shows up on some ranges, the Input Attenuator is at fault. Go to Paragraph 8-E-18 for troubleshooting.

8-E-45. Inaccuracies At Higher Frequencies.

8-E-46. Check and do the following:

a. If the failure is in all Ranges, check the following:

1. Make sure capacitors A40C16, C17, and C18 are good.
2. Check for a frequency sensitive CR5 and CR7.
3. Make sure Q17 and Q16 are not frequency sensitive.

b. If the failure is in only the 1 V, 10 V, and 100 V Ranges, check and do the following:

1. Make sure capacitors A40C22, and C25 are good. The capacitors can be checked, if open, by connecting another capacitor with the same value across the individual capacitor.
2. Repad C26, as given in Servie Group F (ACV Adjustment). If another value C26 improves the accuracy, replace U7. (Note: C26 may need to be repadded, if U7 is replaced.)
3. If the capacitors and U7 appear to be good, try replacing Q2 or U6.

c. If the failure is in either the 1 V, 10 V, or 100 V Range, the failure can be caused by a defective A40C10, C11, or C12. The faulty capacitor can be determined by which range fails. The following lists the ranges and faulty component.

Only Range Fails	Cause
1 V	A40C11
10 V	A40C10
100 V	A40C12

d. If the failure is on only the 1000 V Range, check and do the following:

1. Make sure capacitor A40C3 is good.
2. Replace U1.

8-E-47. Inaccuracies At Lower Frequencies (Filter In).

8-E-48. This failure is most likely caused by the Averaging Amp (A40U12 and associated circuitry) in the RMS Converter. Make sure A40Q21 is on (when the 3456A's Analog Filter is enabled), and Q22 and Q23 are off. Check and make sure the logic turns the correct FET On and Off, before replacing the suspected defective FET.

SERVICE GROUP F

Service Group F Contents

Title	Paragraph
General	8-F-1
Power Supplies Troubleshooting	8-F-3
Outguard Power Supply	8-F-6
Inguard Power Supply	8-F-8
Reference Troubleshooting	8-F-10
Internal Adjustment Procedures	8-F-12
Reference Adjustment	8-F-14
A/D Adjustment	8-F-16
DCV Adjustment	8-F-18
100 V Adjustment	8-F-20
Ohms Adjustment	8-F-22
ACV Adjustment	8-F-24
250 kHz Adjustment	8-F-26

SERVICE GROUP F

8-F-1. GENERAL.

8-F-2. This Service Group has Power Supplies troubleshooting information and the 3456A's Internal Adjustment Procedures. Use the Adjustment Procedure if components have been replaced in the instrument. Also, use the procedure that applies to the circuitry in which a component was replaced (e.g. ACV Adjustment, AC Converter). The following lists the circuitry and corresponding adjustment procedure.

Circuitry	Adjustment Procedure
Reference	Reference Adjustment
A/D Converter	A/D Adjustment
Input Switching	DCV Adjustment
Input Amplifier	DCV Adjustment
100V DC Input	100V Adjustment
Ohms Current Source	Ohms Adjustment
AC Converter	ACV Adjustment
250 kHz Circuitry	250 kHz Adjustment

NOTE

The adjustment procedures in this Service Group does not have to be performed at the 3456A's normal calibration time. They should only be performed after repairing the instrument.

NOTE

The 3456A should be on at least one hour with covers in place and at its operating temperature, before doing any adjustments.

8-F-3. POWER SUPPLIES TROUBLESHOOTING.

8-F-4. There are two groups of Power Supplies in the 3456A, Outguard and Inguard. The Outguard Supply consists of a single +5V supply. The Inguard Supplies consists of a +33V raw supply and +15V, −15V, −18V, and +5V regulated supplies. The following paragraphs have the troubleshooting information for both Inguard and Outguard Power Supplies.

8-F-5. In addition to the Inguard Power Supplies, the A20 board also has various 2V supplies. These supplies are used to bias comparators used in the Input Switching, Input Amplifier, A/D Converter, and Ohms Circuitry. The supplies consists of a simple voltage divider used to divide the +5V power supply down to +2V. Each of the circuitry, except the Input Switching, have their own supply. The Input Switching uses the supply for the Ohms Circuitry. Since either circuitry can load down the supply, the Input Switching can be isolated from the Ohms Circuitry by lifting jumper A20JMPR103.

8-F-6. Outguard Power Supply.

8-F-7. An Outguard Power Supply failure can be caused by the supply itself (U1, A3CR5 through CR8) or by a shorted Integrated circuit on the A3 or A4 board. Since part of the power supply is located on the A3 board, the A4 board is the only board that can be isolated. To do that, remove the A4 board. If the supply is good (+4.75V to +5.25V), check for a shorted IC on the A4 board. If the supply is still inoperative, make sure A3CR5 through CR8 and zener diode CR1 are good. If they appear good, replace U1 (mounted on the chassis near T1). If still inoperative, check for a shorted IC on the A3 board.

8-F-8. Inguard Power Supplies.

8-F-9. Failures in the Inguard Power Supplies can be caused by the supplies themselves or by shorted components in the Inguard. To troubleshoot a supply, do the following:

a. Determine which supply fails.

b. Turn the 3456A Off.

c. Refer to Table 8-F-1 to determine which board uses the inoperative supply and where to measure the various supplies. Remove the board(s) that use the inoperative supply.

Table 8-F-1. Inguard Power Supply Locations.

Power Suply	Measured At	Board Number
+33V	A10P15 Pin 7	A20
+15V	A10P15 Pin 6	A20,A40
−15V	A10P15 Pin 3	A20,A40
+ 5V	A10P15 Pin 4,5	A20,A30,A40
−18V	A10P15 Pin 2	A20

d. Turn the 3456A On.

e. If the power supply is still inoperative, troubleshoot the supply by doing the following:

1. Measure the voltages and ripple on the raw supplies. The voltages and ripples should be checked with the regulated supply loaded. The nominal voltages, ripple, load resistor value, etc. are listed in Table 8-F-2.

2. If the raw voltages are good, replace the regulator IC of the inoperative supply, as given in Table 8-F-2.
3. If the raw supply is defective, make sure the rectifiers and filter capacitors are good. Replace, if defective.

Table 8-F-2. Power Supplies Levels.

Power Supply	Raw Supply	Ripple (Raw Supply)	Load Resistor	Voltage Regulator
+33V	+33V to +46V	<2Vp-p	3k ohms(1W)	-
+15V	+17.5V to +30V	<.8Vp-p	220 ohms(2W)	A10U2
−15V	−17.5V to −30V	<.8Vp-p	220 ohms(2W)	A10U3
+ 5V	+7V to +15V	<.5Vp-p	1.5k ohms(5W)	A10U1
−18V	−21V to −33V	1Vp-p	470 ohms(1W)	A10U4

f. If the defective power supply is now good, connect the appropriate load to the supply as given in Table 8-F-2.

g. If the supply is unable to handle the load, replace the regulator IC as given in Table 8-F-2.

h. If the supply is able to handle the load, the circuitry which connects to the supply is loading the supply down. To help isolate the circuitry, open the power supply jumpers used by the various circuitry. The jumpers are listed in Table 8-F-3.

Table 8-F-3. Power Supplies Jumpers and Location.

Power Supply	Assembly Number	Jumper Number	Schematic Number
+33V	A20	-	3
+15V	A20	102	1
+15V	A20	205	2
+15V	A20	304	3
+15V	A20	507	4,5A,5B
+15V	A40	-	7
−15V	A20	101	1
−15V	A20	206	2
−15V	A20	303	3
−15V	A20	506	4,5A,5B
−15V	A40	-	7
+ 5V	A20	-	1
+ 5V	A20	208	2
+ 5V	A20	301	3
+ 5V	A20	403	4
+ 5V	A40	-	7
+ 5V	A30	-	8
−18V	A20	-	1
−18V	A20	207	2
−18V	A20	302	3
−18V	A20	-	4
−18V	A20	505	5

8-F-10. REFERENCE TROUBLESHOOTING.

8-F-11. The Reference Voltage Supplies in the 3456A are −12Va, −12Vb, and +12V. The −12Va Supply is the main reference voltage, and −12Vb and +12V are referenced to that voltage. To troubleshoot the reference voltages do the following:

a. Determine which voltage (−12Va, −12Vb, or +12V) supply is defective.

b. If the −12Va supply is defective, do the following:

1. Make sure the supply is not loaded down by other circuitry. Do this by lifting jumper A20JMPR503. If the supply is good, a component in the other circuitry is loading down the supply. Refer to Schematic 2, 3, 4, and 7 for the other circuitry.
2. If the supply is still defective, make sure A20Q501, CR502, and CR503 are good. Replace Q501, CR502, or CR503, if defective.
3. If the components are good, replace the Reference Board and readjust the Reference Voltage (go to Paragraph 8-F-14).

NOTE

Do not replace any components on the Reference board (A24 or A25), or inaccuracy to the 3456A will result.

c. If the −12Vb and/or +12V supplies are defective, do the following:

1. Make sure the +12V supply is not loaded down by other circuitry. Do this by lifting jumper A20JMPR504. If the supply is good, a component in the other circuitry is loading down the supply. Refer to Schematic 2, 4, and 7 for the other circuitry. The A/D Circuitry (Schematic 4), which uses this supply, can be isolated by lifting jumper A20JMPR402.
2. If the supply is still defective, replace A20U505.
3. If the −12Vb supply is defective, remove the A20 board. If the supply is now good, lift jumper A20JMPR401. If the supply is now good, troubleshoot the A/D Circuitry. If the supply is still inoperative, replace A20U504.

8-F-12. INTERNAL ADJUSTMENT PROCEDURES.

8-F-13. The following are the 3456A's Internal Adjustment Procedures. The adjustment in each procedure must be performed in the order they are presented.

8-F-14. Reference Adjustment.

8-F-15. Do this procedure only if the Reference Assembly (A24 or A25) has been changed or any components in the Reference Circuitry have been replaced (A20U505, etc.). Do the following:

a. Press the 3456A's RESET button.

b. Place jumper A20J29 to the ground position and set all the jumpers located at the right of A20U500 between A20J26 and J27, as shown in Figure 8-F-1.

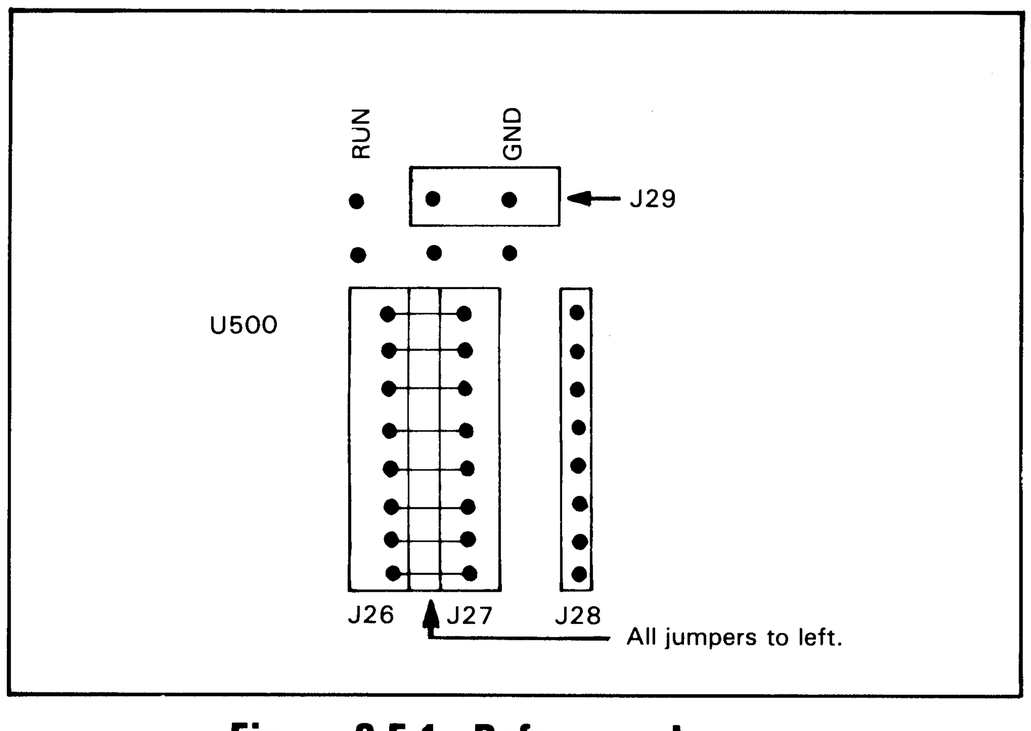

Figure 8-F-1. Reference Jumpers.

c. Connect the input of the Input Amplifier (white wire connected at pin 3 of A20Q310) to A20TO102.

d. Set the 3456A to Trigger HOLD (press the HOLD button).

e. Using a high impedance Digital Voltmeter (like the 3456A), measure the voltage at A20TP403. The voltage should be < ± 125mV.

f. If the voltage is correct, continue with the next step (step g). If the voltage is incorrect, do the following:

1. Remove the test meter from TP403.
2. Turn the 3456A Off.
3. Replace and make sure jumpers A20JMPR501 and JMPR502 are in their respective places.
4. Turn the 3456A On and allow the instrument to warm up to its operating temperature.
5. Reconnect the test meter to TP403 and note the reading. Then determine the jumper to be removed to bring the reading into tolerance (< ± 125mV). To determine the correct jumper, refer to the following:

Cut this Jumper	Voltage at TP403
A20J50	between −375mV and −125mV
A20J502	between −676mV and −375mV
A20J501 and J502	between −875mV and −625mV

6. Continue with the next step.

g. Remove the test meter from TP403.

h. Reconnect the input of the Input Amplifier to A20J19.

i. Replace jumper A20J29 to the RUN position.

j. Press the 3456A's RESET button

k. Set the 3456A to the 6 Digit Mode (by storing 6 into the N DIGIT DISP Register).

l. Remove the 3456A's Front Panel Calibration Cover (see Section V, Paragraph 5-9 for the cover's removal procedure). Set Calibration Adjustment "A" to the 6 position.

m. Apply an accurate and stable +10V dc to the VOLTS Input Terminals.

n. Locate the jumpers next to (the right of) A20U500. These are the Reference Coarse Adjustment Jumpers. While referring to the 3456A's displayed reading, start with the jumper to the rear of the instrument and move each jumper one at a time from A20J26 and J27 to J27 and J28 (move from left to right). Each time a jumper is moved and the reading exceeds +10V, replace the jumper back to its original position. If reading does not exceed +10V, leave the jumper in the right position and go to the next jumper. Do this for all jumpers.

o. After all the jumpers have been moved, do the DCV Adjustment Procedure in Section V of this manual (Adjustments).

8-F-16. A/D Adjustment.

8-F-17. Do this adjustment only after repairing the A/D Converter. Do the following:

a. Press the 3456A's RESET button.

b. Set the instrument to the 6 Digit Mode (by storing 6 into the N DIGIT DISP Register).

c. Apply an accurate and stable +10V dc to the VOLTS Input Terminals. Note the displayed reading.

d. Reverse the polarity of the +10V (apply −10V dc) and note the reading. If there is a difference in amplitude of 2 counts or less, no adjustment is needed. If the difference is more than 2 counts, remove the 10V from the Input Terminals and do the following:

1. Turn the 3456A Off.
2. Unsolder and remove A20R403, if there is one present.
3. Turn the 3456A On and allow the instrument to warm up to its operating temperature. (Note: If the 3456A has only been off for a short time, less than 5 minutes, 15 to 30 minutes warm-up time should be sufficient.)
4. Set the instrument to the 6 Digit Mode (by storing 6 into the N DIGIT DISP Register).
5. Apply an accurate and stable +10V dc to the VOLTS Input Terminals. Note the displayed reading.
6. Reverse the polarity of the +10V (apply −10V dc) and note the reading. The negative reading should be greater in amplitude than the positive reading. To bring the reading into tolerance, repad R403. Choose the correct value from the following:

Reading Difference	Resistor Value
1 count	402K
2 counts	301K
3 counts	200K
4 counts	100K

8-F-18. DCV Adjustment.

8-F-19. Do this procedure only after repairing the Input Amplifier and Input Switching Circuitry. Do the following:

a. Make sure the 3456A has been warmed up for at least 1.5 hours, then press the instrument's RESET button.

b. Connect the input of the Input Amplifier (white wire connected to pin 3 of A20Q310) to A20TP102.

c. Set jumper A20J29 to the ground position, as shown below.

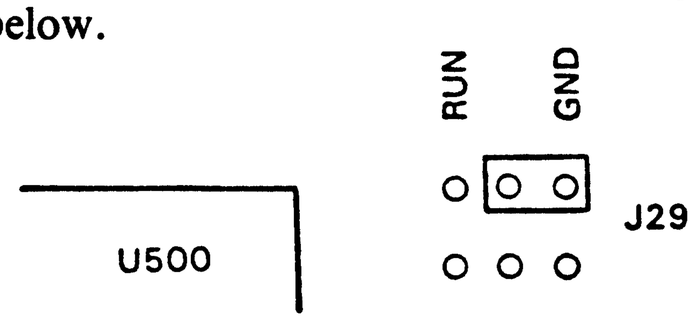

d. Set the 3456A to the 100mV Range and the 6 Digit Mode (by storing 6 into the N DIGIT DISP Register).

e. Connect a high impedance Digital Voltmeter (like the 3456A) to A20TP303. Adjust A20R334 until a null (0 reading, ±10mV) is read on the test meter. Remove the meter from TP303.

f. Reconnect the input of the Input Amplifier to A20J19.

g. Replace jumper A20J29 to the RUN position.

h. Short the 3456A's VOLTS Input Terminals.

i. Note the instrument's displayed offset reading.

j. If the offset is zero, continue with step m.

k. If the offset is positive or negative by less than 2μV (20 counts), the 3456A's low input circuitry needs to be padded. The padding instructions are as follows:

1. If the offset is positive, connect a resistor (see step 3 for the correct vlue) between the +13V terminal at A20CR102 and the node between A20R149 and A20R104.
2. If the offset is negative, connect a resistor (see step 3 for the correct value) between the −13V terminal at A20CR102 and the node between A20R149 and A20R104.
3. The correct resistor values are as follows:

Offset	Padding Resistor	-hp- Part Number
0.0-0.9μV	no resistor required	-----
1.0-1.4μV	12M ohm	0699-0740
1.5-1.9μV	8.2M ohm	0699-0741
2.0μV	6.8M ohm	0698-6592

l. If the offset is >2μV, calibrate and/or repair the instrument.

m. Check the 3456A's 100V Range for a maximum offset of 0.2mV. If the offset is greater, calibrate and/or repair the instrument.

n. Set the 3456A to the 100MV Range.

o. Set the 3456A to the 100 Number of Cycles Integrated Mode (by storing 100 into the N CYC INT Register).

p. Adjust A20R147 for a zero reading (±1 count) on the display.

q. Turn the Analog Filter on (press the FILTER button) and adjust A20R148 for a zero reading (±2 counts) on the display.

r. Remove the short from the Input Terminals.

8-F-20. 100V Adjustment.

8-F-21. Do this procedure only when the 100V Adjustment (Front Panel Adjustment Pot "E") is out of adjustment range. If that is the case, remove (or insert) jumper A20JMPR602 to bring the adjustment into range.

8-F-22. Ohms Adjustment.

8-F-23. Do this procedure only after repairing the Ohms Current Source. Do the following:

a. Press the 3456A's RESET button.

b. Set the instrument to the 4-WRΩ Function and the 6 Digit Mode (by storing 6 into the N DIGIT DISP Register).

c. Remove the 3456A's Front Panel Calibration Cover (see Section V, Paragraph 5-9 for the cover's removal procedure).

d. Turn the front panel Calibration Pot "F" completely counter-clockwise.

e. Connect an accurate 10K ohm Resistor (its value within the 3456A's 10K ohm specifications) to the 4-WR Ohms Input Terminals.

f. Note the front panel reading. The reading should be between 9.9970K and 9.9990 K ohms. If the reading is good, no adjustment is needed. If the reading is not within the limits, do the following:

1. Turn the 3456A Off.
2. Replace and make sure jumpers A20JMPR201 through JMPR204 are in their respective places (replace with new jumpers, if missing).
3. Turn the 3456A On and allow the instrument to warm up to its operating temperature.
4. Set the instrument to the 4-WRΩ Function and the 6 Digit Mode (by storing 6 into the N DIGIT DISP Register).
5. Reconnect the accurate 10K ohm Resistor to the 4-WR Ohms Input Terminals.
6. Note the front panel reading. Each one of jumper JMPR201 through JMPR204, when cut or removed, changes the reading a certain amount. To bring the reading into tolerance, determine the needed resistance value. Once that is determined, remove one or more jumpers to bring the reading

into tolerance. For example, the reading is 9.9950K ohms; a resistance value of 20 ohms is needed to bring the reading in. Adding the resistance value of JMPR201 (12.5 ohms), JMPR202 (6.4 ohms), and JMPR203 (3.3 ohms) gives a total value of 22.2 ohms which increases the reading to 9.9972K ohms. The corresponding resistance value of each jumper is as follows:

JMPR204: 1.7 ohms
JMPR203: 3.3 ohms
JMPR202: 6.4 ohms
JMPR201: 12.5 ohms

8-F-24. ACV Adjustment.

8-F-25. Do this procedure only after repairing the AC Converter. The common ground used for the ACV Adjustments is the ground #1. Do the following:

a. Press the 3456A's RESET button.

b. Set the instrument to the ACV + DCV Function and the 100V Range.

c. Remove the 3456A's Front Panel Calibration Cover (see Section V, Paragraph 5-9 for the cover's removal procedure).

d. Short the VOLTS Input Terminals.

e. Connect the "High" input of a high impedance Digital Voltmeter (like the 3456A) to A40TP9 and the "Low" input to TP1.

f. Adjust Calibration Pot "N" (on front panel) for a 0.0000 (< ± 10μV) reading on the test meter.

g. If unable to adjust to tolerance, install jumpers A400JMPR3 and/or JMPR4 to either +12V or −12V to bring the reading into tolerance. (See below.)

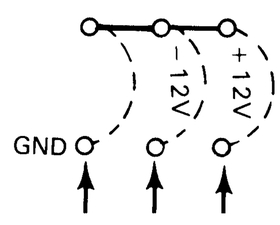

Jumper to be installed in one of three positions.

h. If the reading is good, measure between A40TP11 (high) and ground (low). Make sure the reading is less than ±9.3V.

i. Remove or insert jumpers A40JMPR3 and JMPR4 until the conditions in step e and h are met.

j. If no jumpers need to be installed, place jumper A40JMPR3 and JMPR4 to ground.

k. Set the 3456A to the ACV Function and 1V Range.

l. Adjust A40R77 to its center position.

m. Connect A40TP12 to TP15.

n. Connect the test meter's "High" input to A40TP17 and the "Low" input to TP12. Adjust A40R86 for a −.370V (< ±.005) reading, as read on the meter.

o. Connect the test meter's "High" input to A40TP4 and the "Low" input to TP12. Adjust A40R77 for a +1.5mV (< ±.1mV) reading, as read on the meter.

p. Repeat steps n and o until both readings are within the specified limits.

q. Remove the test meter and the connection between A40TP12 and TP15.

r. Connect the test meter's "High" to the collector of A40Q13 and "Low" to TP1. (Note: Under certain circumstances, Q13 may oscillate. If this is the case, try decoupling the meter with a 10K ohm resistor at the collector of Q13).

s. Adjust Calibration Pot "M" (on front panel) for a 0.0000 (< ±30mV) reading on the test meter.

t. If unable to adjust to tolerance, install jumpers A40JMPR2 and/or JMPR6 to either +12V or −12V to bring the reading into tolerance. (See step g.)

u. If the reading is in tolerance, measure between A40TP5 (high) and ground (low). Make sure the reading is less than ±8.25V.

v. Remove or insert jumpers A40JMPR2 and JMPR6 until the conditions in step s and u are met.

w. If no jumpers need to be installed, place jumper A40JMPR2 and JMPR6 to ground.

x. Connect the test meter's "High" to A40TP16 and "Low" to TP1.

y. Adjust Calibration Pot "K" (on front panel) for a −0.8V (< ±1mV) reading on the test meter.

z. If unable to adjust to tolerance, install jumpers A40JMPR7 and/or JMPR8 to either +12V or −12V to bring the reading into tolerance. (See step g.)

aa. If the reading is good, measure between A40TP6 (high) and ground (low). Make sure the reading is less than ±8.5V.

bb. Remove or insert jumpers A40JMPR7 and JMPR8 until the conditions in step s and u are met.

cc. If no jumpers need to be installed, place jumper A40JMPR7 and JMPR8 to ground.

dd. Remove the short from the Volts Input Terminals and remove the test meter.

ee. Adjust Calibration Pot "L" (on front panel) fully clockwise.

ff. Apply an accurate 1V ac at 1kHz to the VOLTS Input Terminals.

gg. If the reading is within 1.00000V and 1.01000V, no further internal adjustments are necessary. Do the ACV Adjustments in Section V of this manual (Adjustments).

hh. If the reading is below 1.00000V, remove jumpers A40JMPR11 and/or JMPR12 to bring the

reading into tolerance. The change in reading each jumper produces is as follows:

Remove Jumper	Change in Reading
JMPR11	Approximate 1% increase
JMPR12	Approximate 2% increase
JMPR11 and JMPR12	Approximate 3% increase

ii. If the reading is above 1.01000V, install jumpers A40JMPR11 and/or JMPR12 to bring the reading into tolerance. (The effect each jumper has on the reading, is given in step hh.)

jj. Do the ACV Adjustments in Section V of this manual (Adjustments).

8-F-26. 250 kHz Adjustment.

8-F-27. Do this adjustment only if repairs have been made to the Input Attenuator Circuitry in the AC Converter. Do the following:

a. Make sure the ACV Adjustment (per Section V of this manual) has been completed and that the 3456A meets its ACV Specifications.

b. Press the 3456A's RESET button.

c. Set the instrument to the ACV Function and 10V Range.

d. Apply an accurate 10V ac at 250kHz to the VOLTS Input Terminals.

e. If the front panel reading is between 9.7000 and 10.3000, continue with step g.

f. If the reading is out of tolerance, change A40C26 to another value until the reading is in tolerance. (A change in capacitance of 3pf produces an approximate .1% change in reading.)

g. Note the final reading and then remove the 10V ac from the VOLTS terminals.

h. Set the 3456A to the 1V Range.

i. Apply an accurate 1V ac at 250kHz to the VOLTS Input Terminals.

j. Adjust A40R23 for the same reading as in step g within 500μV. For example, the reading in step g was 10.1000V. The reading in this step should be between 1.01050V and 1.00950V.

k. If unable to adjust A20R23, insert or remove jumpers A40JMPR9 and/or JMPR10 until the adjustment has enough range.

APPENDIX A

A-1. INTRODUCTION.

A-2. The following chapters in this appendix contain certain general and specific HP-IB information. The general information is non-controller dependent but may be dependent on the 3456A. The specific information is controller and/or instrument dependent.

A-3. GENERAL HP-IB DESCRIPTION.

A-4. The Hewlett-Packard Interface Bus (HP-IB) is a carefully defined interface which simplifies the integration of various instruments, calculators, and computers into systems. The interface provides for messages in digital form to be transferred between two or more HP-IB compatible devices. A compatible device can be an instrument, calculator, computer, or peripheral device that is designed to be interfaced using the HP-IB.

A-5. The HP-IB is a parallel bus of 16 active signal lines grouped into three sets, according to function, to interconnect up to 15 instruments. A diagram of the Interface Connections and Bus Structure is in Figure A-1.

A-6 Eight signal lines, termed as DATA lines, are in the first set. The Data lines are used to transmit data in the form of coded messages. These messages are used to program instrument function, transfer measurement data, coordinate instrument operation, and to manage the system. This allows you to set-up the instrument and read its measurement data. Input and output of messages in bit-parallel, byte-serial form are also transferred in the Data lines. A 7-bit ASCII code normally represents each piece of DATA.

A-7. Data is transferred by means of an interlocking "handshake" technique which permits data transfer (asynchronously) at the rate of the slowest active device used in that particular transfer. The three DATA BYTE CONTROL lines coordinate the transfer and form the second set of lines.

A-8. The remaining five GENERAL INTERFACE MANAGEMENT lines are used to manage the devices on the HP-IB. This includes activating all connected devices at once, clearing the interface, and others. A

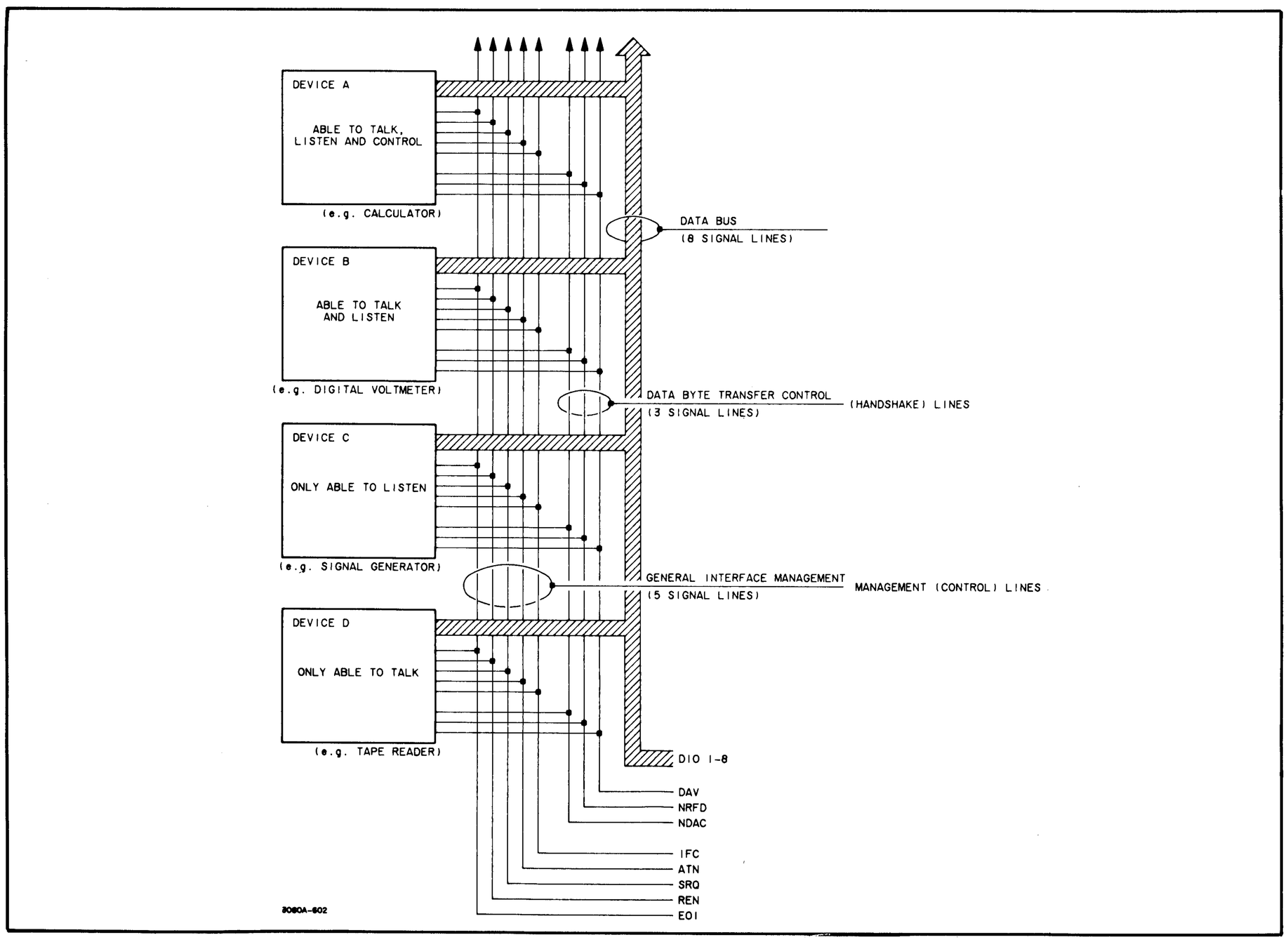

Figure A-1. Interface Connection and Bus Structure.

condensed description of the HP-IB is available in the Condensed Description of the Hewlett-Packard Interface Bus Manual, -hp- Part Number 59401-90030. The manual is available through your nearest -hp- Sales and Service Office.

A-9. HP-IB SYSTEM OVERVIEW.

A-10. The following chapters define the terms and concepts used to describe HP-IB (Bus) system operations.

A-11. HP-IB System Terms.

a. Address: The characters sent by a controlling device to specify which device will send information on the HP-IB and which device(s) will receive that information. Addressing may also be accomplished by hardwiring a device to only send information or only receive information.

b. Byte: A unit of information consisting of 8 binary digits (bits).

c. Device: A unit that is compatible with the IEEE Standard 488-1975.

d. Device Dependent: An action a device performs in response to information sent over the HP-IB. The action is characteristic of an individual device and may vary from device to device.

e. Polling: This process typically is used by a controller to locate a device that needs to interact with the controller. There are two types of polling, as follows:

1. Serial Poll: This method obtains one byte of operational information about an individual device in the system. The process must be repeated for each device from which information is desired.

2. Parallel Poll: This method obtains information about a group of devices simultaneously.

A-12. Basic Device Communication Capabilities.

A-13. Devices which communicate along the interface bus can be classified into three basic categories:

a. Talker: Any device that is able to send information over the HP-IB, when it has been addressed. Only one talker may be active at a time; usually the one that is currently directed to send data. All HP-IB type calculators and computers are generally talkers.

b. Listener: Devices which receive information over the HP-IB, when they have been addressed. A device may or may not be both a talker and a listener. Calculators or computers are generally both a talker and a listener (at different times).

c. Controller: The device that can specify which devices(s) on the Bus is a talker or a listener. There can be two types of controllers, an Active Controller and a System Controller. The Active Controller is the current controlling device. The System Controller can, however, take control of the HP-IB even if it is not the active controller. There can also be only one controller at a time, even if several controllers are on the Bus.

A-14. HP-IB Messages.

A-15. Different types of information can be passed over the HP-IB to one or more devices. Some of this information is in the form of messages, most of which can be separated into two parts. One part can be classified as the address portion specified by the controller and the information that comprises the messages. The second part can be classified as HP-IB management messages. These messages are comprised of twelve messages and are called meta messages. In this manual they are referred to as Bus Messages and are defined as follow.

a. Data: The actual information (binary bytes) sent by a talker to one or more listener. The information (data) can either be in a numeric form or a character string.

b. Trigger: The trigger message causes the listening device or devices to perform a device dependent action when addressed.

c. Clear: The clear message causes the listening device(s) or all of the devices on the HP-IB to return to their predefined device-dependent state.

d. Remote: This message causes the listening device(s) to switch from local front panel control to remote program control when addressed to listen.

e. Local: This message clears the REMOTE message from the listening device(s) and returns the device(s) to local front panel control.

f. Local Lockout: This message prevents a device operator from manually inhibitating remote program control.

g. Clear Lockout and Set Local: With this mesage, all devices are removed from the local lockout mode and revert to local. The remote message is also cleared for all devices.

h. Require Service: A device can send this message at any time to signify the device needs some type of interaction with this controller. The message is cleared by the device's STATUS BYTE message if the device no longer requires service.

i. Status Byte: A byte that represents the status of a single device on the HP-IB. One bit indicates whether the device sent the required service message and the remaining seven bits indicate operational conditions defined by the device. This byte is sent from the talking device in response to a "Serial Poll" operation performed by the controller.

j. Status Bit: A byte that represents the operational conditions of a group of devices on the HP-IB. Each device responds on a particular bit of the byte thus identifying a device dependent condition. This bit is typically sent by devices in response to a parallel poll operation.

k. Pass Control: The bus management responsibility is transferred from the active controller to another controller by this message.

l. Abort: The system controller sends this message to unconditionally assume control of the HP-IB from the active controller. The message will terminate all bus comunication but does not implement the CLEAR message.

A-16. HP-IB WORKSHEET.

A-17. The HP-IB Worksheet (Table A-1) can be used to determine the HP-IB capabilities of the other HP-IB compatible instruments may have. The sheet may be filled in with the Bus messages applicability for your controller and each HP-IB device. The Bus capability of the 3456A has already been filled in. Refer to your controller manual and the manual(s) of your other device(s) for their Bus Messages capabilities. Once the sheet is filled out, you should then have the HP-IB capabilities of your device(s).

Table A-1. HP-IB Worksheet.

MESSAGE	HP-IB BUS IMPLEMENTATION WORKSHEET DEVICE									
INSTRUMENT IDENTIFICATION AND HP-IB ADDRESS	MODEL 3456A					MODEL				
	LISTEN YES					LISTEN				
	TALK YES					TALK				
	5 BIT VALUE 22					5 BIT VALUE				
DATA	S & R									
TRIGGER	R									
CLEAR	R									
LOCAL	R									
REMOTE	R									
LOCAL LOCKOUT	R									
CLEAR LO & SET LOCKOUT	R									
REQUIRE SERVICE	S									
STATUS BYTE	S									
STATUS BIT	N									
PASS CONTROL	N									
ABORT	N									

S = SEND ONLY R = RECEIVE ONLY S & R = SEND AND RECEIVE N = NOT IMPLEMENTED

A-18. UNPACKING PROGRAM.

A-19. The following is an unpacking program used to unpack the 3456A's readings taken in the Packed mode. The program is given in the Enchanced Basic (9835A/B and 9845B Controller) Language.

Unpacking Program

```
10    ! The following program illustrates one method for unpacking data from
20    ! the 3456A.  You can program this routine to take "any" number of readings
30    ! by changing the DIM statement in line 20 , the 3456A programming syntax
40    ! in line 30, and the buffered transfer statement in line 40.  The
50    ! numerical array Out is dimensioned to contain the number of readings that
60    ! will be taken The string variable In$ is dimensioned to 4 times the
70    ! number of readings taken.  That is, a packed reading contains 4 bytes of
80    ! data per reading.
90    !
100   ! In this particular example, the 3456A is programed to the following
110   ! states:
120   ! Function: DCV (F1)
130   ! Data Output Format: Packed (P1)
140   ! Range: Autorange (R1)
150   ! Delay: 0 (0STD)
160   ! Integration Time: .1 Line Cycles (.1STI)
170   ! Number of Readings: 9 (9STN)
180   ! System Output Mode: On (SO1)
190   ! Trigger: Single (T3)
200   !
210   ! You can follow the comment statements on each line of the program to
220   ! understand the basic operation .  Explaining the operation of the
230   ! unpacking subprogram is beyond the scope of this manual.
240   !
250   !
260    OPTION BASE 1  ! Specifies first element in numeric array Out is Out(1).
270    DIM In$[36],Out(9)  ! Dimensions the string variable and numeric array.
280    OUTPUT 722;"P1F1R10STD.1STI9STNSO1T3"  ! Programs the 3456A.
290    ENTER 722 BFHS 36 NOFORMAT;In$ ! Enters 36 data bytes into the string In$.
300    CALL Unpk56(In$,Out(*)) ! Calls Unpacking routine; passes the packed data.
310    FOR I=1 TO 9  ! Sets up loop to print out the number of readings taken.
320    PRINT "NUMBER ";I;" VOLTAGE READING = ";Out(I)
330    NEXT I
340    END
350    SUB Unpk56(In$,Out(*))
360    INTEGER N,J,I,B1,B2,B3,B4
370    N=LEN(In$)
380    J=0
390    FOR I=1 TO N STEP 4
400    J=J+1
410    B1=NUM(In$[I])
420    B2=NUM(In$[I+1])
430    B3=NUM(In$[I+2])
440    B4=NUM(In$[I+3])
450    Out(J)=.1*BIT(B1,0)+.01*SHIFT(B2,4)+.001*BINAND(B2,15)+.0001*SHIFT(B3,4)+.
00001*BINAND(B3,15)+.000001*SHIFT(B4,4)+.0000001*BINAND(B4,15)
460    Out(J)=Out(J)*(1-2*BIT(B1,1))*10↑((1-2*BIT(B1,7))*SHIFT(BINAND(B1,124),2))
470    NEXT I
480    SUBEND
```

A-20. MULTIPLE READING TRANSFER PROGRAMS.

A-21. The following programs show how to transfer multiple readings from the 3456A to the controller. The programs are given in the HPL(9825A Controller) and Enhanced Basic (9835A/B and 9845B Controller) Language. The programs do the following.

a. The 3456A is set up to do this:

1. Clear the 3456A and set SRQ Mask to bit 1 (Program Memory Execution Complete).

2. Enter into memory to enable Reading Storage, select 10 Number of Readings per Trigger, and Single Trigger.

3. Execute Program Memory.

b. Read 3456A Status and remain in a loop until Program Memory has completed its execution.

c. Set up the 3456A to enable its System Output Mode and scroll the internally stored readings starting with #10.

d. Store readings into variables.

HPL Program.

```
0: dim A[10]
1: wrt 722,"HSM002L1RS110STNT3QX1"
2: if rds(722)#66;jmp 0
3: wrt 722,"S01-10STRRER"
4: for I=1 to 10
5: red 722,A[I]
6: next I
7: for I=1 to 10
8: prt A[I]
9: next I
10: end
*22514
```

Enhanced Basic Program

```
10    OPTION BASE 1
20    DIM A(10)
30    OUTPUT 722;"HSM002L1RS110STNT3QX1"
40    STATUS 722;S
50    IF S<>66 THEN GOTO 40
60    OUTPUT 722;"S01-10STRRER"
70    ENTER 722;A(*)
80    MAT PRINT A
90    END
```

A-22. BUS MESSAGE IMPLEMENTATION.

A-23. The following figures provide a description on the implementation of the Bus Messages using the 3456A. The codes used in the figures are:

T = True
F = False
X = Don't Care
oct = Octal Code

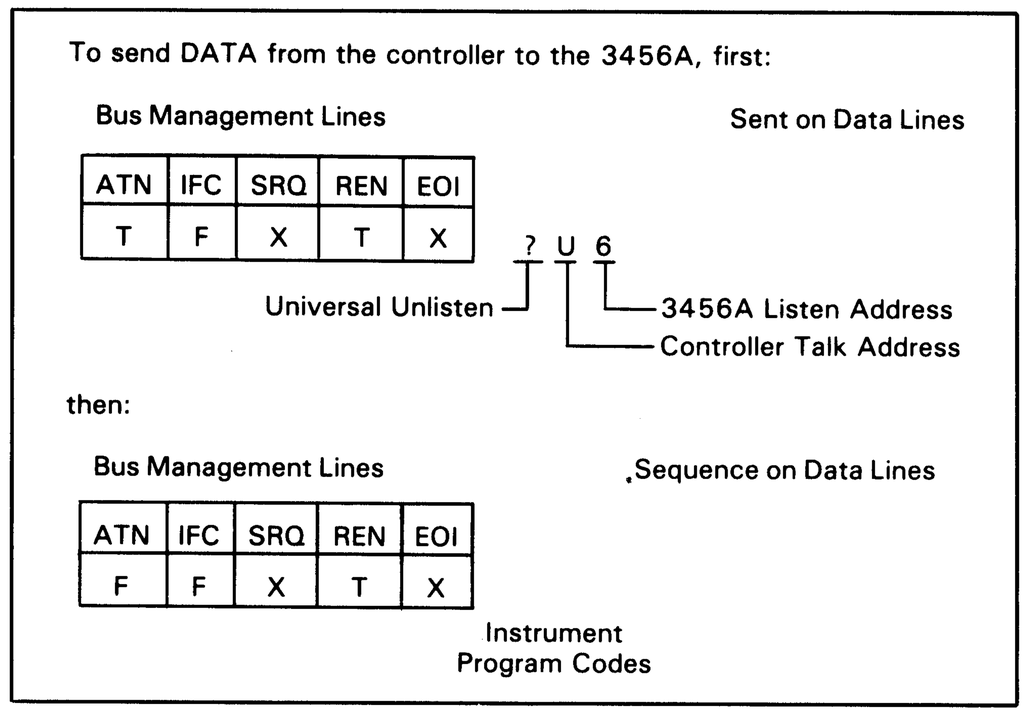

Figure A-2. Data Message (Controller to 3456A).

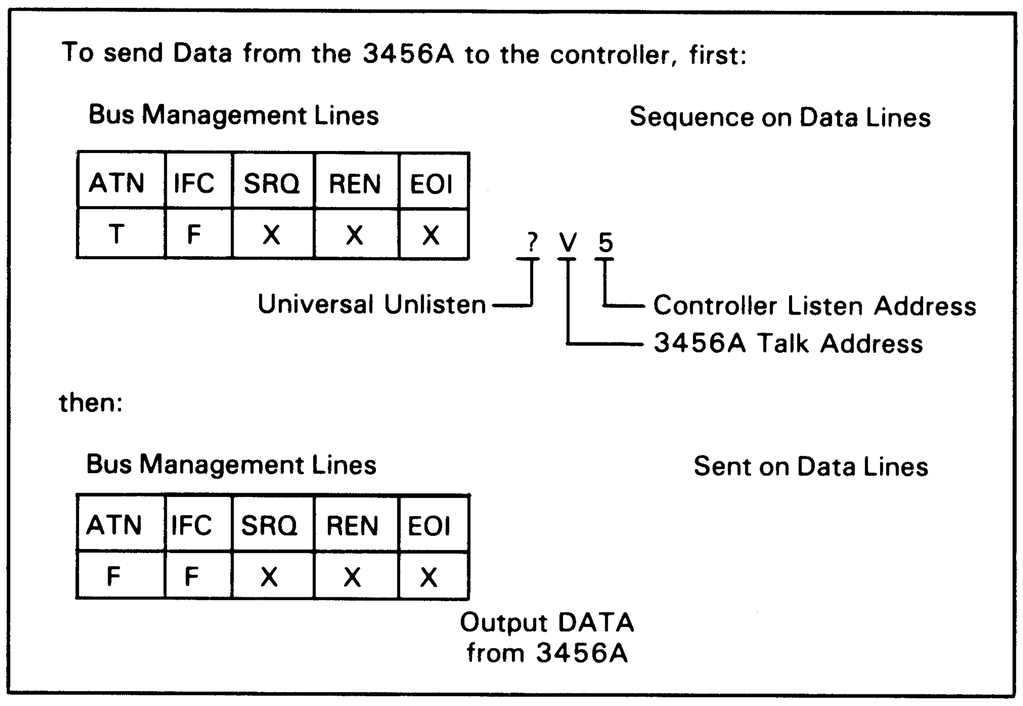

Figure A-3. Data Message (3456A to Controller or Other Device(s).

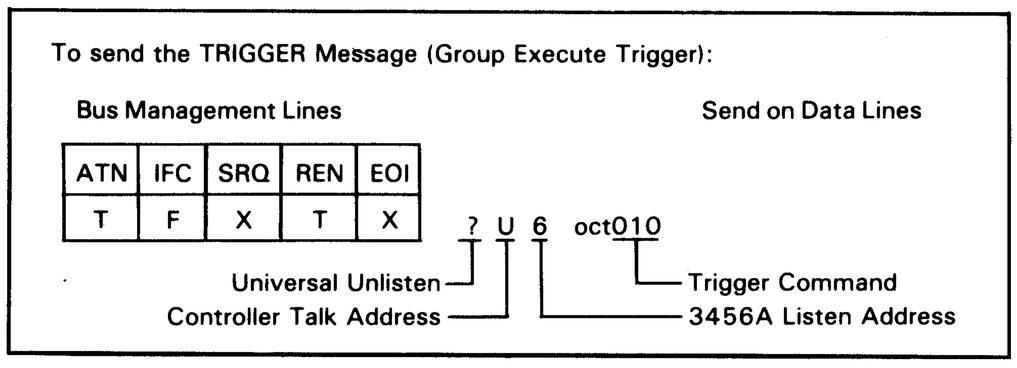

Figure A-4. Trigger Message (from Controller to Device(s)).

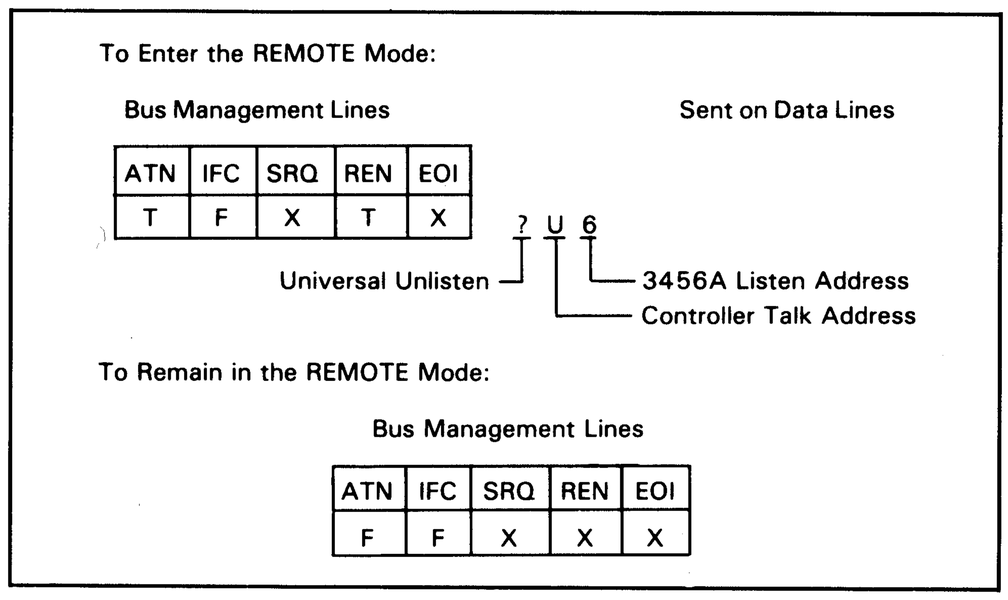

Figure A-5. Remote Message.

To enter the LOCAL Mode:

Bus Management Lines — Sent on Data Lines

ATN	IFC	SRQ	REN	EOI
T	F	X	T	F

? U 6 oct001

- ? — Universal Unlisten
- U — Controller Talk Address
- 6 — 3456A Listen Address
- oct001 — Go to Local instruction

Figure A-6. Local Message.

To enable LOCAL LOCKOUT:

Bus Management Lines — Sent on Data Lines

ATN	IFC	SRQ	REN	EOI
T	F	X	T	F

oct 021 — Local Lockout instruction

to maintain LOCAL LOCKOUT:

Bus Management Lines

ATN	IFC	SRQ	REN	EOI
X	X	X	T	X

Figure A-7. Local Lockout Message.

To CLEAR LOCAL LOCKOUT and set LOCAL:

Bus Management Lines

ATN	IFC	SRQ	REN	EOI
X	X	X	T	X

Figure A-8. Clear Lockout/Set Local Message.

To send REQUIRE SERVICE MESSAGE:

Bus Management Lines

ATN	IFC	SRQ	REN	EOI
X	X	T	X	X

Figure A-9. Require Service Message.

To Serial POLL the 3456A (obtain Status Byte):

Bus Management Lines — Sent on Data Lines

ATN	IFC	SRQ	REN	EOI
T	F	X	X	F

? 6 oct030 V 5

- ? — Universal Unlisten
- 6 — 3456A Listen Address
- oct030 — Serial Poll Enable
- V — 3456A Talk Address
- 5 — Controller Listen Address

then:

Bus Management Lines — Sent on Data Lines

ATN	IFC	SRQ*	REN	EOI
F	F	X	X	F

3456A Status Byte

*If SRQ was true, it will switch to the false state.

and finally:

Bus Management Lines — Sent on Data Lines

ATN	IFC	SRQ	REN	EOI
T	F	F	X	F

oct 031 — Serial Poll Disable

Figure A-10. Status Byte Message.

To send the CLEAR Message:

Bus Management Lines — Sent on Data Lines

ATN	IFC	SRQ	REN	EOI
T	F	X	X	X

oct004 — Clear Command

To send the CLEAR MESSAGE Only to the 3456A:

Bus Management Lines — Sent on Data Lines

ATN	IFC	SRQ	REN	EOI
F	F	X	T	X

? 6 oct 004

- ? — Universal Unlisten
- 6 — 3456A Listen Address
- 004 — Clear Command

Figure A-11. Clear Message.

To send the ABORT Message:

Bus Management Lines

ATN	IFC	SRQ	REN	EOI
X	T	X	X	X

Figure A-12. Abort Message.

APPENDIX B

B-1. FRONT/REAR SWITCH LOCK PROCEDURE.

B-2. The Front/Rear Switch can be locked in either the FRONT or REAR position by the installation of a lock. The following procedures show how to install and remove the lock.

a. Lock Installation Procedure.

1. Locate the front panel section located at the front panel's input terminals.

2. Remove the front panel section by loosening the hold down screws located to the left and right of the panel. (Note: The screws are fastened to the panel section and should not be forced out of the section.)

3. Remove the switch cap from the Front/Rear Switch. The cap can be removed by holding the cap between the index finger and thumb and pulling it away from the switch.

4. Set the Front/Rear Switch to the desired position (FRONT or REAR).

5. Locate the Locking Cap and front panel section. Install the cap into the panel section's slot marked FRONT and REAR until it snaps in place. Make sure the arrow on the cap points to the lettering which corresponds to the Front/Rear Switch position.

6. Reinstall the front panel section into the front panel and tighten the screws.

b. Lock Removal Procedure.

1. Do step a and b of the Lock Installation Procedure.

2. Remove the lock from the front panel section. Do this by squeezing the cap's locking fingers and push the lock out of the slot. A pair of needlenose pliars or something similar can be used.

3. Locate the cap which was removed from the Front/Rear Switch when the lock was installed. Reinstall it on the Front/Rear Switch.

4. Reinstall the front panel section into the front panel and tighten the screws.

APPENDIX C

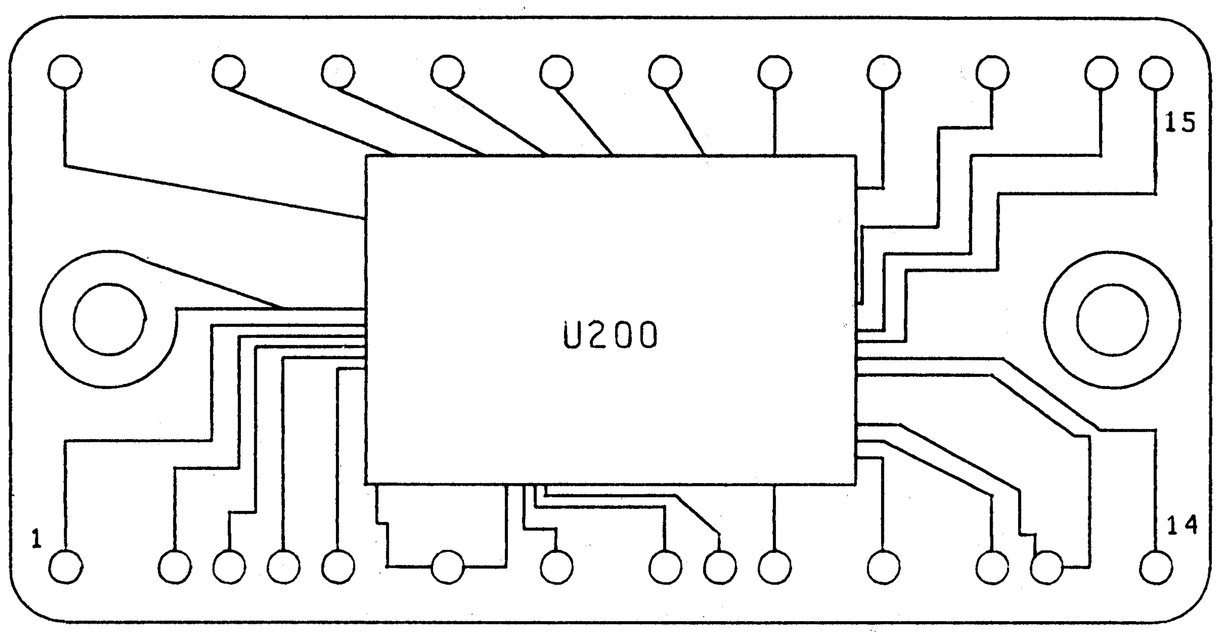

3456-C-1

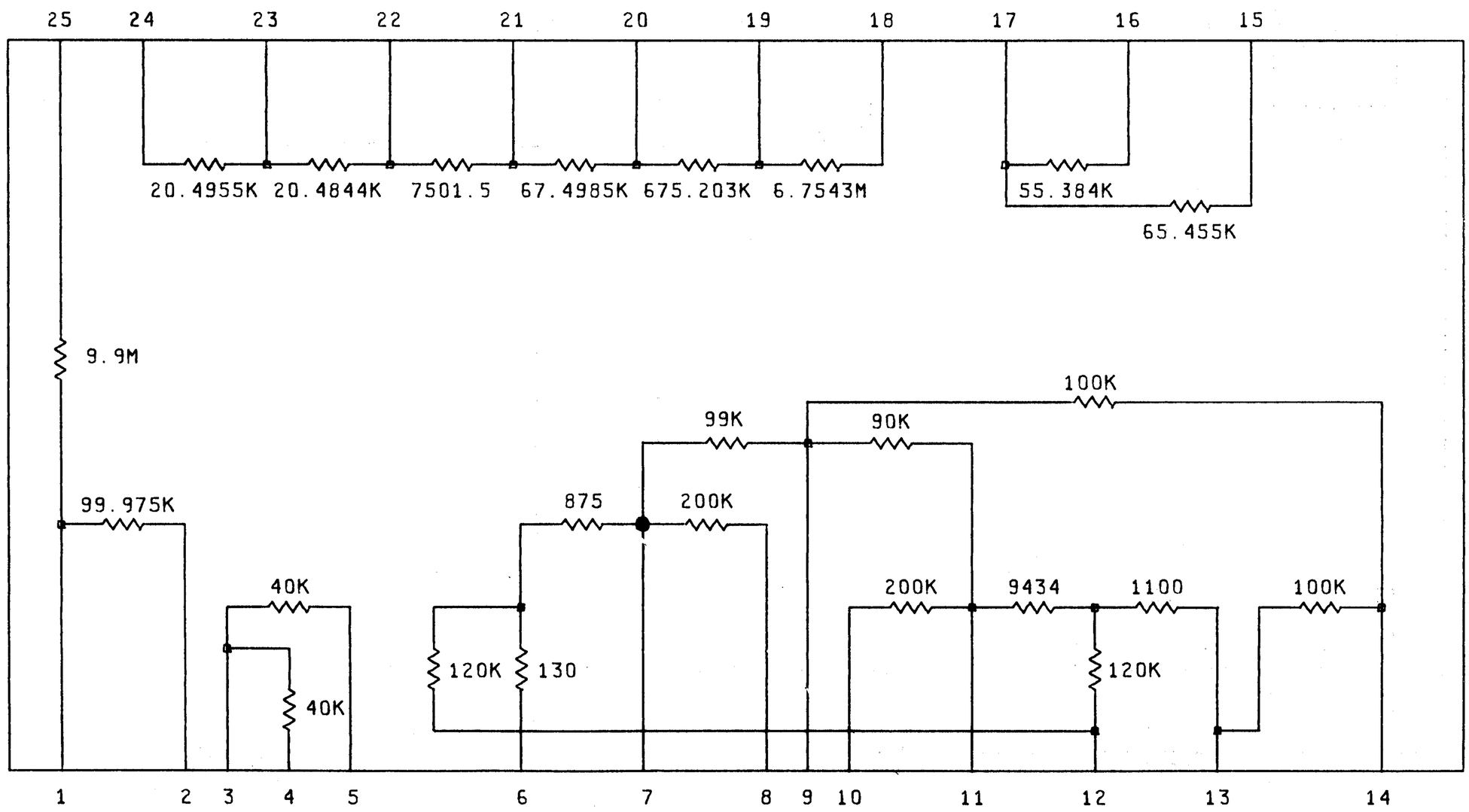

NOTE

The measured value of the Fineline resistors may not be the exact value shown. The Fineline accuracy depends upon the ratio of the resistor values in relation to each other.

Figure C1. A20U200 Signal Conditioning Fineline (1QD4-0044).

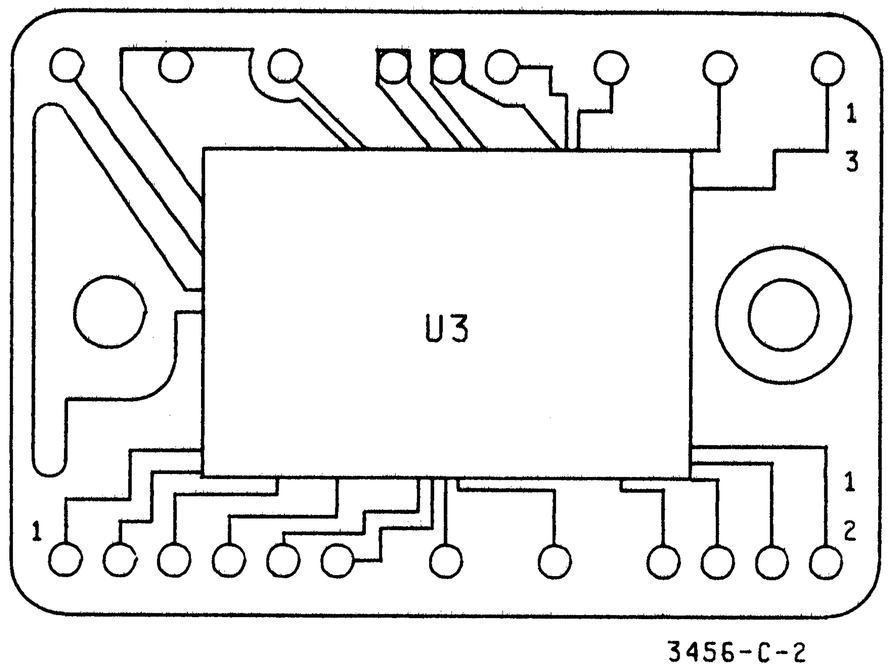

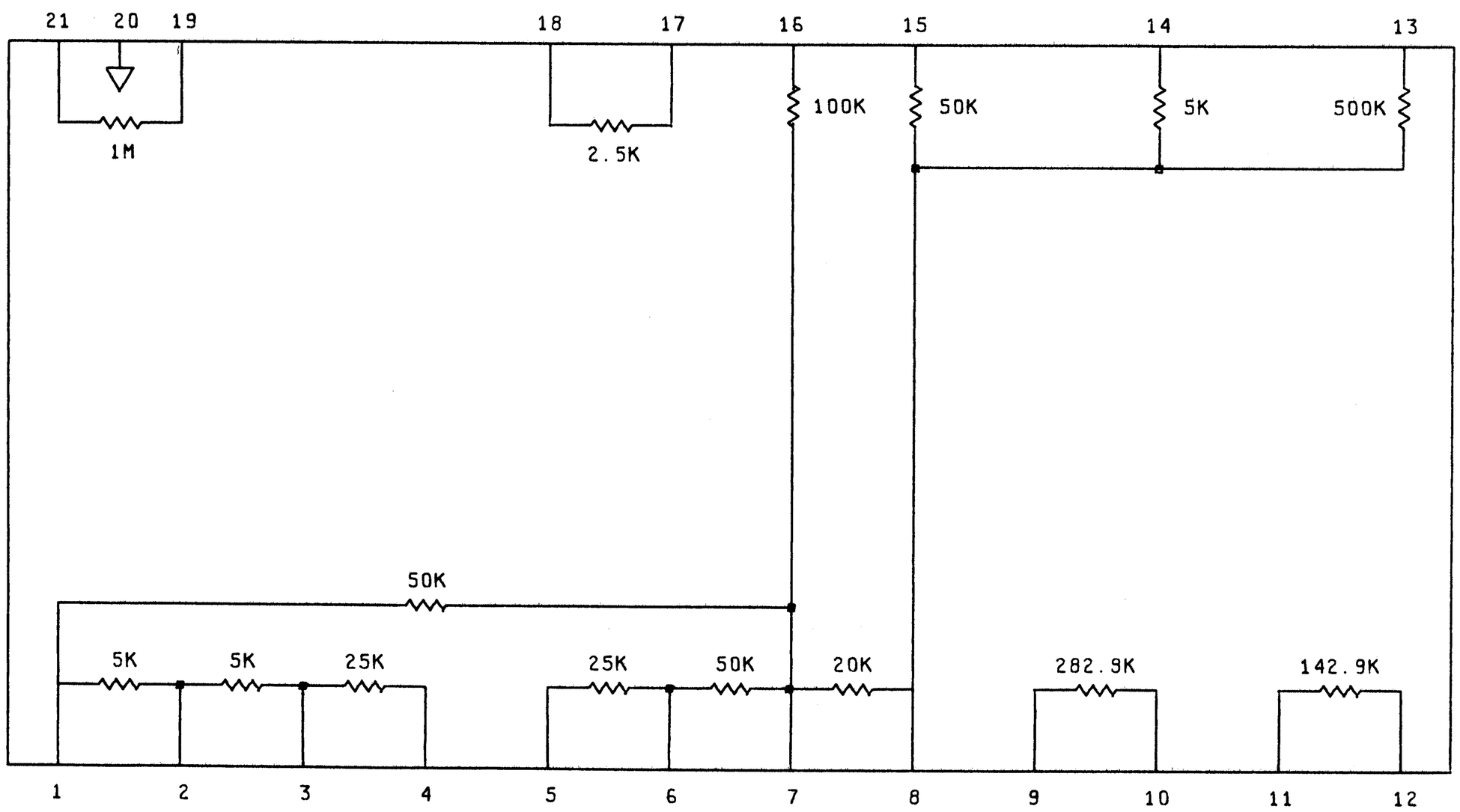

NOTE

The measured value of the Fineline resistors may not be the exact value shown. The Fineline accuracy depends upon the ratio of the resistor values in relation to each other.

Figure C2. A40U3 AC Gain Fineline (1QD6-0046).

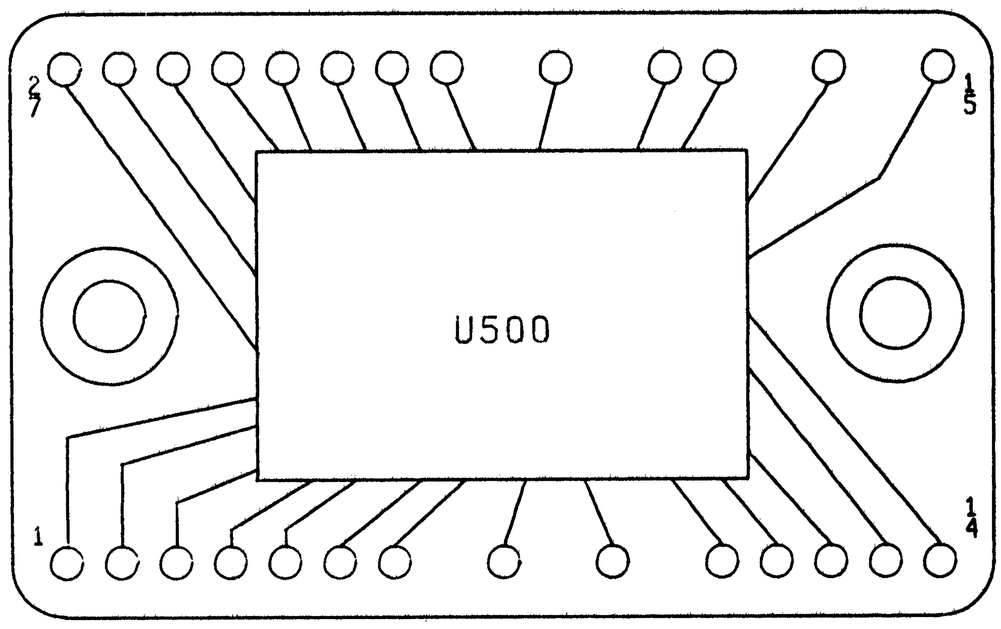

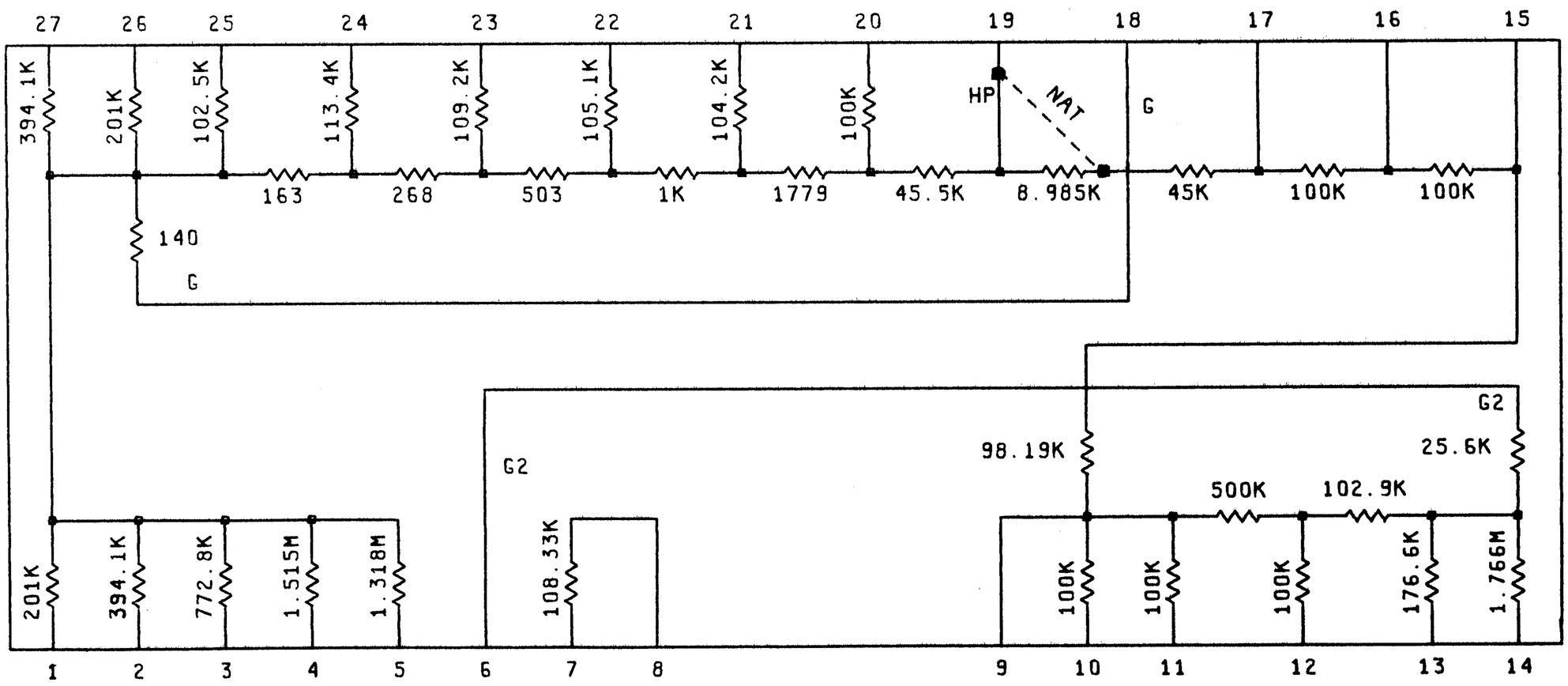

NOTE

The measured value of the Fineline resistors may not be the exact value shown. The Fineline accuracy depends upon the ratio of the resistor values in relation to each other.

Figure C3. A20U500 A/D and Reference Fineline.
(1QD5-0045, used with A24 Ref. Board; 1QE7-0057, used with A25 Ref. Board)

APPENDIX D

INTRODUCTION

The following sections in this appendix contain certain general and specific 3456A Digital Voltmeter information about Remote operation with the 9825 Desktop Computer. Together, these instruments form a powerful measurement system. This guide will use program examples to demonstrate remote control/system programming techniques and general system capabilities as they relate to the 9825 and the 3456A. In doing so, some of the more unique features of the 3456A will be demonstrated.

NOTE

This Appendix can be used with the 9825A, 9825B, 9825S, or 9825T Desktop Computers. Throughout this Appendix the desktop computer will be referred to as just a 9825.

Example Program Summary

- Program 1 shows how to set 3456A functions and have the 3456A return measurement data to the computer.
- Program 2 shows three methods of initiating a group of readings.
- Program 3 demonstrates the 3456A math capabilities.
- Program 4 uses the 3456A internal memory to store readings.
- Program 5 demonstrates how measurement instructions may be stored in the 3456A internal memory.
- Program 6 shows how the 3456A can control the computers operation by signaling the computer to go to a special subroutine when the 3456A front panel button is pressed.
- Program 7 illustrates how the 3456A can signal the computer when the 3456A's programmed measurement instructions have been completed.
- Program 8 uses some special 3456A capabilities to take a burst of high speed measurements.
- Program 9 demonstrates techniques to obtain high data transfer rates (and consequently, high reading rates).

Related Documents

Below is a list of manuals which will provide you with more detailed information on the system components. You may want to refer to these manuals as you go through the example programs.

- 3456A Digital Voltmeter Operating Manual
  (-hp- Part No. 03456-90005)
- 3456A Digital Voltmeter Introductory Users Guide
  (-hp- Part No. 03456-90002)
- Desktop Computer
  9825A or 9825S
  Hewlett-Packard 9825A Desktop Computer
  a.) Operating & Programming
  (-hp Part No. 09825-90000)
  b.) Extended I/O Programming
  (-hp- Part No. 09825-90025)
  c.) General I/O Programming
  (-hp- Part No. 09825-90024)
  d.) Advanced Programming
  (-hp- Part No. 09825-90021)

  9825B or 9825T
  9825B Manual Set
  (-hp- Part No. 09825-87901)
- Tutorial Description of the Hewlett-Packard Interface Bus (-hp- Part No. 59300-90007)

EQUIPMENT REQUIRED

To perform the example programs described in this manual you will need the following equipment and accessories:

1. 3456A Digital Voltmeter

2. Any one of the following desktop computers:
   a.) 9825A with the 98210A String-Advanced Programming ROM and the 98213A, 98214A, or 98216A General I/O Extended I/O ROM.
   b.) 9825S
   c.) 9825B
   d.) 9825T

3. 98034A Interface Card

SET-UP

To connect the system as shown in Figure 1, follow these steps:

1. Turn off power to the 9825.

2. Insert the three ROM's into any of the sockets on the lower front panel (if they are not already inserted).

3. Install the 98034A into any of the three I/O card sockets of the 9825. Be sure the 98034A seats thoroughly. Thorough seating occurs when the latch on top of the interface pops up to lock the card into the socket.

4. The rotary switch on the top of the 98034A is factory pre-set to "7". Set it to 7 if it is set otherwise. Seven is the "select code" for the interface card for all programs in this guide.

5. Attach the 24-pin connector at the free end of the 98034A cable to the rear panel of the 3456A. The connector is tapered to ensure proper connection.

CAUTION

Do not attempt to mate black metric threaded screws on one connector with silver English threaded nuts on another connector, or vice versa, as damage may result. A metric conversion kit which will convert one cable and one or two instruments to metric hardware can be obtained by ordering -hp- Part No. 5060-0138.

6. The 3456A address switches are factory pre-set to binary 0010110 (decimal 22). The address switches are on the rear panel under the HP-IB connector. If the address is different, change it to decimal 22 as shown in Figure 1.

CHECK-OUT

Turn on the 3456A. The DVM's display will flash: HP3456 and then flash: Add 022 0.

If some number other than 022 0 is flashed, check the address switches (Step 6 above). The 3456A should now be triggering internally and displaying the reading. The annunciators for the following states should be on.

FUNCTION ..... DC volts
RANGE ..... AUTO
TRIGGER ..... INTERNAL
AUTO ZERO ..... ON

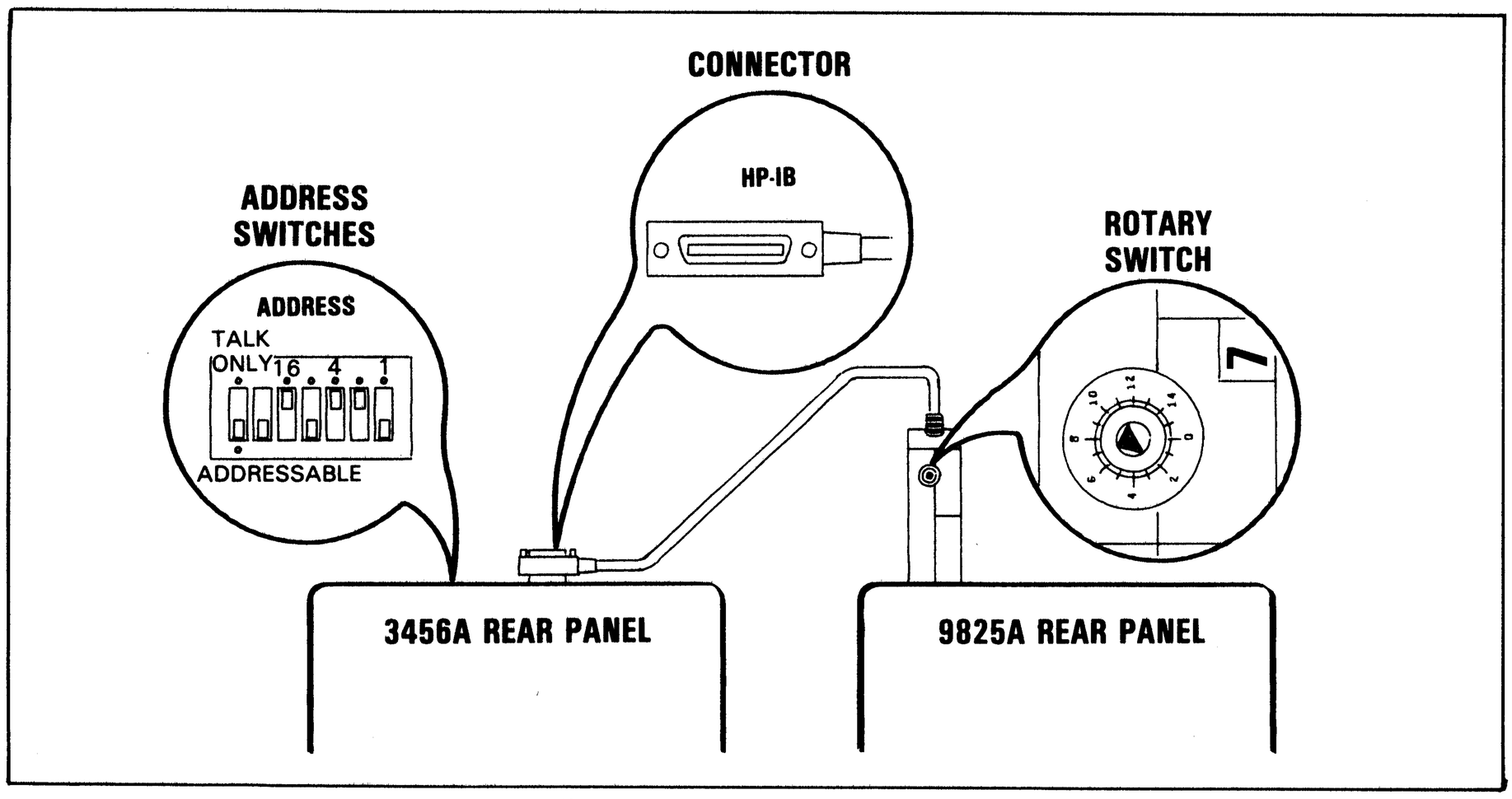

Figure 1. System Connection.

All other annunciators should be off. Press the RESET button on the 3456A. The display should again flash: Add 022 0, and then continue displaying new readings. Remove any connections to the front and rear input terminals and check to be sure that the GUARD switch is in the "IN" position (TO LO). Press the TEST button. The display should be: "+1.8.8.8.8.8.8+8." and all of the annunciators should be lit. The display remains while the voltmeter performs its Internal Test. The LED's go blank for awhile and the test operation starts again. If the internal checks do not pass, a negative integer will be displayed. To disable the test operation press the TEST button a second time.

NOTE

Refer the 3456A to a Service Trained Person if the Internal Test does not pass.

Turn on the 9825 and type in:

rem 722

and press (**EXECUTE**). If the 9825 accepts the remote statement, the "lazy T" (⊢) appears in the computer display. The REMOTE annunciator on the 3456A should go on. If this occurs, go on to the programming examples.

If the 9825 gives an error message, you've probably typed in the remote statement incorrectly or you've forgotten to install the ROMs (error 03). If the 9825 accepts the statement but the 3456A REMOTE annunciator still does not go on, refer to the operating manuals or a Service Trained Person.

PROGRAMMING EXAMPLES

The 3456A Digital Voltmeter should now be interfaced and ready for operation. This subsection and Example Program 1 demonstrate some fundamental 9825/HP-IB functions. If you are already familiar with 9825 and HP-IB operation, go to Example Program 2.

Type into the computer:

wrt 722, "F2Z0"

and press (**EXECUTE**). The voltmeter has been given the instructions as shown below.

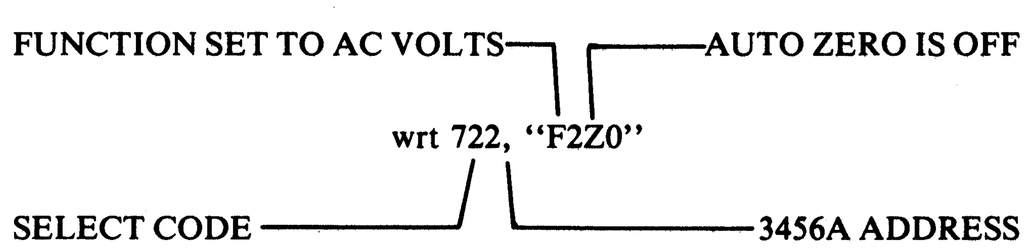

The annunciators should change to:

DC volts ..... OFF
AC volts ..... ON
AUTO ZERO ..... OFF
LISTEN ..... ON
REMOTE ..... ON

The other annunciators should remain the same.

Type into the 9825:

clr 722

and press (**EXECUTE**). The meter returns to the "turn-on" state as previously described in the check-out section. Note that AUTO ZERO is ON, DC volts is ON, and AC volts if OFF.

Example Program 1: Taking a DC Volt Reading

This example shows how to use a program to perform the instrument's operations with the HP-IB. The program clears the 3456A, returns a DC volt reading and displays that reading in the computer's display.

First Press (**ERASE**), enter a, and then press (**EXECUTE**). This clears any previous computer programs. This sequence should be performed before a new program is entered, but not for the program variations where only a line or two of the program will be modified.

Entering a Program Line: Type in the line and press (**STORE**). The line number and adjacent colon should not be typed in. The computer will display the line number and the lazy "T", (⊢) if it accepts the statement.

Enter the program lines shown in Figure 2.

```
0: clr 722
1: red 722,V
2: fxd 4
3: dsp "Voltage is:",V
4: end
*9555
```

Figure 2. Example Program 1a.

Press (**RUN**) to run the program.

Program 1 Explanation:

Line 0: The 3456A is set to its "turn on" state.

Line 1: The computer reads data from the meter and stores it in simple variable V.

Line 2: The computer's display is fixed to 4 places to the right of the decimal. The 3456A sends 7 digits but not all digits will be displayed.

Line 3: The computer displays the statement in quotes and the variable V.

Line 4: The program is terminated.

The REMOTE annunciator on the 3456A should go on when the clear statement is executed. The TALK annunciator should go on as the information is sent out from the 3456A. It will remain on until the 3456A is told to perform a different operation.

Program 1 Variation:

This program can be modified to take an AC + DC voltage measurement. To do this, Line 0 should be changed to:

wrt 722, "F3"

Changing a program line: Press **(FETCH)**, enter 0, and then press **(EXECUTE)**. Line 0 should be in the display. Press **(CLEAR)**, type in the new line, and press **(STORE)**.

Now press **(LIST)** and then **(EXECUTE)**. The computer prints out the stored program. At the end of the program is the "checksum," a unique number for each program. A change of just one program character will yield a different checksum. For this program variation, the checksum should be *2917. If not, check for typing errors.

```
0: wrt 722,"F3"
1: red 722,V
2: fxd 4
3: dsp "Voltage is:",V
4: end
*2917
```

Figure 3. Example Program 1b.

Example Program 2: Triggering Techniques

There are 4 methods of triggering the 3456A. Three of these can be implemented from the desktop computer directly. External triggering involves use of another instrument, for example, the HP-3497A Data Acquisition/ Control Unit. The first method described uses the 3456A's internal triggering capability to load two groups of 10 readings each into the computer. Enter program lines in Figure 4.

```
0: dim A[10],B[10]
1: wrt 722,"HS1F2"
2: dsp "3456A Taking Data"
3: fxd 5
4: for J=1 to 10
5: red 722,A[J]
6: dsp A[J]
7: next J
8: wrt 722,"S0F1"
9: for J=1 to 10
10: red 722,B[J]
11: dsp B[J]
12: next J
13: end
*19216
```

Figure 4. Example Program 2.

Program 2 Explanation:

Line 0: Two arrays are dimensioned to hold 10 readings each.

Line 1: The 3456A is set to internal trigger mode by returning it to its "turn-on" state or home position, "H". The shift function and function 2 are enabled (S1F2), thus setting the 3456A to read AC/DC voltage ratio. For a complete list of 3456A Program Codes, see the last page of this guide.

Line 2: The computer displays the text in quotes.

Line 3: The computer fixes its numerical display to 5 places to the right of the decimal.

Line 4: A 10 count loop is set up.

Line 5: The computer reads in the data from the meter and stores it in array A.

Line 6: The computer displays the data.

Line 7: The loop is performed again.

Line 8: The 3456A is set for DC voltage readings. The shift function must be turned off as well as changing to function 1.

Lines 9-12: Similar to Lines 4-7. The computer reads in and displays the data.

Program 2 Variations:

This method uses the 3456A single trigger mode. The 3456A instructions are sent indicating the number of measurements to be taken for each trigger command (number of readings per trigger). Then a single trigger command is given and the 3456A begins to make the measurements.

Change Line 1 (by the method shown in Example Program 1) to include 3456A instructions for 10 readings per trigger, single trigger.

```
0: dim A[10],B[10]
1: wrt 722,"HS1F210STNT3"
2: dsp "3456A Taking Data"
*31191
```

To obtain a listing of just these lines: Press **(LIST)**, enter 0,2, and press **(EXECUTE)**. The checksums should be identical.

Also change line 8; adding the single trigger command.

```
7: next J
8: wrt 722,"S0F1T3"
9: for J=1 to 10
*32285
```

Run this program variation.

A third triggering technique uses the instrument's hold trigger mode. The instrument must then be given a special HP-IB command to initiate the measurement cycle (trigger the 3456A).

Change Line 1 to enable the 3456A hold trigger mode:

```
0: dim A[10],B[10]
1: wrt 722,"HS1F210STNT4"
2: dsp "3456A Taking Data"
*31077
```

Also, insert the HP-IB trigger command in two places, between lines 3 and 4 and between lines 9 and 10. One trigger command is needed for each group of readings.

Inserting a line: Press **(FETCH)**, enter 4, and press **(EXECUTE)**. Line 4 should be in the computer's display. Press **(CLEAR)** and type in the line to go before Line 4. Press **(INSERT-LINE)**. The result is shown below.

```
3: fxd 5
4: trg 722
5: for J=1 to 10
*13016
```

Perform the same operation to insert the trg 722 command between lines 9 and 10.

Example Program 3: Using a Math Function

Performing statistical calculations on the data, as shown in this example, is just one of the 9 math functions contained within the 3456A. The statistics function allows you to obtain the mean value, the variance, the count (how many readings were taken), and the maximum and minimum values of a group of data. This program will only recall the mean and the variance; the others may be recalled in a similar manner. Enter program lines in Figure 5.

```
0: wrt 722,"HM2.01STI100STNT3"
1: fxd 5;dsp "TAKING DATA";wait 4000
2: wrt 722,"REM"
3: red 722,M
4: prt "MEAN:",M
5: wrt 722,"REV"
6: red 722,V
7: prt "VARIANCE:",V
8: end
*29120
```

Figure 5. Example Program 3.

Program 3 Explanation:

Line 0: The 3456A is set to home position. Math statistics is enabled (M2) with the following conditions: .01 power line cycle integration, 100 readings per trigger, and single trigger. At .01 power line cycle integration, the readings will be made as fast as possible. Refer to the 3456A Operating Manual, page 3-11, paragraph 3-61, 2, for more information on integration times.

Line 1: The computers numerical display is fixed, the quoted text is displayed, and the computer waits 4 secs. for the 3456A to take the readings.

Line 2: The 3456A recalls the mean value of the 100 readings.

Line 3: The computer reads the mean value and stores it in variable M.

Line 4: The computer prints the quoted text and the mean value.

Lines 5,6&7: The variance is recalled, sent to the computer, and printed.

Example Program 4: 3456A Internal Memory – Storing Data

The 3456A has a feature called internal memory which allows you to store measurement results in the instrument. These results may then be recalled and sent to the computer at a later time. This example program uses this feature to store 350 readings without computer interaction. The computer is kept busy in a counting

loop to simulate the time-sharing capabilities of the system. The computer then reads the data after it has finished counting.

The system output mode is enabled when outputting the data so that the readings will be transferred as fast as possible without losing any readings. The system output mode specifies that the instruments "handshake" (signal they are ready) before another reading is taken and output.

```
0: dim V[350]
1: wrt 722,"HRS1350STN.1STIT3"
2: fxd 0
3: for K=1 to 15
4: dsp K;wait 500
5: next K
6: fxd 4
7: wrt 722,"S01-350STRRER"
8: for J=1 to 350
9: red 722,V[J]
10: if frc(J/10)=0;dsp J,":Reading is",V[J]
11: next J
12: end
*8285
```

Figure 6. Example Program 4a.

Program 4 Explanation:

Line 0: An array is dimensioned to hold 350 readings.

Line 1: The 3456A is set to store the DC voltage readings. 350 readings will be taken per trigger at .1 power line cycle integration, single triggering, and system output mode is enabled.

Line 2: The computers numerical display is fixed.

Lines 3,4,5: The computer is placed in a counting loop while the 3456A is taking the readings.

Line 6: The computers numerical display is fixed.

Line 7: These are the necessary commands to recall the stored readings. The minus sign is a required indicator to "scroll" through the readings. The readings are transferred rapidly since the instrument is simply outputting already obtained readings from its internal memory. System output mode is enabled to ensure no readings are lost.

Line 8 A 350 count loop is set up.

Line 9: The readings are sent from the 3456A to the computer and stored in array V.

Line 10: For every J divisible by 10 (no fractional remainder), the corresponding reading will be displayed by the computer, i.e. every 10th reading from 10 to 350.

```
0: dim V[350]
1: wrt 722,"HRS1S01350STN.1STIT3"
2: fxd 0
3: for K=1 to 15
4: dsp K;wait 500
5: next K
6: fxd 4
7: prt "To obtain the 146th reading taken, recall reading #205."
8: wrt 722,"205STRRER"
9: red 722,V[146]
10: dsp "The 146th rdg. taken is:",V[146];wait 2500
11: wrt 722,"RER"
12: red 722,V[147]
13: dsp "The 147th rdg. taken is:",V[147]
14: end
*12192
```

Figure 7. Example Program 4b.

Line 11: The loop is performed again.

Program 4 Variation

A single measurement will be recalled from the 3456A internal memory. Readings are stored in the memory with the most recent reading always being stored in the 3456A memory as reading #1. Since 350 readings are taken in this program, reading #350 is the first reading taken. Reading #1 is the last reading taken. This is a case of FILO; First In, Last Out. This order is important to keep in mind when you're recalling single readings.

Program 4b Explanation:

Lines 0-6: are the same as in Example Program 4a.

Line 7: The computer prints the quoted text.

Line 8: The 3456A recalls reading #205 which is the 146th reading that was made.

Total # of rdgs.	+ 1 -	rdg. desired	=	# req'd for recall stmt.
351	-	146	=	205

Line 9: The computer enters in the reading and stores it in the array.

Line 10: The computer displays the quoted text and the reading.

Line 11: The next reading that was made will be recalled from the 3456A. (A statement like line 8 must have been executed previously.)

Lines 12 & 13: The computer enters and displays the 147th reading that was made.

Example Program 5: 3456A Internal Memory – Storing Program Codes

The 3456A internal memory can store programming codes (measurement instructions) as well as data. These stored instructions can be executed at any time as often as desired. The codes stored in this example illustrate a high speed data acquisition technique; the display is off, auto zero is off, and the fastest integration cycle is implemented. Enter program lines in Figure 8.

```
0: dim A[10],B[10]
1: wrt 722,"L1D0Z0SO1.01STI10STNT3Q"
2: wrt 722,"HX1"
3: fxd 5;dsp "READING DATA"
4: for K=1 to 10
5: red 722,A[K];next K
6: wrt 722,"HF2X1"
7: for K=1 to 10
8: red 722,B[K];next K
9: for K=1 to 10
10: dsp "DC:",A[K],"AC:",B[K];wait 1000
11: next K
12: end
*28223
```

Figure 8. Example Program 5.

Program 5 Explanation:

Line 0: Two arrays are dimensioned to hold 10 readings each.

Line 1: The program codes contained between L1 and Q are stored in the 3456A internal memory.
D0 . Display Off: Displays "HHHHHH", no annunciators lit
Z0 ..... Auto Zero Off
SO1 ..... System Output Mode Enabled
.01STI ..... .01 Power Line Cycle Integration
10STN ..... Ten Readings per Trigger
T3 ..... Single Trigger

Line 2: The 3456A is put in home position and then the stored measurement instructions are executed.

Line 3: The computers numerical display is fixed and the quoted text is displayed.

Lines 4&5: With this loop, the DC voltage measurements are read into array A.

Line 6: The 3456A function is changed to read AC voltage and the stored measurement instructions are executed again.

Lines 7&8: With this loop, the AC voltage measurements are read into array B.

Lines 9,10,&11: Arrays A and B are displayed.

Example Program 6: Require Service Message

In all of the example programs shown so far, the 9825 has been in complete control of the system. Shown in this example program are the capabilities of the 3456A to directly modify the system operation. This is done through the use of the Require Service (RQS) message. This message is sent using the HP-IB line called Service Request (SRQ).

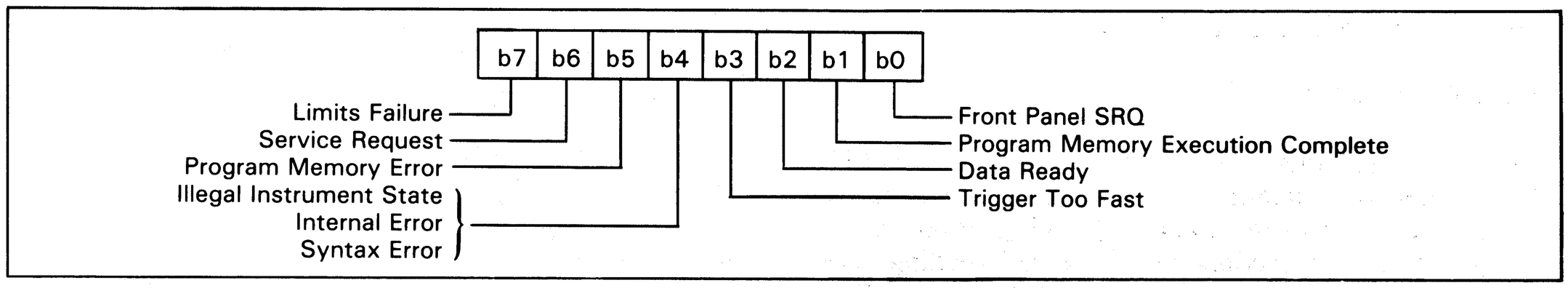

Figure 9. Status Byte.

The 3456A has a pre-defined set of conditions which can modify system operation. Through the use of the SRQ mask, one or more of these conditions are enabled. Enabling the condition means the 3456A will send the RQS message when the condition is met.

If you program more than one condition in Figure 9, you will want to know which condition caused the RQS message to be sent. This information is contained in the instruments Status Byte. The Status Byte is outlined below. A more detailed description of the pre-defined conditions is given at the end of this guide (see "Status Byte Definition" table). The "read status" statement, rds(722)→S, reads the Status Byte and consequently allows you to determine which condition caused the RQS message to be sent.

This program sets the mask to generate the RQS message when the 3456A front panel SRQ button is pressed. The program has a countdown loop simulating the time-sharing capabilities. While the computer is in this loop, press the LOCAL and SRQ buttons. This will interrupt the loop by sending the RQS message. The computer responds by jumping to the interrupt routine where "SERVICE REQUEST on the 3456A" is printed. Then the interrupt routine returns to the main program to continue the interrupted operation. Enter program lines in Figure 10.

Program 6 Explanation:

Line 0: The computer is set to go to "Service Routine" when an interrupt occurs.

Line 1: The interface is enabled to interrupt the main program when the RQS message is received.

Line 2: The 3456A is set to the home position and the SRQ mask is programmed to 001 octal. Consequently, the condition for an interrupt is pressing the front panel SRQ button.

Lines 3,4,5: Countdown loop from 50 to 0. During this loop, press LOCAL and SRQ buttons on the 3456A front panel. This generates an RQS message.

Line 6: The main program is terminated.

Line 7: This is the label for the interrupt routine which follows.

Line 8: This command reads the 3456A Status Byte into variable S. This also resets the instrument for future interrupts.

```
0: oni 7,"Service Routine"
1: eir 7
2: wrt 722,"HSM001"
3: 50→J;fxd 0
4: dsp J-1→J;wait 250
5: if J>0;jmp -1
6: end
7: "Service Routine":
8: rds(722)→S
9: prt "SERVICE REQUEST on the 3456",S;beep;wait 2000
10: eir 7
11: iret
*25015
```

Figure 10. Example Program 6.

Line 9: The quoted text and the decimal equivalent of the Status Byte are printed. This should be 65 since bit 0 and bit 6 should both be high (2^2 + 2^0↑ 64 + 1).

Line 10: The computer's interrupt capability is re-enabled.

Line 11: Returns to the main program and continues execution of the next program line. For example, if the RQS message was received during line 4, line 4 will be completed, the computer will jump to the interrupt routine, and then on execution of this "iret" statement the computer will jump back to line 5.

Example Program 7: Program Memory Execution Complete

A useful feature of the 3456A is its capability to send an RQS message when all of the measurement instructions (program codes) stored in the internal memory have been executed. This allows the computer to load measurement instructions into the 3456A memory, perform other operations and be signaled (via an RQS message) by the 3456A when the data is ready. When a hold trigger command is stored, the 3456A memory will halt execution until an HP-IB trigger is received. In this example, there are 5 hold trigger commands, so 5 HP-IB triggers must be sent from the computer to cause an interrupt. An external trigger command may be used in a similar manner when an external triggering source such as the HP-3497A Data Acquisition/Control Unit is available. Enter program lines in Figure 11.

```
0: oni 7,"Collect Data"
1: dim Z[5]
2: wrt 722,"L1RS1T4F2T4F1T4F2T4F1T4QH1STISM002X1"
3: eir 7
4: for J=1 to 5
5: trg 722;beep;eir 7
6: wait 500;next J
7: dsp "Data has been collected."
8: end
9: "Collect Data":rds(722)→S
10: fxd 5;wrt 722,"-5STRRER"
11: for J=1 to 5;red 722,Z[J];next J
12: for J=1 to 5
13: if bit(0,J);prt "DC:",Z[J]
14: if not bit(0,J);prt "AC:",Z[J]
15: next J
16: eir 7;iret
*27513
```

Figure 11. Example Program 7.

Line 0: The computer is set to go to the interrupt routine labeled "Collect Data" upon receiving an interrupt.

Line 1: Array Z is dimensioned to hold 5 readings.

Line 2: Stored in the 3456A internal memory are the instructions:

Reading Storage on 5 hold trigger commands with alternating DC then AC voltage settings.

The following instructions are also sent:
Home position
1 Power Line Cycle Integration Time
SRQ Mask for enabling Program Memory Execution Complete
Execute the stored program instructions

Line 3: The interrupt is enabled.

Line 4: A 5 count loop is set up.

Line 5: The HP-IB trigger command is sent. Computer beeps and re-enables the interrupt. After a "trg" command, the computer is expecting to read data, so the interrupt must be re-enabled.

Line 6: Wait 1 second for the 3456A to change functions and take a reading. Continue with the loop.

Line 7: The computer displays the quoted text. The interrupt routine should have been executed.

Line 8: The main program is terminated.

Line 9: The interrupt routine is labeled. The Status Byte is read allowing for future interrupts.

Line 10: The computers numerical display is fixed. The 3456A recalls the 5 stored readings (Refer to Example Program 4a, Line 7).

Line 11: The computer reads the data into array Z.

Line 12: A 5 count loop is setup.

Line 13: The odd readings taken were DC values. If J is odd, print the DC reading.

Line 14: The even readings taken were AC values. If J is even, print the AC reading.

Line 15: Loop is continued.

Line 16: The interrupt is re-enabled. Execution is continued in the main program.

Example Program 8: High Speed Data Acquisition

This example, like Example Program 7, uses the 3456A internal memory and Program Memory Execution Complete interrupt capabilities to achieve high speed data acquisition. When less than approximately 350 readings are required, the highest instrument reading rate may be obtained by using the internal memory. Example Program 9 discusses high speed techniques when more than 350 readings are required. Enter program lines in Figure 12.

Program 8 Explanation

Line 0: This statement allows you to enter the desired number of readings. After you press **(RUN)**, type in a number between 100 and 340 and press **(CONTINUE)**.

Line 1: The computer will go to "DATA" upon receiving an interrupt.

Line 2: An array is dimensioned to hold N readings.

Line 3: The 3456A is set for high speed data acquisition:
D0 ..... Display Off
Z0 ..... Auto Zero Off
R4 ... A preset range is faster than auto range since the instrument does not have to determine the proper range.
.01STI .... .01 is the shortest integration time

Also the 3456A stores the readings internally, N readings per trigger, single trigger, sets the SRQ mask for Program Memory Execution Complete, and executes the 3456A stored program codes.

Line 4: Computer enables the interrupt. K is initialized to 0. Flag 1 is set to 1.

Line 5: If flag 1 is 1, the computer executes this count loop. Flag 1 will be cleared in the interrupt routine.

Line 6: If flag 1 is 0, the quoted text is displayed.

Line 7: The main program is terminated.

Line 8: The interrupt routine is labeled.

Line 9: The status Byte is read. Flag 1 is cleared to 0.

Line 10: The 3456A recalls the stored data.

Line 11: The computer reads and displays the data.

Line 12: Execution is returned to the main program.

Example Program 9: High Speed Data Acquisition and Transfer – Unpacking Program

The normal method of sending measurement data requires a total of 14 bytes to be sent for each reading. This is a constraint when trying to take and transfer readings at a high speed since much of the 3456A's processing time is tied up with transmitting the information. A faster method of transferring the data is to use the 3456A's packed data mode. This mode condenses the number of bytes required from 14 to 4.

After the packed data has been read into the desktop computer, the data must be unpacked to put the information into a useable form. The desktop computer further increases the data transfer rate by accepting the packed data into a high speed read/write memory compartment called a buffer. The contents of the 4 bytes used for the packed data mode are shown in Figure 13. Enter program lines in Figure 14.

NOTE

The decimal point in the Packed Format is implied to the Overrange Digit's left.

```
0: ent "Number of Readings?(100<N<340)",N
1: oni 7,"DATA"
2: dim V[N]
3: wrt 722,"L1D0Z0R4.01STIRS1",N,"STNT3QHSM002X1"
4: eir 7;0→K;sfg 1
5: if flg1;dsp K+1→K;wait 200;jmp 0
6: if not flg1;dsp "MEASUREMENTS COMPLETED"
7: end
8: "DATA":
9: rds(722)→S;cfg 1
10: wrt 722,-N,"STRRER";fxd 4
11: for J=1 to N;red 722,V[J];dsp V[J];wait 200;next J
12: iret
*19152
```

Figure 12. Example Program 8.

First Byte

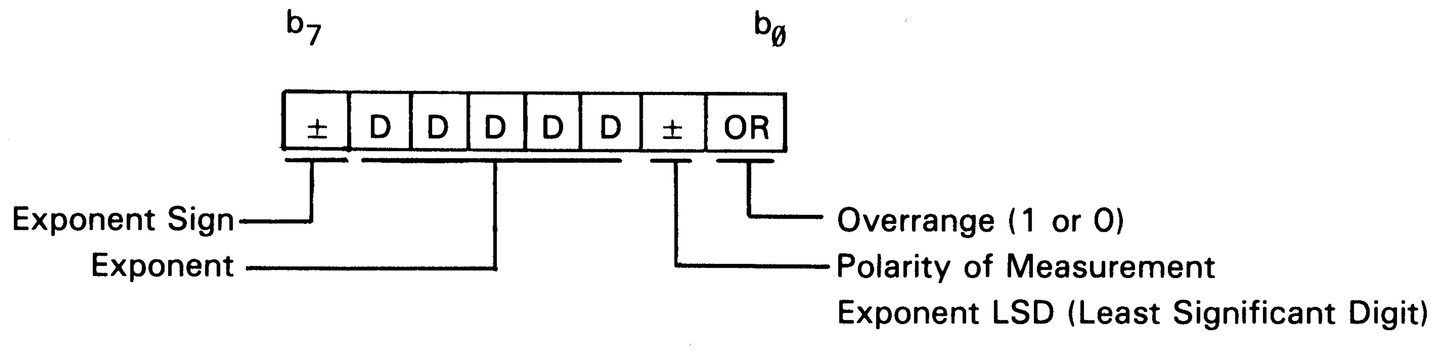

NOTE

The decimal point in the Packed Format is implied to the Overrange Digit's left.

Second Byte

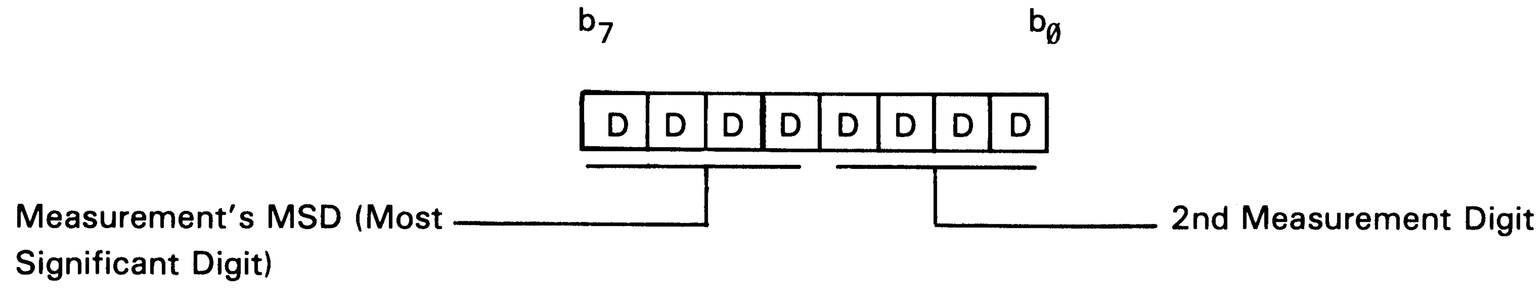

Third Byte

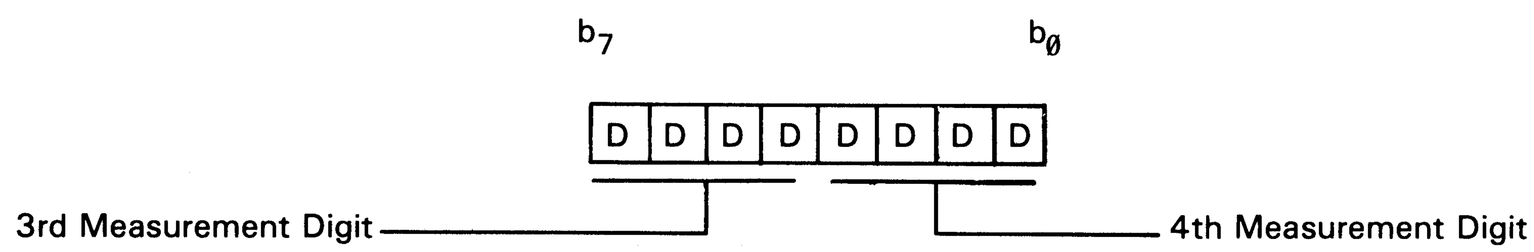

Fourth Byte

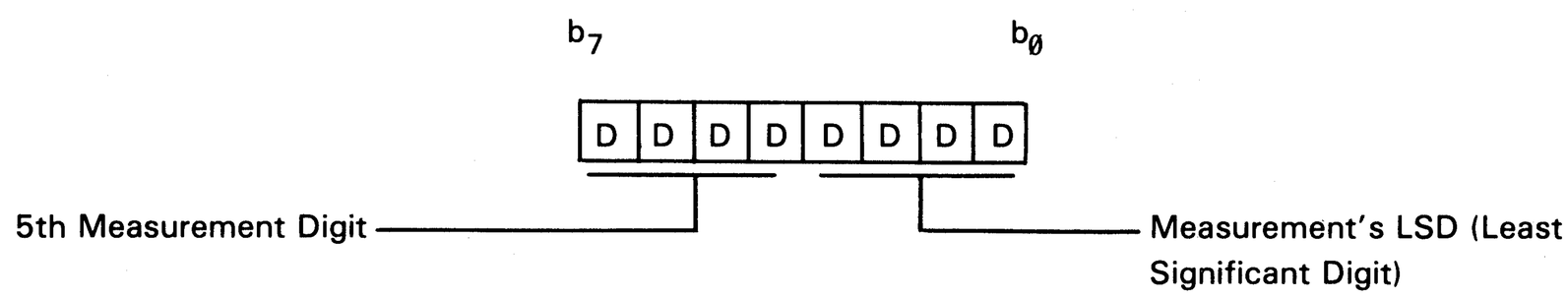

byte.

Figure 13. Packed Data Format.

```
0: ent "Number of Readings?",N
1: dim V[N];N*4+1→S
2: buf "HOLD",S,3
3: wrt 722,"HP1D020R4.01STIS01",N,"STNT3"
4: tfr 722,"HOLD",S
5: rds("HOLD")→U;if U=-1;jmp 0
6: dsp "TRANSFER COMPLETE : DATA UNPACK"
7: "UNPACK":for J=1 to N
8: fmt 4b,z
9: red "HOLD",A,B,C,D
10: shf(B,4)→U;band(B,15)→V
11: shf(C,4)→W;band(C,15)→X
12: shf(D,4)→Y;band(D,15)→Z
13: .1bit(0,A)+.01U+.001V+.0001W+.00001X+.000001Y+.0000001Z→M
14: M(1-2bit(1,A))*10↑((1-2bit(7,A))*shf(band(124,A),2))→V[J]
15: next J
16: for J=1 to N by 20;fxd 3;dsp V[J];wait 200;next J
17: end
*14079
```

Figure 14. Example Program 9.

Program 9 Explanation:

Line 0: This statement allows you to enter in the desired number of readings to be taken. This is limited by the amount the array may hold, a result of the 9825 memory size. For a 9825B or a 9825S (or 9825A with option 002) the maximum number of readings is approximately 1700.

Type in the number and press **(CONTINUE)**.

Line 1: An array is dimensioned for N readings. The size of the buffer is calculated as shown below.

N	*	4	+	1	=	S
# of rdgs.	x	4 bytes/rdg.	+	1 for transmission termination character	=	buffer size

Line 2: The statement specifies the buffer name, size, and type. (For information on buffers refer to i.) 9825B I/O Control Reference - Section 6 or ii.) 9825A Extended I/O Programming - page 71).

Line 3: The 3456A is set for high speed data acquisition, and the system output mode is enabled to ensure no readings are lost.

Line 4: The readings are transferred from the 3456A to the buffer until S bytes are filled.

Line 5: The status of the buffer is read. "-1" is the code which indicates the buffer is busy transferring. The computer remains on this line until the transfer is complete.

Line 6: The computer displays the quoted text.

Line 7: The unpacking routine is labeled. An N count loop is defined.

Line 8: Read/write statements are formatted to accept 4 bytes while suppressing the need for data termination characters.

Line 9: Four bytes are read from the buffer into variables A,B,C,D.

Lines 10,11,&12: The byte is shifted to obtain the last 4 bits which are stored in the variable. A binary AND operation is performed to obtain the first 4 bits which are stored in the variable.

Line 13: The variables are arranged in their proper order forming the base quantity of the number.

Line 14: The base number is multiplied by the appropriate bits of the bytes, calculating the exponents and signs. The final expression is stored in the array.

Line 15: The loop is performed again.

Line 16: The computer displays every 20th reading.

Note that the computer's unpacking routine takes a while to complete. This is the trade-off made when using the packed data mode. In the packed mode, the data is transferred quickly and unpacked slowly. Having the 3456A unpack the data lengthens the time required to output and transfer the data while eliminating the need to unpack it.

FURTHER PROGRAMMING INFORMATION

Additional information on remote programming can be found in the 3456A Operating Manual.

Table 1. 3456A Program Codes.

	Control	Program Code
FUNCTION	Shift Function Off (Unshifted)	S0
	DCV	F1
	ACV	F2
	ACV + DCV	F3
	2 Wire K Ohms	F4
	4 Wire K Ohms	F5
	Shift Function On (Shifted)	S1
	DCV/DCV Ratio	F1
	ACV/DCV Ratio	F2
	ACV + DCV/DCV Ratio	F3
	O.C. 2 Wire K Ohms	F4
	O.C. 4 Wire K Ohms	F5
RANGE	Auto	R1
	100 mV or .1 K Ohms	R2
	1000 mV or 1 K Ohms	R3
	10 V or 10 K Ohms	R4
	100 V or 100 K Ohms	R5
	1000 V or 1 M Ohms	R6
	10 M Ohms	R7
	100 M Ohms	R8
	1000 M Ohms	R9
TRIGGER	Internal	T1
	External	T2
	Single	T3
	Hold	T4
AUTOZERO	On	Z1
	Off	Z0
FILTER	On	FL1
	Off	FL0
TEST	On	TE1
	Off	TE0
REGISTERS	Storing into Registers	ST
	Recalling Registers	RE
	Number of Readings	N
	Number of Digits Displayed	G
	Number of Power Line Cyc. Int.	I
	Delay	D
	Mean Register (Read only)	M
	Varience Register (Read only)	V
	Count Register (Read only)	C
	Lower Register	L
	R Register	R
	Upper Register	U
	Y Register	Y
	Z Register	Z
MATH	Off	M0
	Pass/Fail	M1
	Statistic (Mean, Variance, Count)	M2
	Null	M3
	dBm	M4
	Thermistor (°F)	M5
	Thermistor (°C)	M6
	Scale [(X - Z)/Y]	M7
	%Error [(X - Y)/Y x 100]	M8
	dB (20 Log X/Y)	M9
READING STORAGE	On	RS1
	Off	RS0
SYSTEM OUTPUT MODE	On	SO1
	Off	SO0
DISPLAY	On	D1
	Off	D0
OUTPUT FORMAT	Packed Format On	P1
	Packed Format Off (ASCII Format)	P0
CLEAR-CONTINUE	Active	CL1
NUMERIC SEPARATOR	Separates Numbers (e.g. F1W10STN)	W
HOME COMMAND	Software Reset	H
FRONT/REAR SWITCH SENSE	1 = Front, 0 = Rear	SW1
EOI	Enable	O1
	Disable	O0
PROGRAM MEMORY	Load Program (Syntax) On	L1
	Load Program (Syntax) Off	Q
	Execute Program Memory	X1

Table 2. Status Byte Defintion.

Octal Code	Decimal Code	Bit	Definition
101	65	0	Front Panel SRQ - When the front panel SRQ button is pressed, this Require Service is output. Pressing the button a second time will clear the Service Request.
102	66	1	Program Memory Execution Complete -Indicates to the controller that all the program codes in the 3456A's internal memory are executed. The Require Service condition is cleared when the Program Memory is executed again.
104	68	2	Data Ready - Indicates to the controller that measurement data is ready to be output. The Require Service is cleared when a new measurement cycle is initiated.
110	72	3	Trigger Too Fast - Indicates that the 3456A was triggered while executing a measurement cycle. This only occurs in External Trigger.
120	80	4	Illegal Instrument State - Indicates that the 3456A is unable to do an operation because of an invalid set-up (e.g. 10 M ohm range in DCV) Internal Error - Indicates a failure in the 3456A Syntax Error - Indicates to the controller that invalid Program Code(s) where sent to the 3456A (e.g. code F9)
140	96	5	Program Memory Error - Indicates that the Program Memory Execution command or the Test function was stored in memory, or an overflow of memory occurred while loading into memory.
300	192	7	Limits Failure - Indicates that the Pass/Fail measurement made is out of the selected limits.

Note: Bit 6 is not in this table, because it is the SRQ bit.

SALES & SUPPORT OFFICES

Arranged alphabetically by country

Product Line Sales/Support Key

Key	Product Line
A	Analytical
CM	Components
C	Computer Systems Sales only
CH	Computer Systems Hardware Sales & Services
CS	Computer Systems Software Sales & Services
E	Electronic Instruments & Measurement Systems
M	Medical Products
MP	Medical Products Primary SRO
MS	Medical Products Secondary SRO
P	Personal Computing Products
*	Sales only for specific product line
**	Support only for specific product line

IMPORTANT: These symbols designate general product line capability. They do not insure sales or support availability for all products within a line, at all locations. Contact your local sales office for information regarding locations where HP support is available for specific products.

HP distributors are printed in italics.

ANGOLA
Telectra
Empresa Técnica de Equipamentos Eléctricos, S.A.R.L.
R. Barbosa Rodrigues, 41-I DT.
Caixa Postal 6487
LUANDA
Tel: 35515,35516
E,M,P

ARGENTINA
Hewlett-Packard Argentina S.A.
Avenida Santa Fe 2035
Martinez 1640 **BUENOS AIRES**
Tel: 798-5735, 792-1293
Telex: 122443 AR CIGY
Cable: HEWPACKARG
A,E,CH,CS,P

Biotron S.A.C.I.y.M
Av Paseo Colon 221, 9 Piso
1399 ***BUENOS AIRES***
Tel: 30-4846, 30-1851, 30-8384
Telex: 17595 BION/AR
M

Fate S.A. I.C.I./Electronica
Venezuela 1326
1095 ***BUENOS AIRES***
Tel: 379026, 379027
Telex: 18137, 22754 ALVAR AR
P

AUSTRALIA

Adelaide, South Australia Office
Hewlett-Packard Australia Pty.Ltd.
153 Greenhill Road
PARKSIDE, S.A. 5063
Tel: 272-5911
Telex: 82536
Cable: HEWPARD Adelaide
A*,CH,CM,,E,MS,P

Brisbane, Queensland Office
Hewlett-Packard Australia Pty.Ltd.
5th Floor
Teachers Union Building
495-499 Boundary Street
SPRING HILL, Queensland 4000
Tel: 229-1544
Telex: 42133
Cable: HEWPARD Brisbane
A,CH,CM,,E,MS,P

Canberra, Australia Capital Territory Office
Hewlett-Packard Australia Pty.Ltd.
121 Wollongong Street
FYSHWICK, A.C.T. 2609
Tel: 80 4244 Telex: 62650
Cable: HEWPARD Canberra
A*CH,CM,E,MS,P

Melbourne, Victoria Office
Hewlett-Packard Australia Pty.Ltd.
31-41 Joseph Street
BLACKBURN, Victoria 3130
Tel: 89-6351
Telex: 31-024
Cable: HEWPARD Melbourne
A,CH,CM,CS,E,MS,P

Perth, Western Australia Office
Hewlett-Packard Australia Pty.Ltd.
141 Stirling Highway
NEDLANDS, W.A. 6009
(effective 28 Sept. 1981:
261 Stirling Highway
CLAREMONT, W.A. 6010)
Tel: 386-5455
Telex: 93859
Cable: HEWPARD Perth
A,CH,CM,,E,MS,P

Sydney, New South Wales Office
Hewlett-Packard Australia Pty.Ltd.
17-23 Talavera Road
P.O. Box 308
NORTH RYDE, N.S.W. 2113
Tel: 887-1611
Telex: 21561
Cable: HEWPARD Sydney
A,CH,CM,CS,E,MS,P

AUSTRIA
Hewlett-Packard Ges.m.b.h.
Grottenhofstrasse 94
Verkaufsburo Graz
A-8052 **GRAZ**
Tel: 21-5-66
Telex: 32375
CH,CM,E*

Hewlett-Packard Ges.m.b.h.
Wehlistrasse 29
P.O. Box 7
A-1205 **VIENNA**
Tel: (222) 35-16-210
Telex: 135823/135066
A,CH,CM,CS,E,MS,P

BAHRAIN
Green Salon
P.O. Box 557
BAHRAIN
Tel: 25503-250950
Telex: 84419
P

Wael Pharmacy
P.O. Box 648
BAHRAIN
Tel: 256123
Telex: 8550 WAEL GJ
M

BELGIUM
Hewlett-Packard Belgium S.A./N.V.
Blvd de la Woluwe, 100
Woluwedal
B-1200 ***BRUSSELS***
Tel: (02) 762-32-00
Telex: 23-494 paloben bru
A,CH,CM,CS,E,MP,P

BRAZIL
Hewlett-Packard do Brasil I.e.C. Ltda.
Alameda Rio Negro, 750
ALPHAVILLE 06400 Barueri SP
Tel: 421-1311
Telex: 011 33872
Cable: HEWPACK Sao Paulo
A,CH,CM,CS,E,MS

Hewlett-Packard do Brasil I.e.C. Ltda.
Avenida Epitacio Pessoa, 4664
22471 **RIO DE JANEIRO**-RJ
Tel: 286-0237
Telex: 021-21905 HPBR-BR
Cable: HEWPACK Rio de Janeiro
A,CH,CM,E,MS,P*

CANADA

Alberta
Hewlett-Packard (Canada) Ltd.
210, 7220 Fisher Street S.E.
CALGARY, Alberta T2H 2H8
Tel: (403) 253-2713
A,CH,CM,E*,MS,P*

Hewlett-Packard (Canada) Ltd.
11620A-168th Street
EDMONTON, Alberta T5M 3T9
Tel: (403) 452-3670
A,CH,CM,CS,E,MS,P*

British Columbia
Hewlett-Packard (Canada) Ltd.
10691 Shellbridge Way
RICHMOND, British Columbia V6X 2W7
Tel: (604) 270-2277
Telex: 610-922-5059
A,CH,CM,CS,E*,MS,P*

Manitoba
Hewlett-Packard (Canada) Ltd.
380-550 Century Street
WINNIPEG, Manitoba R3H 0Y1
Tel: (204) 786-6701
A,CH,CM,E,MS,P*

New Brunswick
Hewlett-Packard (Canada) Ltd.
190 Wilbur Street
MONCTON, New Brunswick E2B 2VQ
Tel: (506) 386-1677
Telex: 01931470
CH**

Nova Scotia
Hewlett-Packard (Canada) Ltd.
P.O. Box 931
900 Windmill Road
DARTMOUTH, Nova Scotia B2Y 3Z6
Tel: (902) 469-7820
Telex: 01931470
CH,CM,CS,E*,MS,P*

Ontario
Hewlett-Packard (Canada) Ltd.
552 Newbold Street
LONDON, Ontario N6E 2S5
Tel: (519) 686-9181
Telex: 610-352-1201
A,CH,CM,E*,MS,P*

Hewlett-Packard (Canada) Ltd.
6877 Goreway Drive
MISSISSAUGA, Ontario L4V 1M8
Tel: (416) 678-9430
Telex: 610-492-4246
A,CH,CM,CS,E,MP,P

Hewlett-Packard (Canada) Ltd.
2670 Queensview Dr.
OTTAWA, Ontario K2B 8K1
Tel: (613) 820-6483
Telex: 610-563-1636
A,CH,CM,CS,E*,MS,P*

Quebec
Hewlett-Packard (Canada) Ltd.
17500 South Service Road
Trans-Canada Highway
KIRKLAND, Quebec H9J 2M5
Tel: (514) 697-4232
Telex: 05821521
A,CH,CM,CS,E,MP,P*

Hewlett-Packard (Canada) Ltd.
Les Galeries du Vallon
2323 Boulevard du Versant Nord
STE. FOY, Quebec G1N 4C2
Tel: (418) 687-4570
CH

CHILE
Jorge Calcagni y Cia. Ltda.
Arturo Burhle 065
Casilla 16475
SANTIAGO 9
Tel: 222-0222
Telex: Public Booth 0001
A,CM,E,M

Olympia (Chile) Ltd.
Rodrico de Araya 1045
Casilla 256-V
SANTIAGO 21
Tel: 225-5044
Telex: 40565 OLYMP CL
C,P

CHINA, People's Republic of
CEIEC Inc.
44 Beiwei Rd.
***BEIJING**, China*
Telex: 22475 CEIEC CN
A,CH,CM,CS,E,P

COLOMBIA
Instrumentación
H. A. Langebaek & Kier S.A.
Apartado Aéreo 6287
***BOGOTÁ** 1, D.E.*
Carrera 7 No. 48-75
***BOGOTA**, 2 D.E.*
Tel: 287-8877
Telex: 44400
Cable: AARIS Bogota
A,CM,E,M,P

COSTA RICA
Cientifica Costarricense S.A.
Avenida 2, Calle 5
San Pedro de Montes de Oca
Apartado 10159
SAN JOSÉ
Tel: 24-38-20, 24-08-19
Telex: 2367 GALGUR
CM,E,M

CYPRUS
Telerexa Ltd.
P.O. Box 4809
14C Stassinos Avenue
NICOSIA
Tel: 62698
Telex: 2894 Levidocy
E,M,P

CZECHOSLOVAKIA
Hewlett-Packard
Obchodni Zastupitelstvi v CSSR
Post. schranka 27
CS-118 01 ***PRAHA 011***
Tel: 66-296
Telex: 121353 IHC

DENMARK
Hewlett-Packard A/S
Datavej 52
DK-3460 **BIRKEROD**
Tel: (02) 81-66-40
Telex: 37409 hpas dk
A,CH,CM,CS,E,MS,P

Hewlett-Packard A/S
Navervej 1
DK-8600 **SILKEBORG**
Tel: (06) 82-71-66
Telex: 37409 hpas dk
CH,CM,E

ECUADOR
CYEDE Cia. Ltda.
Avenida Eloy Alfaro 1749
Casilla 6423 CCI
QUITO
Tel: 450-975, 243-052
Telex: 2548 CYEDE ED
A,CM,E,P

Hospitalar S.A.
Robles 625
Casilla 3590
QUITO
Tel: 545-250, 545-122
Telex: 2485 HOSPTL ED
Cable: HOSPITALAR-Quito
M

EGYPT
International Engineering Associates
24 Hussein Hegazi Street
Kasr-el-Aini
CAIRO
Tel: 23-829
Telex: 93830
CH,CS,E,M

Informatic For Systems
22 Talaat Harb Street
CAIRO
Tel: 759006
Telex: 93938 FRANK UN
CH,CS,P

Egyptian International Office for Foreign Trade
P.O.Box 2558
CAIRO
Tel: 984935
Telex: 93337 EGPOR
P

EL SALVADOR
IPESA de El Salvador S.A.
Boulevard de los Heroes 1148
SAN SALVADOR
Tel: 252787, 259621
Telex: Public Booth 20107
A,CH,CM,CS,E,P

FINLAND
Hewlett-Packard Oy
Revontulentie 7
SF-02100 **ESPOO** 10
Tel: (90) 455-0211
Telex: 121563 hewpa sf
A,CH,CM,CS,E,MS,P

SALES & SUPPORT OFFICES
Arranged alphabetically by country

FRANCE
Hewlett-Packard France
Le Ligoures
Bureau de Vente de Aix-en-Provence
Place Romée de Villeneuve
F-13090 **AIX-EN-PROVENCE**
Tel: (42) 59-41-02
Telex: 410770F
A,CH,CM,E,MS,P*

Hewlett-Packard France
Boite Postale No. 503
F-25026 **BESANCON**
28 Rue de la Republique
F-25000 **BESANCON**
Tel: (81) 83-16-22
CH,M

Hewlett-Packard France
Bureau de Vente de Lyon
Chemin des Mouilles
Boite Postale No. 162
F-69130 **ECULLY** Cédex
Tel: (78) 33-81-25
Telex: 310617F
A,CH,CM,CS,E,MP

Hewlett-Packard France
Immeuble France Evry
Tour Lorraine
Boulevard de France
F-91035 **EVRY** Cédex
Tel: (60) 77-96-60
Telex: 692315F
CM,E

Hewlett-Packard France
5th Avenue Raymond Chanas
F-38320 **EYBENS**
Tel: (76) 25-81-41
Telex: 980124 HP GRENOB EYBE
CH,CM

Hewlett-Packard France
Bâtiment Ampère
Rue de la Commune de Paris
Boite Postale 300
F-93153 **LE BLANC MESNIL**
Tel: (01) 865-44-52
Telex: 211032F
CH,CM,CS,E,MS

Hewlett-Packard France
Le Montesquieu
Avenue du President JF Kennedy
F-33700 **MERIGNAC**
Tel: (56) 34-00-84
Telex: 550105F
CH,CM,E,MS

Hewlett-Packard France
32 Rue Lothaire
F-57000 **METZ**
Tel: (87) 65-53-50
CH,CM

Hewlett-Packard France
3 Rue Julien Videment
F-44200 **NANTES**
Tel: (40) 48-09-44
CH**

Hewlett-Packard France
Zone Industrielle de Courtaboeuf
Avenue des Tropiques F-91947 Les Ulis Cédex **ORSAY**
Tel: (1) 907-78-25
Telex: 600048F
A,CH,CM,CS,E,MP,P

Hewlett-Packard France
Paris Porte-Maillot 13, 15 25
Boulevard De L'Amiral Bruix
F-75782 **PARIS** Cédex 16
Tel: (01) 502-12-20
Telex: 613663F
CH,CM,MS,P

Hewlett-Packard France
2 Allee de la Bourgonette
F-35100 **RENNES**
Tel: (99) 51-42-44
Telex: 740912F
CH,CM,E,MS,P*

Hewlett-Packard France
98 Avenue de Bretagne
F-76100 **ROUEN**
Tel: (35) 63-57-66 CH**,CS

Hewlett-Packard France
4 Rue Thomas Mann
Boite Postale 56
F-67200 **STRASBOURG**
Tel: (88) 28-56-46
Telex: 890141F
CH,CM,E,MS,P*

Hewlett-Packard France
20 Chemin de la Cépière
F-31081 **TOULOUSE** Cédex
Tel: (61) 40-11-12
Telex: 531639F
A,CH,CM,CS,E,P*

Hewlett-Packard France
Bureau de Vente de Lille
Immeuble Péricentre
Rue Van Gogh
F-59650 **VILLENEUVE D'ASQ**
Tel: (20) 91-41-25
Telex: 160124F
CH,CM,E,MS,P*

GERMAN FEDERAL REPUBLIC
Hewlett-Packard GmbH
Technisches Büro Berlin
Keithstrasse 2-4
D-1000 **BERLIN** 30
Tel: (030) 24-90-86
Telex: 018 3405 hpbln d
A,CH,CM,E,M,P,X

Hewlett-Packard GmbH
Technisches Büro Böblingen
Herrenberger Strasse 110
D-7030 **BÖBLINGEN**
Tel: (07031) 667-1
Telex: 07265739 bbn or 07265743
A,CH,CM,CS,E,MP,P

Hewlett-Packard GmbH
Technisches Büro Dusseldorf
Emanuel-Leutze-Strasse 1
D-4000 **DUSSELDORF**
Tel: (0211) 5971-1
Telex: 085/86 533 hpdd d
A,CH,CM,CS,E,MS,P

Hewlett-Packard GmbH
Vertriebszentrale Frankfurt
Berner Strasse 117
Postfach 560 140
D-6000 **FRANKFURT** 56
Tel: (0611) 50-04-1
Telex: 04 13249 hpffm d
A,CH,CM,CS,E,MP,P

Hewlett-Packard GmbH
Technisches Büro Hamburg
Kapstadtring 5
D-2000 **HAMBURG** 60
Tel: (040) 63804-1
Telex: 21 63 032 hphh d
A,CH,CM,CS,E,MS,P

Hewlett-Packard GmbH
Technisches Büro Hannover
Am Grossmarkt 6
D-3000 **HANNOVER** 91
Tel: (0511) 46-60-01
Telex: 092 3259
A,CH,CM,E,MS,P

Hewlett-Packard GmbH
Technisches Büro Mannheim
Rosslauer Weg 2-4
D-6800 **MANNHEIM**
Tel: (621) 70050
Telex: 0462105
A,C,E

Hewlett-Packard GmbH
Technisches Büro Neu Ulm
Messerschmittstrasse 7
D-7910 **NEU ULM**
Tel: 0731-70241
Telex: 712816 HP ULM-D
A,C,E*

Hewlett-Packard GmbH
Technisches Büro Nürnberg
Neumeyerstrasse 90
D-8500 **NÜRNBERG**
Tel: (0911) 56-30-83
Telex: 0623 860
CH,CM,E,MS,P

Hewlett-Packard GmbH
Technisches Büro München
Eschenstrasse 5
D-8021 **TAUFKIRCHEN**
Tel: (089) 6117-1
Telex: 0524985
A,CH,CM,E,MS,P

GREAT BRITAIN
Hewlett-Packard Ltd.
Trafalgar House
Navigation Road
ALTRINCHAM
Chesire WA14 1NU
Tel: (061) 928-6422
Telex: 668068
A,CH,CS,E,M

Hewlett-Packard Ltd.
Oakfield House, Oakfield Grove
Clifton
BRISTOL BS8 2BN
Tel: 36806
Telex: 444302
CH,CM,M,P

Hewlett-Packard Ltd.
14 Wesley Street
CASTLEFORD
Yorkshire WF10 1AE
Tel: (0977) 550016
Telex: 5557355
CH

Hewlett-Packard Ltd.
Fourier House
257-263 High Street
LONDON COLNEY
Herts., AL2 1HA
Tel: (0727) 24400
Telex: 1-8952716
CH,CS,E

Hewlett-Packard Ltd
Tradax House, St. Mary's Walk
MAIDENHEAD
Berkshire, SL6 1ST
Tel: (0628) 39151
CH,CS,E,P

Hewlett-Packard Ltd.
308/314 Kings Road
READING, Berkshire
Tel: 61022
Telex: 84-80-68
CM,P

Hewlett-Packard Ltd.
Quadrangle
106-118 Station Road
REDHILL, Surrey
Tel: (0737) 68655
Telex: 947234 CH,CS,E

Hewlett-Packard Ltd.
Westminster House
190 Stratford Road
SHIRLEY, Solihull
West Midlands B90 3BJ
Tel: (021) 7458800
Telex: 339105
CH

Hewlett-Packard Ltd.
King Street Lane
WINNERSH, Wokingham
Berkshire RG11 5AR
Tel: (0734) 784774
Telex: 847178
A,CS,E,M

GREECE
Kostas Karaynnis S.A.
8 Omirou Street
***ATHENS** 133*
Tel: 32-30-303, 32-37-371
Telex: 21 59 62 RKAR GR
A,CH,CM,CS,E,M,P

PLAISIO S.A.
G. Gerardos
24 Stournara Street
ATHENS
Tel: 36-11-160
Telex: 21 9492
P

GUATEMALA
IPESA
Avenida Reforma 3-48
GUATEMALA 9
Tel: 316627, 314786
Telex: 4192 TELETRO GU
A,CH,CM,CS,E,M,P

HONG KONG
Hewlett-Packard Hong Kong, Ltd.
G.P.O. Box 795
5th Floor, Sun Hung Kai Centre
30 Harbour Road
HONG KONG
Tel: 5-8323211
Telex: 66678 HEWPA HX
Cable: HP ASIA LTD Hong Kong
E,CH,CS,P

Schmidt & Co. (Hong Kong) Ltd.
Wing On Centre, 28th Floor
Connaught Road, C.
HONG KONG
Tel: 5-455644
Telex: 74766 SCHMX HX
A,M

ICELAND
Elding Trading Company Inc.
Hafnarnvoli-Tryggvagotu
P.O. Box 895
IS-REYKJAVIK
Tel: 1-58-20, 1-63-03
M

INDIA
Blue Star Ltd.
11 Magarath Road
***BANGALORE** 560 025*
Tel: 55668
Telex: 0845-430
Cable: BLUESTAR
A,CH,CM,CS,E

Blue Star Ltd.
Band Box House
Prabhadevi
***BOMBAY** 400 025*
Tel: 422-3101
Telex: 011-3751
Cable: BLUESTAR
A,M

Blue Star Ltd.
Sahas
414/2 Vir Savarkar Marg
Prabhadevi
***BOMBAY** 400 025*
Tel: 422-6155
Telex: 011-4093
Cable: FROSTBLUE
A,CH,CM,CS,E,M

Blue Star Ltd.
Kalyan, 19 Vishwas Colony
*Alkapuri, **BORODA**, 390 005*
Tel: 65235
Cable: BLUE STAR
A

Blue Star Ltd.
7 Hare Street
***CALCUTTA** 700 001*
Tel: 12-01-31
Telex: 021-7655
Cable: BLUESTAR
A,M

Blue Star Ltd.
133 Kodambakkam High Road
***MADRAS** 600 034*
Tel: 82057
Telex: 041-379
Cable: BLUESTAR
A,M

Blue Star Ltd.
Bhandari House, 7th/8th Floors
91 Nehru Place
***NEW DELHI** 110 024*
Tel: 682547
Telex: 031-2463
Cable: BLUESTAR
A,CH,CM,CS,E,M

Blue Star Ltd.
15/16:C Wellesley Rd.
***PUNE** 411 011*
Tel: 22775
Cable: BLUE STAR
A

Blue Star Ltd.
1-1-117/1 Sarojini Devi Road
***SECUNDERABAD** 500 033*
Tel: 70126
Telex: 0155-459
Cable: BLUEFROST
A,E

Blue Star Ltd.
T.C. 7/603 Poornima
Maruthankuzhi
***TRIVANDRUM** 695 013*
Tel: 65799
Telex: 0884-259
Cable: BLUESTAR
E

INDONESIA
BERCA Indonesia P.T.
P.O.Box 496/JKT.
Jl. Abdul Muis 62
JAKARTA
Tel: 373009
Telex: 46748 BERSAL IA
Cable: BERSAL JAKARTA
P

BERCA Indonesia P.T.
Wisma Antara Bldg., 17th floor
JAKARTA
A,CS,E,M

BERCA Indonesia P.T.
P.O. Box 174/SBY.
Jl. Kutei No. 11
SURABAYA
Tel: 68172
Telex: 31146 BERSAL SB
Cable: BERSAL-SURABAYA
A,E,M,P*

IRAQ
Hewlett-Packard Trading S.A.
Mansoor City 9B/3/7
BAGHDAD
Tel: 551-49-73
Telex: 2455 HEPAIRAQ IK
CH,CS

IRELAND
Hewlett-Packard Ireland Ltd.
Kestrel House
Clanwilliam Court
Lower Mount Street
DUBLIN 2, Eire
Tel: 680424, 680426
Telex: 30439
A,CH,CM,CS,E,M,P

Cardiac Services Ltd.
Kilmore Road
Artane
***DUBLIN** 5, Eire*
Tel: (01) 351820
Telex: 30439
M

ISRAEL
Electronics Engineering Division
Motorola Israel Ltd.
16 Kremenetski Street
P.O. Box 25016
TEL-AVIV 67899
Tel: 3-338973
Telex: 33569 Motil IL
Cable: BASTEL Tel-Aviv
A,CH,CM,CS,E,M,P

ITALY
Hewlett-Packard Italiana S.p.A.
Traversa 99C
Giulio Petrone, 19
I-70124 **BARI**
Tel: (080) 41-07-44
M

Hewlett-Packard Italiana S.p.A.
Via Martin Luther King, 38/111
I-40132 **BOLOGNA**
Tel: (051) 402394
Telex: 511630
CH,CM,E,MS

Hewlett-Packard Italiana S.p.A.
Via Principe Nicola 43G/C
I-95126 **CATANIA**
Tel: (095) 37-10-87
Telex: 970291 C,P

Hewlett-Packard Italiana S.p.A.
Via G. Di Vittorio 9
I-20063 **CERNUSCO SUL NAVLIGLIO**
Tel: (2) 903691
Telex: 334632
A,CH,CM,CS,E,MP,P

Hewlett-Packard Italiana S.p.A.
Via Nuova san Rocco A
Capodimonte, 62/A
I-80131 **NAPOLI**
Tel: (081) 7413544
A,CH,CM,E

Hewlett-Packard Italiana S.p.A.
Viale G. Modugno 33
I-16156 **GENOVA PEGLI**
Tel: (010) 68-37-07 E,C

Hewlett-Packard Italiana S.p.A.
Via Turazza 14
I-35100 **PADOVA**
Tel: (49) 664888
Telex: 430315
A,CH,CM,E,MS

Hewlett-Packard Italiana S.p.A.
Viale C. Pavese 340
I-00144 **ROMA**
Tel: (06) 54831
Telex: 610514
A,CH,CM,CS,E,MS,P*

Hewlett-Packard Italiana S.p.A.
Corso Giovanni Lanza 94
I-10133 **TORINO**
Tel: (011) 682245, 659308
Telex: 221079
CH,CM,E

JAPAN
Yokogawa-Hewlett-Packard Ltd.
Inoue Building
1-1348-3, Asahi-cho
ATSUGI, Kanagawa 243
Tel: (0462) 24-0451
CM,C*,E

Yokogawa-Hewlett-Packard Ltd.
Sannomiya-Daiichi Seimei-Bldg. 5F
69 Kyo-machi Chuo-ku
KOBE 650
Tel: (078) 392-4791
C,E

Yokogawa-Hewlett-Packard Ltd.
Kumagaya Asahi Yasoji Bldg 4F
3-4 Chome Tsukuba
KUMAGAYA, Saitama 360
Tel: (0485) 24-6563
CH,CM,E

Yokogawa-Hewlett-Packard Ltd.
Mito Mitsui Building
1-4-73, San-no-maru
MITO, Ibaragi 310
Tel: (0292) 25-7470
CH,CM,E

Yokogawa-Hewlett-Packard Ltd.
Sumitomo Seimei Nagoya Bldg.
11-2 Shimo-sasajima-cho
Nakamura-ku
NAGOYA, Aichi 450
Tel: (052) 571-5171
CH,CM,CS,E,MS

Yokogawa-Hewlett-Packard Ltd.
Chuo Bldg., 4th Floor
5-4-20 Nishinakajima, 5-chome
Yodogawa-ku
OSAKA, 532
Tel: (06) 304-6021
Telex: YHPOSA 523-3624
A,CH,CM,CS,E,MP,P*

Yokogawa-Hewlett-Packard Ltd.
3-29-21 Takaido-Higashi 3-chome
Suginami-ku
TOKYO 168
Tel: (03) 331-6111
Telex: 232-2024 YHPTOK
A,CH,CM,CS,E,MP,P*

Yokogawa-Hewlett-Packard Ltd.
3-30-4 Tsuruya-cho
Kanagawa-ku,
YOKOHAMA Kanagawa, 221
Tel: (045) 312-1252
CH,CM,E

JORDAN
Mouasher Cousins Company
P.O. Box 1387
AMMAN
Tel: 24907, 39907
Telex: 21456 SABCO JO
CH,E,M,P

KENYA
ADCOM Ltd., Inc.
City House, Wabera Street
P.O.Box 30635
NAIROBI
Tel: 331955
Telex: 22639
E,M

KOREA
Samsung Electronics
Industrial Products Div.
76-561 Yeoksam-Dong
Kangnam-Ku
C.P.O. Box 2775
SEOUL
Tel: 555-7555, 555-5447
Telex: K27364 SAMSAN
A,CH,CM,CS,E,M,P

KUWAIT
Al-Khalidya Trading & Contracting
P.O. Box 830 Safat
KUWAIT
Tel: 42-4910, 41-1726
Telex: 2481 Areeg kt
CH,E,M

Photo & Cine Equipment
P.O. Box 270 Safat
KUWAIT
Tel: 42-2846, 42-3801
Telex: 2247 Matin
P

LEBANON
G.M. Dolmadjian
Achrafieh
P.O. Box 165.167
BEIRUT
Tel: 290293
MP

LUXEMBOURG
Hewlett-Packard Belgium S.A./N.V.
Blvd de la Woluwe, 100
Woluwedal
B-1200 ***BRUSSELS***
Tel: (02) 762-32-00
Telex: 23-494 paloben bru
A,CH,CM,CS,E,MP,P

MALAYSIA
Hewlett-Packard Sales (Malaysia)
Sdn. Bhd.
Suite 2.21/2.22
Bangunan Angkasa Raya
Jalan Ampang
KUALA LUMPUR
Tel: 483544
Telex: MA31011
A,CH,E,M,P*

Protel Engineering
Lot 319, Satok Road
P.O.Box 1917
*Kuching, **SARAWAK***
Tel: 53544
Telex: MA 70904 PROMAL
Cable: PROTELENG
A,E,M

MALTA
Philip Toledo Ltd.
Natabile Rd.
MRIEHEL
Tel: 447 47, 455 66
Telex: MW.649
P

MEXICO
Hewlett-Packard Mexicana, S.A. de C.V.
Avenida Periferico Sur No. 6501
Tepepan, Xochimilco
MEXICO CITY 23, D.F.
Tel: (905) 676-4600
Telex: 017-74-507
A,CH,CS,E,MS,P

Hewlett-Packard Mexicana, S.A. de C.V.
Rio Volga 600
Colonia del Valle
MONTERREY, N.L.
Tel: 78-42-93, 78-42-40, 78-42-41
Telex: 038-410
CH

MOROCCO
Dolbeau
81 rue Karatchi
CASABLANCA
Tel: 3041-82, 3068-38
Telex: 23051, 22822
E

Gerep
2 rue d'Agadir
Boite Postale 156
CASABLANCA
Tel: 272093, 272095
Telex: 23 739
P

NETHERLANDS
Hewlett-Packard Nederland B.V.
Van Heuven Goedhartlaan 121
NL 1181KK **AMSTELVEEN**
P.O. Box 667
NL1080 AR **AMSTELVEEN**
Tel: (20) 47-20-21
Telex: 13 216
A,CH,CM,CS,E,MP,P

Hewlett-Packard Nederland B.V.
Bongerd 2
NL 2906VK **CAPPELLE**, A/D Ijessel
P.O. Box 41
NL2900 AA **CAPELLE**, Ijssel
Tel: (10) 51-64-44
Telex: 21261 HEPAC NL
A,CH,CM,CS

Koning en Hartman Electrotechnick B.V.
Koperwerf 30
2544 En den Haag
The **NETHERLANDS**
Tel: 070-210101
Telex: 31528
CM

NEW ZEALAND
Hewlett-Packard (N.Z.) Ltd.
169 Manukau Road
P.O. Box 26-189
Epsom, **AUCKLAND**
Tel: 687-159
Cable: HEWPACK Auckland
CH,CM,E,P*

Hewlett-Packard (N.Z.) Ltd.
4-12 Cruickshank Street
Kilbirnie, **WELLINGTON 3**
P.O. Box 9443
Courtenay Place, WELLINGTON
Tel: 877-199
Cable: HEWPACK Wellington
CH,CM,E,P

Northrop Instruments & Systems Ltd.
369 Khyber Pass Road
P.O. Box 8602
AUCKLAND
Tel: 794-091
Telex: 60605
A,M

Northrop Instruments & Systems Ltd.
110 Mandeville St.
P.O. Box 8388
CHRISTCHURCH
Tel: 486-928
Telex: 4203
A,M

Northrop Instruments & Systems Ltd.
Sturdee House
85-87 Ghuznee Street
P.O. Box 2406
WELLINGTON
Tel: 850-091
Telex: NZ 3380
A,M

NORTHERN IRELAND
Cardiac Services Company
95A Finaghy Road South
***BELFAST** BT 10 OBY*
Tel: (0232) 625-566
Telex: 747626
M

NORWAY
Hewlett-Packard Norge A/S
Folke Bernadottesvei 50
P.O. Box 3558
N-5033 **FYLLINGSDALEN** (BERGEN)
Tel: (05) 16-55-40
Telex: 16621 hpnas n
CH,CM,E

Hewlett-Packard Norge A/S
Oesterndalen 18
P.O. Box 34
N-1345 **OESTERAAS**
Tel: (02) 17-11-80
Telex: 16621 hpnas n
A*,CH,CM,E,MS,P

OMAN
Khimjl Ramdas
P.O. Box 19
MUSCAT
Tel: 72-22-17, 72-22-25
Telex: 3289 BROKER MB MUSCAT
P

PAKISTAN
Mushko & Company Ltd.
10, Bazar Road
Sector G-6/4
ISLAMABAD
Tel: 26875
Cable: FEMUS Rawalpindi
A,E,M

Mushko & Company Ltd.
Oosman Chambers
Abdullah Haroon Road
***KARACHI** 0302*
Tel: 511027, 512927
Telex: 2894 MUSKO PK
Cable: COOPERATOR Karachi
*A,E,M,P**

PANAMA
Electrónico Balboa, S.A.
Calle Samuel Lewis
Apartado 4929
Panama 5
Edificio "Alfa" No. 2
CIUDAD DE PANAMA
Tel: 64-2700
Telex: 0383 ELECTRON PG
A,CM,E,M,P

SALES & SUPPORT OFFICES
Arranged alphabetically by country

PANAMA (Con't.)
Foto Internacional, S.A.
Free Zone Colon
Apartado 2068
COLON 3
Tel: 45-2333
Telex: 379 8626, 386 8722
P

PERU
Cía Electro Médica S.A.
Los Flamencos 145, San Isidro
Casilla 1030
LIMA 1
Tel: 41-4325, 41-3703
Telex: Pub. Booth 25306
A,CM,E,M,P

PHILIPPINES
The Online Advanced Systems Corporation
Rico House, Amorsolo Cor. Herrera Street
Legaspi Village, Makati
P.O. Box 1510
Metro ***MANILA***
Tel: 85-35-81, 85-34-91, 85-32-21
Telex: 3274 ONLINE
A,CH,CS,E,M

Electronic Specialists and Proponents Inc.
690-B Epifanio de los Santos Avenue
Cubao, ***QUEZON CITY***
P.O. Box 2649 Manila
Tel: 98-96-81, 98-96-82, 98-96-83
Telex: 40018, 42000 ITT GLOBE MACKAY BOOTH
P

POLAND
Buro Informasji Technicznej
Hewlett-Packard
Ul Stawki 2, 6P
PL00-950 ***WARSZAWA***
Tel: 39-59-62, 39-67-43
Telex: 812453 hepa pl

PORTUGAL
SOQUIMICA
Av. da Libedade 220-2
P-1298 ***LISBOA Codex***
Tel: 56 21 81, 56 21 82
Telex: 13316

Telectra-Empresa Técnica de Equipmentos Eléctricos S.a.r.l.
Rua Rodrigo da Fonseca 103
P.O. Box 2531
P-LISBON 1
Tel: (19) 68-60-72
Telex: 12598
CH,CS,E,P

Mundinter
Intercambio Mundial de Comércio S.a.r.l
P.O. Box 2761
Avenida Antonio Augusto de Aguiar 138
P-LISBON
Tel: (19) 53-21-31, 53-21-37
Telex: 16691 munter p
M

PUERTO RICO
Hewlett-Packard Puerto Rico
P.O. Box 4407
CAROLINA, Puerto Rico 00630
Calle 272 Edificio 203
Urb. Country Club
RIO PIEDRAS, Puerto Rico 00924
Tel: (809) 762-7255
Telex: 345 0514
A,CH,CS

QATAR
Nasser Trading & Contracting
P.O. Box 1563
DOHA
Tel: 22170
Telex: 4439 NASSER
M

Computearabia
P.O. Box 2570
DOHA
Tel: 329515
Telex: 4806 CHPARB
P

ROMANIA
Hewlett-Packard Reprezentanta
Boulevard Nicolae Balcescu 16
BUCURESTI
Tel: 130725
Telex: 10440

SAUDI ARABIA
Modern Electronic Establishment
P.O. Box 193
AL-KHOBAR
Tel: 44-678, 44-813
Telex: 670136
Cable: ELECTA AL-KHOBAR
CH,CS,E,M,P

Modern Electronic Establishment
P.O. Box 1228, Baghdadiah Street
JEDDAH
Tel: 27-798
Telex: 401035
Cable: ELECTA JEDDAH
CH,CS,E,M,P

Modern Electronic Establishment
P.O. Box 2728
RIYADH
Tel: 62-596, 66-232
Telex: 202049
CH,CS,E,M,P

SCOTLAND
Hewlett-Packard Ltd.
Royal Bank Buildings
Swan Street
BRECHIN, Angus, Scotland
Tel: 3101, 3102
CH,CM

Hewlett-Packard Ltd.
SOUTH QUEENSFERRY
West Lothian, EH30 9GT
GB-Scotland
Tel: (031) 3311000
Telex: 72682
A,CH,CM,CS,E,M

SINGAPORE
Hewlett-Packard Singapore (Pty.) Ltd.
P.O. Box 58 Alexandra Post Office
SINGAPORE, 9115
6th Floor, Inchcape House
450-452 Alexandra Road
SINGAPORE 0511
Tel: 631788
Telex: HPSGSO RS 34209
Cable: HEWPACK, Singapore
A,CH,CS,E,MS,P

SOUTH AFRICA
Hewlett-Packard South Africa (Pty.) Ltd.
P.O. Box 120
Howard Place
Pine Park Center, Forest Drive, Pinelands
CAPE PROVINCE 7450
Tel: 53-7955, 53-7956, 53-7957
Telex: 57-0006
A,CH,CM,E,MS,P

Hewlett-Packard South Africa (Pty.) Ltd.
P.O. Box 37099
Overport
DURBAN 4067
Tel: 28-4178, 28-4179, 28-4110
CH,CM

Hewlett-Packard South Africa (Pty.) Ltd.
P.O. Box 33345
Glenstantia 0010 **TRANSVAAL**
1st Floor East
Constantia Park Ridge Shopping Centre
Constantia Park
PRETORIA
Tel: 01298-1126
Telex: 32163
CH,E

Hewlett-Packard South Africa (Pty.) Ltd.
Private Bag Wendywood
SANDTON 2144
Tel: 802-5111, 802-5125
Telex: 89-84782
Cable: HEWPACK Johannesburg
A,CH,CM,CS,E,MS,P

SPAIN
Hewlett-Packard Española S.A.
c/Entenza, 321
E-**BARCELONA** 29
Tel: (3) 322-24-51, 321-73-54
Telex: 52603 hpbee
A,CH,CM,CS,E,MS,P

Hewlett-Packard Española S.A.
c/San Vicente S/N
Edificio Albia II,7 B
E-**BILBAO** 1
Tel: (944) 423-8306, 423-8206
A,CH,CM,E,MS

Hewlett-Packard Española S.A.
Calle Jerez 3
E-**MADRID** 16
Tel: 458-2600
Telex: 23515 hpe
A,CM,E

Hewlett-Packard Española S.A.
c/o Costa Brava 13
Colonia Mirasierra
E-**MADRID** 34
Tel: 734-8061, 734-1162
CH,CS,M

Hewlett-Packard Española S.A.
Av Ramón y Cajal 1-9
Edificio Sevilla 1,
E-**SEVILLA** 5
Tel: 64-44-54, 64-44-58
Telex: 72933
A,CM,CS,MS,P

Hewlett-Packard Española S.A.
C/Ramon Gordillo, 1 (Entlo.3)
E-**VALENCIA** 10
Tel: 361-1354, 361-1358
CH,CM,P

SWEDEN
Hewlett-Packard Sverige AB
Enighetsvägen 3, Fack
P.O. Box 20502
S-16120 **BROMMA**
Tel: (08) 730-0550
Telex: (854) 10721 MESSAGES
Cable: MEASUREMENTS STOCKHOLM
A,CH,CM,CS,E,MS,P

Hewlett-Packard Sverige AB
Sunnanvagen 14K
S-22226 **LUND**
Tel: (46) 13-69-79
Telex: (854) 10721 (via BROMMA office)
CH,CM

Hewlett-Packard Sverige AB
Vastra Vintergatan 9
S-70344 **OREBRO**
Tel: (19) 10-48-80
Telex: (854) 10721 (via BROMMA office)
CH,CM

Hewlett-Packard Sverige AB
Frötallisgatan 30
S-42132 **VÄSTRA-FRÖLUNDA**
Tel: (031) 49-09-50
Telex: (854) 10721 (via BROMMA office)
CH,CM,E,P

SWITZERLAND
Hewlett-Packard (Schweiz) AG
Clarastrasse 12
CH-4058 **BASLE**
Tel: (61) 33-59-20
A,CM

Hewlett-Packard (Schweiz) AG
Bahnhoherweg 44
3018 **BERN**
Tel: (031) 56-24-22
CH,CM

Hewlett-Packard (Schweiz) AG
47 Avenue Blanc
CH-1202 **GENEVA**
Tel: (022) 32-30-05, 32-48-00
CH,CM,CS

Hewlett-Packard (Schweiz) AG
29 Chemin Château Bloc
CH-1219 **LE LIGNON**-Geneva
Tel: (022) 96-03-22
Telex: 27333 hpag ch
Cable: HEWPACKAG Geneva
A,CM,E,MS,P

Hewlett-Packard (Schweiz) AG
Zürcherstrasse 20
Allmend 2
CH-8967 **WIDEN**
Tel: (57) 50-111
Telex: 59933 hpag ch
Cable: HPAG CH
A,CH,CM,CS,E,MS,P

SYRIA
General Electronic Inc.
Nuri Basha-Ahnat Ebn Kays Street
P.O. Box 5781
DAMASCUS
Tel: 33-24-87
Telex: 11215 ITIKAL
Cable: ELECTROBOR DAMASCUS
E

Middle East Electronics
Place Azmé
Boite Postale 2308
DAMASCUS
Tel: 334592
Telex: 11304 SATACO SY
M,P

TAIWAN
Hewlett-Packard Far East Ltd.
Kaohsiung Office
2/F 68-2, Chung Cheng 3rd Road
KAOHSIUNG
Tel: 241-2318, 261-3253
E,MS,P

Hewlett-Packard Far East Ltd.
Taichung Office
#33, Cheng Tr Rd.
10th Floor, Room 5
TAICHUNG
Tel: (042) 289274

Hewlett-Packard Far East Ltd.
Taiwan Office
5th Floor
205 Tun Hwa North Road
TAIPEI
Tel:(02) 751-0404
Cable:HEWPACK Taipei
A,CH,CS,E,MS,P

Ing Lih Trading Co.
3rd Floor 18, Po-Al Road
***TAIPEI** (100)*
Tel: (02) 311-1914
Cable: INGLIH TAIPEI
A

THAILAND
Unimesa
30 Patpong Ave., Suriwong
***BANGKOK** 5*
Tel: (234-091) (234-092)
Telex: TH 81160, TH 81038
Cable: UNIMESA Bangkok
A,C,E,M

Bangkok Business Equipment Ltd.
5/5-6 Dejo Road
BANGKOK
Tel: 234-8670, 234-8671
Telex: 87669-BEQUIPT TH
Cable: BUSIQUIPT Bangkok
P

TRINIDAD & TOBAGO
Caribbean Telecoms Ltd.
50/A Jerningham Avenue
P.O. Box 732
PORT-OF-SPAIN
Tel: 624-4213, 624-4214
Telex: 3235, 3272 HUGCO WG
A,CM,E,M,P

TUNISIA
Tunisie Electronique
31 Avenue de la Liberte
TUNIS
Tel: 280-144
E,P

Corema
1 ter. Av. de Carthage
TUNIS
Tel: 253-821
Telex: 12319 CABAM TN
M

TURKEY
Teknim Company Ltd.
Iran Caddesi No. 7
Kavaklidere, ***ANKARA***
Tel: 275800
Telex: 42155
E

E.M.A.
Medina Eldem Sokak No.41/6
Yuksel Caddesi
ANKARA
Tel: 175 622
M,P

UNITED ARAB EMIRATES
Emitac Ltd.
P.O. Box 1641
SHARJAH
Tel: 354121, 354123
Telex: 68136 Emitac SL
CH,CS,E,M,P

UNITED KINGDOM
see: GREAT BRITAIN
NORTHERN IRELAND
SCOTLAND

UNITED STATES

Alabama
Hewlett-Packard Co.
700 Century Park South
Suite 128
BIRMINGHAM, AL 35226
Tel: (205) 822-6802
CH,CM,MP

Hewlett-Packard Co.
P.O. Box 4207
8290 Whitesburg Drive, S.E.
HUNTSVILLE, AL 35802
Tel: (205) 881-4591
CH,CM,CS,E,M*

Alaska
Hewlett-Packard Co.
1577 "C" Street, Suite 252
ANCHORAGE, AK 99510
Tel: (206) 454-3971
CH*,CM

Arizona
Hewlett-Packard Co.
2336 East Magnolia Street
PHOENIX, AZ 85034
Tel: (602) 273-8000
A,CH,CM,CS,E,MS

Hewlett-Packard Co.
2424 East Aragon Road
TUCSON, AZ 85702
Tel: (602) 889-4631
CH,CM,E,MS**

Arkansas
Hewlett-Packard Co.
P.O. Box 5646
Brady Station
LITTLE ROCK, AR 72215
Tel: (501) 376-1844, (501) 664-8773
CM,MS

California
Hewlett-Packard Co.
99 South Hill Dr.
BRISBANE, CA 94005
Tel: (415) 330-2500
CH,CM,CS

Hewlett-Packard Co.
7621 Canoga Avenue
CANOGA PARK, CA 91304
Tel: (213) 702-8300
A,CH,CM,CS,E,P

Hewlett-Packard Co.
1579 W. Shaw Avenue
FRESNO, CA 93771
Tel: (209) 224-0582
CM,MS

Hewlett-Packard Co.
1430 East Orangethorpe
FULLERTON, CA 92631
Tel: (714) 870-1000
CH,CM,CS,E,MP

Hewlett-Packard Co.
5400 W. Rosecrans Boulevard
LAWNDALE, CA 90260
P.O. Box 92105
LOS ANGELES, CA 90009
Tel: (213) 970-7500
CH,CM,CS,MP

Hewlett-Packard Co.
3939 Lankershim Blvd.
NORTH HOLLYWOOD, CA 91604
Tel: (213) 877-1282
Regional Headquarters

Hewlett-Packard Co.
3200 Hillview Avenue
PALO ALTO, CA 94304
Tel: (415) 857-8000
CH,CM,CS,E

Hewlett-Packard Co.
646 W. North Market Boulevard
SACRAMENTO, CA 95834
Tel: (916) 929-7222
A*,CH,CM,CS,E,MS

Hewlett-Packard Co.
9606 Aero Drive
P.O. Box 23333 **SAN DIEGO**, CA 92123
Tel: (714) 279-3200
CH,CM,CS,E,MP

Hewlett-Packard Co.
Suite A
5553 Hollister
SANTA BARBARA, CA 93111
Tel: (805) 964-3390

Hewlett-Packard Co.
3003 Scott Boulevard
SANTA CLARA, CA 95050
Tel: (408) 988-7000
A,CH,CM,CS,E,MP

Colorado
Hewlett-Packard Co.
24 Inverness Place, East
ENGLEWOOD, CO 80112
Tel: (303) 771-3455
A,CH,CM,CS,E,MS

Connecticut
Hewlett-Packard Co.
47 Barnes Industrial Road South
P.O. Box 5007
WALLINGFORD, CT 06492
Tel: (203) 265-7801
A,CH,CM,CS,E,MS

Florida
Hewlett-Packard Co.
P.O. Box 24210
2727 N.W. 62nd Street
FORT LAUDERDALE, FL 33309
Tel: (305) 973-2600
CH,CM,CS,E,MP

Hewlett-Packard Co.
4080 Woodcock Drive, #132
Brownett Building
JACKSONVILLE, FL 32207
Tel: (904) 398-0663
CM,C*,E*,MS**

Hewlett-Packard Co.
P.O. Box 13910
6177 Lake Ellenor Drive
ORLANDO, FL 32809
Tel: (305) 859-2900
A,CH,CM,CS,E,MS

Hewlett-Packard Co.
6425 N. Pensacola Blvd.
Suite 4, Building 1
PENSACOLA, FL 32575
Tel: (904) 476-8422
A,CM,MS

Hewlett-Packard Co.
110 South Hoover, Suite 120
Vanguard Bldg.
TAMPA, FL 33609
Tel: (813) 872-0900
A*,CH,CM,CS,E*,M*

Georgia
Hewlett-Packard Co.
P.O. Box 105005
2000 South Park Place
ATLANTA, GA 30339
Tel: (404) 955-1500
Telex: 810-766-4890
A,CH,CM,CS,E,MP

Hewlett-Packard Co.
Executive Park Suite 306
P.O. Box 816
AUGUSTA, GA 30907
Tel: (404) 736-0592
CM,MS

Hewlett-Packard Co.
P.O. Box 2103
1172 N. Davis Drive
WARNER ROBINS, GA 31098
Tel: (912) 923-8831
CM,E

Hawaii
Hewlett-Packard Co.
Kawaiahao Plaza, Suite 190
567 South King Street
HONOLULU, HI 96813
Tel: (808) 526-1555
A,CH,CM,E,MS

Idaho
Hewlett-Packard Co.
11311 Chinden Boulevard
BOISE, ID 83707
Tel: (208) 376-6000
CH,CM,M*

Illinois
Hewlett-Packard Co.
211 Prospect Road
BLOOMINGTON, IL 61701
Tel: (309) 663-0383
CH,CM,MS**

Hewlett-Packard Co.
1100 31st Street
DOWNERS GROVE, IL 60515
Tel: (312) 960-5760
CH,CM,CS

Hewlett-Packard Co.
5201 Tollview Drive
ROLLING MEADOWS, IL 60008
Tel: (312) 255-9800
A,CH,CM,CS,E,MP

Indiana
Hewlett-Packard Co.
P.O. Box 50807
7301 No. Shadeland Avenue
INDIANAPOLIS, IN 46250
Tel: (317) 842-1000
A,CH,CM,CS,E,MS

Iowa
Hewlett-Packard Co.
5815 S.W. 5th Street
DES MOINES, IA 50315
Tel: (515) 243-5876
CH,CM,MS**

Hewlett-Packard Co.
2415 Heinz Road
IOWA CITY, IA 52240
Tel: (319) 351-1020
CH,CM,E*,MS

Kansas
Hewlett-Packard Co.
1644 S. Rock
WICHITA, KA 67207
Tel: (316) 265-5200
CH,CM

Kentucky
Hewlett-Packard Co.
10170 Linn Station Road
Suite 525
LOUISVILLE, KY 40223
Tel: (502) 426-0100
A,CH,CM,CS,MS

Louisiana
Hewlett-Packard Co.
P.O. Box 1449
3229 Williams Boulevard
KENNER, LA 70062
Tel: (504) 443-6201
A,CH,CM,CS,E,MS

Maryland
Hewlett-Packard Co.
7121 Standard Drive
HANOVER, MD 21076
Tel: (301) 796-7700
A,CH,CM,CS,E,MS

Hewlett-Packard Co.
2 Choke Cherry Road
ROCKVILLE, MD 20850
Tel: (301) 948-6370
Telex: 710-828-9685
A,CH,CM,CS,E,MP

Massachusetts
Hewlett-Packard Co.
32 Hartwell Avenue
LEXINGTON, MA 02173
Tel: (617) 861-8960
A,CH,CM,CS,E,MP

Michigan
Hewlett-Packard Co.
23855 Research Drive
FARMINGTON HILLS, MI 48024
Tel: (313) 476-6400
A,CH,CM,CS,E,MP

Hewlett-Packard Co.
4326 Cascade Road S.E.
GRAND RAPIDS, MI 49506
Tel: (616) 957-1970
CH,CM,CS,MS

Minnesota
Hewlett-Packard Co.
2025 W. Larpenteur Ave.
ST. PAUL, MN 55113
Tel: (612) 644-1100
A,CH,CM,CS,E,MP

Mississippi
Hewlett-Packard Co.
P.O. Box 5028
322 N. Mart Plaza
JACKSON, MS 39216
Tel: (601) 982-9363
CM,MS

Missouri
Hewlett-Packard Co.
11131 Colorado Avenue
KANSAS CITY, MO 64137
Tel: (816) 763-8000
Telex: 910-771-2087
A,CH,CM,CS,E,MS

Hewlett-Packard Co.
1024 Executive Parkway
ST. LOUIS, MO 63141
Tel: (314) 878-0200
A,CH,CM,CS,E,MP

Nebraska
Hewlett-Packard
7101 Mercy Road
Suite 101, IBX Building
OMAHA, NE 68106
Tel: (402) 392-0948
CM,MS

Nevada
Hewlett-Packard Co.
Suite D-130
5030 Paradise Blvd.
LAS VEGAS, NV 89119
Tel: (702) 736-6610
CM,MS**

New Jersey
Hewlett-Packard Co.
Crystal Brook Professional Building
Route 35
EATONTOWN, NJ 07724
Tel: (201) 542-1384
A*,CM,C*,E*,P*

Hewlett-Packard Co.
W120 Century Road
PARAMUS, NJ 07652
Tel: (201) 265-5000
A,CH,CM,CS,E,MP

Hewlett-Packard Co.
60 New England Av. West
PISCATAWAY, NJ 08854
Tel: (201) 981-1199
A,CH,CM,CS,E

New Mexico
Hewlett-Packard Co.
P.O. Box 11634
11300 Lomas Blvd.,N.E.
ALBUQUERQUE, NM 87123
Tel: (505) 292-1330
Telex: 910-989-1185
CH,CM,CS,E,MS

New York
Hewlett-Packard Co.
5 Computer Drive South
ALBANY, NY 12205
Tel: (518) 458-1550
Telex: 710-444-4691
A,CH,CM,E,MS

Hewlett-Packard Co.
9600 Main Street
CLARENCE, NY 14031
Tel: (716) 759-8621
Telex: 710-523-1893
CH

Hewlett-Packard Co.
200 Cross Keys Office
FAIRPORT, NY 14450
Tel: (716) 223-9950
Telex: 510-253-0092
CH,CM,CS,E,MS

Hewlett-Packard Co.
No. 1 Pennsylvania Plaza
55th Floor
34th Street & 8th Avenue
NEW YORK, NY 10119
Tel: (212) 971-0800
CH,CM,CS,E*,M*

Hewlett-Packard Co.
5858 East Molloy Road
SYRACUSE NY 13211
Tel: (315) 455-2486
A,CH,CM,E,MS

Hewlett-Packard Co.
3 Crossways Park West
WOODBURY, NY 11797
Tel: (516) 921-0300
Telex: 510-221-2183
A,CH,CM,CS,E,MS

North Carolina
Hewlett-Packard Co.
P.O. Box 15579
2905 Guess Road (27705)
DURHAM, NC 27704
Tel: (919) 471-8466
C,M

Hewlett-Packard Co.
5605 Roanne Way
GREENSBORO, NC 27409
Tel: (919) 852-1800
A,CH,CM,CS,E,MS

Ohio
Hewlett-Packard Co.
9920 Carver Road
CINCINNATI, OH 45242
Tel: (513) 891-9870
CH,CM,CS,MS

Hewlett-Packard Co.
16500 Sprague Road
CLEVELAND, OH 44130
Tel: (216) 243-7300
Telex: 810-423-9430
A,CH,CM,CS,E,MS

Hewlett-Packard Co.
962 Crupper Ave.
COLUMBUS, OH 43229
Tel: (614) 436-1041
CH,CM,CS,E*

SALES & SUPPORT OFFICES

Arranged alphabetically by country

Ohio (Con't)
Hewlett-Packard Co.
330 Progress Rd.
DAYTON, OH 45449
Tel: (513) 859-8202
A,CH,CM,E*,MS

Oklahoma
Hewlett-Packard Co.
P.O. Box 366
1503 W. Gore Blvd., Suite #2
LAWTON, OK 73502
Tel: (405) 248-4248
C

Hewlett-Packard Co.
P.O. Box 32008
304 N. Meridan Avenue, Suite A
OKLAHOMA CITY, OK 73107
Tel: (405) 946-9499
A*,CH,CM,E*,MS

Hewlett-Packard Co.
Suite 121
9920 E. 42nd Street
TULSA, OK 74145
Tel: (918) 665-3300
A**,CH,CM,CS,M*

Oregon
Hewlett-Packard Co.
1500 Valley River Drive, Suite 330
EUGENE, OR 97401
Tel: (503) 683-8075
C

Hewlett-Packard Co.
9255 S. W. Pioneer Court
WILSONVILLE, OR 97070
Tel: (503) 682-8000
A,CH,CM,CS,E*,MS

Pennsylvania
Hewlett-Packard Co.
1021 8th Avenue
King of Prussia Industrial Park
KING OF PRUSSIA, PA 19406
Tel: (215) 265-7000
Telex: 510-660-2670
A,CH,CM,CS,E,MP

Hewlett-Packard Co.
111 Zeta Drive
PITTSBURGH, PA 15238
Tel: (412) 782-0400
A,CH,CM,CS,E,MP

South Carolina
Hewlett-Packard Co.
P.O. Box 6442
6941-0 N. Trenholm Road
COLUMBIA, SC 29260
Tel: (803) 782-6493
CH,CM,E,MS

Hewlett-Packard Co.
814 Wade Hampton Blvd.
Suite 10
GREENVILLE, SC 29609
Tel: (803) 232-0917
C

Tennessee
Hewlett-Packard Co.
P.O. Box 22490
224 Peters Road
Suite 102
KNOXVILLE, TN 37922
Tel: (615) 691-2371
A*,CH,CM,MS

Hewlett-Packard Co.
3070 Directors Row
MEMPHIS, TN 38131
Tel: (901) 346-8370
A,CH,CM,MS

Hewlett-Packard Co.
Suite 103
478 Craighead Street
NASHVILLE, TN 37204
Tel: (615) 383-9136
CM,MS**

Texas
Hewlett-Packard Co.
Suite 310W
7800 Shoalcreek Blvd.
AUSTIN, TX 78757
Tel: (512) 459-3143
CM,E

Hewlett-Packard Co.
Suite C-110
4171 North Mesa
EL PASO, TX 79902
Tel: (915) 533-3555
CH,CM,E*,MS**

Hewlett-Packard Co.
5020 Mark IV Parkway
FORT WORTH, TX 76106
Tel: (817) 625-6361
CM,C*

Hewlett-Packard Co.
P.O. Box 42816
10535 Harwin Street
HOUSTON, TX 77036
Tel: (713) 776-6400
A,CH,CM,CS,E,MP

Hewlett-Packard Co.
3309 67th Street
Suite 24
LUBBOCK, TX 79413
Tel: (806) 799-4472
M

Hewlett-Packard Co.
P.O. Box 1270
930 E. Campbell Rd.
RICHARDSON, TX 75081
Tel: (214) 231-6101
A,CH,CM,CS,E,MP

Hewlett-Packard Co.
205 Billy Mitchell Road
SAN ANTONIO, TX 78226
Tel: (512) 434-8241
CH,CM,CS,E,MS

Utah
Hewlett-Packard Co.
3530 W. 2100 South Street
SALT LAKE CITY, UT 84119
Tel: (801) 974-1700
A,CH,CM,CS,E,MS

Virginia
Hewlett-Packard Co.
P.O. Box 9669
2914 Hungary Spring Road
RICHMOND, VA 23228
Tel: (804) 285-3431
A,CH,CM,CS,E,MS

Hewlett-Packard Co.
P.O. Box 4786
3110 Peters Creek Road, N.W.
ROANOKE, VA 24015
Tel: (703) 563-2205
CH,CM,E**

Hewlett-Packard Co.
P.O. Box 12778
5700 Thurston Avenue
Suite 111
VIRGINIA BEACH, VA 23455
Tel: (804) 460-2471
CH,CM,MS

Washington
Hewlett-Packard Co.
15815 S.E. 37th Street
BELLEVUE, WA 98006
Tel: (206) 643-4000
A,CH,CM,CS,E,MP

Hewlett-Packard Co.
Suite A
708 North Argonne Road
SPOKANE, WA 99206
Tel: (509) 922-7000
CH,CM,CS

West Virginia
Hewlett-Packard Co.
4604 MacCorkle Ave., S.E.
CHARLESTON, WV 25304
Tel: (304) 925-0492
A,CM,MS

Wisconsin
Hewlett-Packard Co.
150 S. Sunny Slope Road
BROOKFIELD, WI 53005
Tel: (414) 784-8800
A,CH,CM,CS,E*,MP

URUGUAY
Pablo Ferrando S.A.C. e.I.
Avenida Italia 2877
Casilla de Correo 370
MONTEVIDEO
Tel: 80-2586
Telex: Public Booth 901
A,CM,E,M

Guillermo Kraft del Uruguay S.A.
Av. Lib. Brig. Gral. Lavalleja 2083
MONTEVIDEO
Tel: 234588, 234808, 208830
Telex: 6245 ACTOUR UY
P

U.S.S.R.
Hewlett-Packard Co.
Representative Office
Pokrovsky Blvd. 4/17 KV12
MOSCOW 101000 Tel: 294-2024
Telex: 7825 HEWPACK SU

VENEZUELA
Hewlett-Packard de Venezuela C.A.
Apartado 50933
3A Transversal Los Ruices Norte
Edificio Segre
CARACAS 1071
Tel: 239-4133
Telex: 25146 HEWPACK
A,CH,CS,E,MS,P

YUGOSLAVIA
Iskra-Commerce-Representation of Hewlett-Packard
Sava Centar Delegacija 30
Milentija Popovica 9
11170 ***BEOGRAD***
Tel: 638-762
Telex: 12042, 12322 YU SAV CEN

Iskra-Commerce-Representation of Hewlett-Packard
Koprska 46
61000 ***LJUBLJANA***
Tel: 321674, 315879
Telex:

ZAIRE
Computer & Industrial Engineering
25 Avenue de la Justice
B.P. 10-976
Kinshasha I/Zaire
GOMBE
Tel: 32063
Telex: 21-457 SGEKIN ZR
CH,CS

ZIMBABWE
Field Technical Sales
45 Kelvin Road, North
P.B. 3458
SALISBURY
Tel: 705 231
Telex: 4-122 RH
C,E,M,P

FOR COUNTRIES AND AREAS NOT LISTED:

CANADA
Ontario
Hewlett-Packard (Canada) Ltd.
6877 Goreway Drive
MISSISAUGA, Ontario L4V 1M8
Tel: (416) 678-9430
Telex: 610-492-4246

EASTERN USA
Maryland
Hewlett-Packard Co.
4 Choke Cherry Road
Rockville, MD 20850
Tel: (301) 258-2000

MIDWESTERN USA
Illinois
Hewlett-Packard Co.
5201 Tollview Drive
ROLLING MEADOWS, IL 60008
Tel: (312) 255-9800

SOUTHERN USA
Georgia
Hewlett-Packard Co.
P.O. Box 105005
450 Interstate N. Parkway
ATLANTA, GA 30339
Tel: (404) 955-1500

WESTERN USA
California
Hewlett-Packard Co.
3939 Lankersim Blvd.
LOS ANGELES, CA 91604
Tel: (213) 877-1282

EUROPEAN AREAS NOT LISTED, CONTACT
SWITZERLAND
Hewlett-Packard S.A.
7 Rue du Bois-du-Lan
CH-1217 **MEYRIN 2**, Switzerland
Tel: (022) 83-81-11
Telex: 27835 hpse
Cable: HEWPACKSA Geneve

EAST EUROPEAN AREAS NOT LISTED, CONTACT
AUSTRIA
Hewlett-Packard Ges.m.b.h.
Wehlistrasse 29
P.O. Box 7
A-1205 **VIENNA**
Tel: (222) 35-16-210
Telex: 135823/135066

MEDITERRANEAN AND MIDDLE EAST AREAS NOT LISTED, CONTACT
GREECE
Hewlett-Packard S.A.
Mediterranean & Middle East Operations
32 Kifisias Ave.
Atrina Center
PARADISOS, Amaroussion
Tel: 808-1741-4
Telex: 21-6588 HPAT GR
Cable: HEWPACKSA Athens

INTERNATIONAL AREAS NOT LISTED, CONTACT
OTHER AREAS
Hewlett-Packard Co.
Intercontinental Headquarters
3495 Deer Creek Road
PALO ALTO, CA 94304
Tel: (415) 857-1501
Telex: 034-8300
Cable: HEWPACK

FOR COUNTRIES AND AREAS NOT LISTED, CONTACT:

AFRICA
NORTHERN AND CENTRAL AFRICA
SWITZERLAND
Hewlett-Packard S.A.
7 Rue du Bois-du-Lan
CH-1217 **MEYRIN 2**, Switzerland
Tel: (022) 98-96-51
Telex: 27835 hpse
Cable: HEWPACKSA Geneve

ASIA
HONG KONG
Hewlett-Packard Asia Ltd.
6th Floor, Sun Hung Kai Center
30 Harbor Rd.
G.P.O. Box 795
HONG KONG
Tel: 5-832 3211
Telex: 66678 HEWPA HX
Cable: HP ASIA LTD Hong Kong

EUROPE
EASTERN EUROPE
AUSTRIA
Hewlett-Packard Ges.m.b.h.
Wehlistrasse 29
P.O.Box 7
A-1205 **VIENNA**
Tel: (222) 35-16-210
Telex: 135823/135066

NORTHERN EUROPE
THE NETHERLANDS
Hewlett-Packard S.A.
Uilenstede 475
NL-1183 AG **AMSTELVEEN**, The Netherlands
P.O.Box 999
NL-1180 AZ **AMSTELVEEN**, The Netherlands
Tel: 20 437771

SOUTH EASTERN EUROPE
SWITZERLAND
Hewlett-Packard S.A.
7 Rue du Bois-du-Lan
CH-1217 **MEYRIN 2**, Switzerland
Tel: (022) 98-96-51
Telex: 27835 hpse
Cable: HEWPACKSA Geneve
(Offices in the World Trade Center)

MEDITERRANEAN AND MIDDLE EAST
GREECE
Hewlett-Packard S.A.
Mediterranean and Middle East Operations
Atrina Centre
32 Kifissias Ave.
Amaroussion, **ATHENS**, Greece
Tel: 808-0359 808-0429
Telex: 21-6588
Cable: HEWPACKSA Athens

OTHER INTERNATIONAL AREAS
Hewlett-Packard Co.
Intercontinental Headquarters
3495 Deer Creek Road
PALO ALTO, CA 94304
Tel: (415) 857-1501
Telex: 034-8300
Cable: HEWPACK

August 1981 5952-6900

9/20/81

K4XL's BAMA

This manual is provided FREE OF CHARGE from the “BoatAnchor Manual Archive” as a service to the Boatanchor community.

It was uploaded by someone who wanted to help you repair and maintain your equipment.

If you paid anyone other than BAMA for this manual, you paid someone who is making a profit from the free labor of others without asking their permission.

You may pass on copies of this manual to anyone who needs it. But do it without charge.

Thousands of files are available without charge from BAMA. Visit us at http://bama.sbc.edu