Startup Guide

Keysight M9018A PXIe Chassis

KEYSIGHT TECHNOLOGIES

Notices

© Keysight Technologies, Inc. 2012, 2014

No part of this manual may be reproduced in any form or by any means (including electronic storage and retrieval or translation into a foreign language) without prior agreement and written consent from Keysight Technologies, Inc. as governed by United States and international copyright laws.

Manual Part Number

M9018-90001

Edition

Seventh Edition, September 2014
Printed in Malaysia

Published in U.S.A.
900 S. Taft Avenue,
Loveland, CO. 80537

Trademarks

LabVIEW® is a registered trademark of National Instruments.

PXI® is a registered trademark of the PXI Systems Alliance.

PICMG®, Compact PCI®, and AdvancedTCA® are registered trademarks of the PCI Industrial Computer Manufacturers Group.

PCI-SIG®, PCI Express®, and PCIe® are registered trademarks of PCI-SIG.

Sales and Technical Support

To contact Keysight for sales and technical support, refer to the support links on the following Keysight websites:

www.keysight.com/find/9018A (product-specific information and support, software and documentation updates)

www.keysight.com/find/assist (worldwide contact information for repair and service)

Information on preventing damage to your Keysight equipment can be found at www.keysight.com/find/tips.

Declaration of Conformity

Declarations of Conformity for this product and for other Keysight products may be downloaded from the Web. Go to http://keysight.com/go/conformity and click on "Declarations of Conformity." You can then search by product number to find the latest Declaration of Conformity.

Technology Licenses

The hardware and/or software described in this document are furnished under a license and may be used or copied only in accordance with the terms of such license.

Warranty

THE MATERIAL CONTAINED IN THIS DOCUMENT IS PROVIDED "AS IS," AND IS SUBJECT TO BEING CHANGED, WITHOUT NOTICE, IN FUTURE EDITIONS. FURTHER, TO THE MAXIMUM EXTENT PERMITTED BY APPLICABLE LAW, KEYSIGHT DISCLAIMS ALL WARRANTIES, EITHER EXPRESS OR IMPLIED, WITH REGARD TO THIS MANUAL AND ANY INFORMATION CONTAINED HEREIN, INCLUDING BUT NOT LIMITED TO THE IMPLIED WARRANTIES OF MERCHANTABILITY AND FITNESS FOR A PARTICULAR PURPOSE. KEYSIGHT SHALL NOT BE LIABLE FOR ERRORS OR FOR INCIDENTAL OR CONSEQUENTIAL DAMAGES IN CONNECTION WITH THE FURNISHING, USE, OR PERFORMANCE OF THIS DOCUMENT OR OF ANY INFORMATION CONTAINED HEREIN. SHOULD KEYSIGHT AND THE USER HAVE A SEPARATE WRITTEN AGREEMENT WITH WARRANTY TERMS COVERING THE MATERIAL IN THIS DOCUMENT THAT CONFLICT WITH THESE TERMS, THE WARRANTY TERMS IN THE SEPARATE AGREEMENT SHALL CONTROL.

Keysight Technologies does not warrant third-party system-level (combination of chassis, controllers, modules, etc.) performance, safety, or regulatory compliance unless specifically stated.

DFARS/Restricted Rights Notices

If software is for use in the performance of a U.S. Government prime contract or subcontract, Software is delivered and licensed as "Commercial computer software" as defined in DFAR 252.227-7014 (June 1995), or as a "commercial item" as defined in FAR 2.101(a) or as "Restricted computer software" as defined in FAR 52.227-19 (June 1987) or any equivalent agency regulation or contract clause. Use, duplication or disclosure of Software is subject to Keysight Technologies' standard commercial license terms, and non-DOD Departments and Agencies of the U.S. Government will receive no greater than Restricted Rights as defined in FAR 52.227-19(c)(1-2) (June 1987). U.S. Government users will receive no greater than Limited Rights as defined in FAR 52.227-14 (June 1987) or DFAR 252.227-7015 (b)(2) (November 1995), as applicable in any technical data.

Safety Information

The following general safety precautions must be observed during all phases of operation of this instrument. Failure to comply with these precautions or with specific warnings or operating instructions in the product manuals violates safety standards of design, manufacture, and intended use of the instrument. Keysight Technologies assumes no liability for the customer's failure to comply with these requirements.

General

Do not use this product in any manner not specified by the manufacturer. The protective features of this product must not be impaired if it is used in a manner specified in the operation instructions.

Before Applying Power

Verify that all safety precautions are taken. Make all connections to the unit before applying power. Note the external markings described under "Safety Symbols".

Ground the Instrument

Keysight chassis' are provided with a grounding-type power plug. The instrument chassis and cover must be connected to an electrical ground to minimize shock hazard. The ground pin must be firmly connected to an electrical ground (safety ground) terminal at the power outlet. Any interruption of the protective (grounding) conductor or disconnection of the protective earth terminal will cause a potential shock hazard that could result in personal injury.

Do Not Operate in an Explosive Atmosphere

Do not operate the module/chassis in the presence of flammable gases or fumes.

Do Not Operate Near Flammable Liquids

Do not operate the module/chassis in the presence of flammable liquids or near containers of such liquids.

Cleaning

Clean the outside of the Keysight module/chassis with a soft, lint-free, slightly dampened cloth. Do not use detergent or chemical solvents.

Do Not Remove Instrument Cover

Only qualified, service-trained personnel who are aware of the hazards involved should remove instrument covers. Always disconnect the power cable and any external circuits before removing the instrument cover.

Keep away from live circuits

Operating personnel must not remove equipment covers or shields. Procedures involving the removal of covers and shields are for use by service-trained personnel only. Under certain conditions, dangerous voltages may exist even with the equipment switched off. To avoid dangerous electrical shock, DO NOT perform procedures involving cover or shield removal unless you are qualified to do so.

DO NOT operate damaged equipment

Whenever it is possible that the safety protection features built into this product have been impaired, either through physical damage, excessive moisture, or any other reason, REMOVE POWER and do not use the product until safe operation can be verified by service-trained personnel. If necessary, return the product to an Keysight Technologies Sales and Service Office for service and repair to ensure the safety features are maintained.

DO NOT block the primary disconnect

The primary disconnect device is the appliance connector/power cord when a chassis used by itself, but when installed into a rack or system the disconnect may be impaired and must be considered part of the installation.

Do Not Modify the Instrument

Do not install substitute parts or perform any unauthorized modification to the product. Return the product to an Keysight Sales and Service Office to ensure that safety features are maintained.

In Case of Damage

Instruments that appear damaged or defective should be made inoperative and secured against unintended operation until they can be repaired by qualified service personnel.

CAUTION

Do NOT block vents and fan exhaust: To ensure adequate cooling and ventilation, leave a gap of at least 50mm (2") around vent holes on both sides of the chassis.

Do NOT operate with empty slots: To ensure proper cooling and avoid damaging equipment, fill each empty slot with an AXIe filler panel module.

Do NOT stack free-standing chassis: Stacked chassis should be rack-mounted.

All modules are grounded through the chassis: During installation, tighten each module's retaining screws to secure the module to the chassis and to make the ground connection.

WARNING

Operator is responsible to maintain safe operating conditions. To ensure safe operating conditions, modules should not be operated beyond the full temperature range specified in the Environmental and physical specification. Exceeding safe operating conditions can result in shorter lifespan, improper module performance and user safety issues. When the modules are in use and operation within the specified full temperature range is not maintained, module surface temperatures may exceed safe handling conditions which can cause discomfort or burns if touched. In the event of a module exceeding the full temperature range, always allow the module to cool before touching or removing modules from the chassis.

Safety Symbols

CAUTION

A CAUTION denotes a hazard. It calls attention to an operating procedure or practice that, if not correctly performed or adhered to, could result in damage to the product or loss of important data. Do not proceed beyond a CAUTION notice until the indicated conditions are fully understood and met.

WARNING

A WARNING denotes a hazard. It calls attention to an operating procedure or practice, that, if not correctly performed or adhered to, could result in personal injury or death. Do not proceed beyond a WARNING notice until the indicated conditions are fully understood and met.

Products display the following symbols:

Uhihu#wr#p dqxdo#iru#
dgglwlrqdo#vdihw|#
lqirup dwlrq1

Hduwk#Jurxqg1

Fkdvvlv#Jurxqg1

Dowhuqdwlqj#Fxuhqw#DF,1

Glhfw#Fxuhqw#GF,1

Vwdqge|#Srz hu#Xqlw#lv#qrw#
frp sdwho|#glvfrqqhfwhg#
iurp #DF#p dlqv#z khq#
srz hu#vz lwfk#lv#lq#wdqge|#
srvlwlrq

Lqglfdwhv#wkdw#dqwlvwdwlf#
suhfdxwlrqv#vkrxog#eh#
wdnhq1

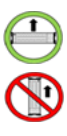

Rshudwh#wkh#S[1h#fkdvvlv#
lq#wkh#krul}rqwdo#
rulhqwdwlrq1#Gr#QRW#
rshudwh#wklv#fkdvvlv#lq#wkh#
yhuwlfdo#rulhqwdwlrq1

The CSA mark is a registered trademark of the Canadian Standards Association and indicates compliance to the standards laid out by them. Refer to the product Declaration of Conformity for details.

Notice for European Community: This product complies with the relevant European legal Directives: EMC Directive (2004/108/EC) and Low Voltage Directive (2006/95/EC).

The Regulatory Compliance Mark (RCM) mark is a registered trademark. This signifies compliance with the Australia EMC Framework regulations under the terms of the Radio Communication Act of 1992.

ICES/NMB-001

ICES/NMB-001 indicates that this ISM device complies with the Canadian ICES-001.

This symbol represents the time period during which no hazardous or toxic substance elements are expected to leak or deteriorate during normal use. Forty years is the expected useful life of this product.

KCC-REM-ATi-BLMODSF01

South Korean Class A EMC Declaration. this equipment is Class A suitable for professional use and is for use in electromagnetic environments outside of the home.

A 급 기기 (업무용 방송통신기자재)
이 기기는 업무용 (A 급) 전자파적합기
기로서 판 매자 또는 사용자는 이 점을 주
의하시기 바라 며 , 가정외의 지역에서
사용하는 것을 목적으 로 합니다.

Waste Electrical and Electronic Equipment (WEEE) Directive 2002/96/EC

This product complies with the WEEE Directive (2002/96/EC) marking requirement. The affixed product label (see below) indicates that you must not discard this electrical/electronic product in domestic household waste.

Product Category: With reference to the equipment types in the WEEE directive Annex 1, this product is classified as a “Monitoring and Control instrumentation” product.

Do not dispose in domestic household waste.

To return unwanted products, contact your local Keysight office, or see www.keysight.com/environment/product for more information.

Contents

1 Introduction

Organization of the Startup Guide . . . 3
Chassis system documentation . . . 4
M9018A system overview . . . 5
M9018A interactive block diagram . . . 6
Static-safe handling procedures . . . 11

2 STEP 1: Verify the Shipment Contents

M9018A chassis shipment verification . . . 12

3 STEP 2: Prepare the Hardware and Install the Software

Host controller hardware and software requirements . . . 14
Setting up the chassis on a bench . . . 15
Removing and installing filler panels . . . 15
Setting the M9021A power slide switch . . . 16
Connecting a remote controller PC to the chassis . . . 17
Installing an embedded controller PC in the chassis . . . 19
M9018A PCIe Link Configuration . . . 21
Installing software on the host controller . . . 22
Compatibility of the M9018A Chassis Drivers with Keysight IO Libraries Suite 22
Installing the Keysight IO Libraries Suite . . . 23
Installing the M9018A chassis drivers . . . 23

4 STEP 3: Turn On and Verify Operation of the Chassis System

Power sequencing of the chassis . . . 25
Power sequence requirements . . . 25
Methods of powering up the chassis . . . 26
Chassis front panel LEDs . . . 26
PC startup requirements for Keysight IO Libraries Suite . . . 28
PC startup events for Connection Expert 16.0 . . . 28
PC startup events for Connection Expert 16.1 or later . . . 29
Using Connection Expert to connect to the chassis . . . 30
Using the soft front panel to monitor the chassis . . . 31
Starting the SFP and selecting Hardware Mode or Simulation Mode . . . 31
Using the SFP to monitor the chassis . . . 33

5 STEP 4: Overview of Installing and Verifying Keysight Modules

Installing modules 37
Installing the module software 37
Verifying your module 37

6 Appendix A: Chassis and Accessory Model Numbers

7 Appendix B: Chassis Specifications

Introduction

The 18-slot Keysight M9018A PXIe Chassis has these key features:

- Contains an advanced PCIe switch fabric that operates at PCI Express Generation 2 (“Gen 2”) speeds.
- Provides a mix of x4 and x8 links to the module slots. At Gen 2 speeds, the x8 links can deliver data to modules at 4 GB/s when connected to an x8-capable computer. Module-to-module communications are also supported at 4 GB/s for modules installed in x8 capable slots.
- Supports multiple chassis. There are several possible ways to configure multiple M9018A PXIe and M9502A 2-Slot and M9505A 5-Slot AXIe chassis together; all of them controlled by a single host controller. The host controller can be either a PXIe Embedded Controller (such as the Keysight M9036A) or a desktop or rack-mounted computer. For detailed multiple PXIe and AXIe chassis arrangement information, refer to *Keysight's Multiple PXIe and AXIe Chassis Configuration* tool. This tool is available on the M9018A Product information CD as well as on line at: www.keysight.com/find/pxie-multichassis.
- A system timing module can be installed in the chassis to provide advanced trigger signals to all slots.

Figure 1 shows a front view of the M9018A chassis with filler panels removed.

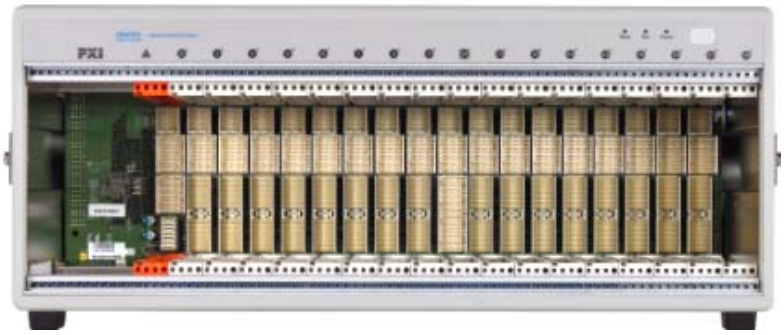

Figure 1 Front view of the M9018A chassis showing the 18 slots

Before continuing, some important terminology is presented. The computer that controls the chassis is known as the *host controller* or *system controller*, and is shown at the top of the hierarchy in Figure 2:

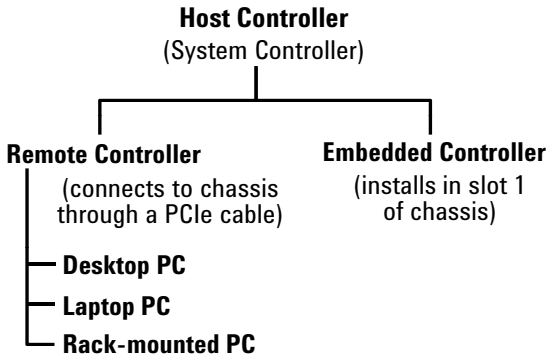

Figure 2 The host controller, remote controller, and embedded controller hierarchy

The host controller can either be a *remote controller* or an *embedded controller*. A remote controller is a Windows-based PC, and can be a desktop PC, a laptop PC, or a rack mounted PC. The remote controller interfaces to the chassis through a PCIe cable.

An embedded controller, such as the Keysight M9036A Embedded Controller, is a small form factor, Windows-based PC that is designed for installation in the system controller slot (slot 1) of the chassis. An embedded controller also consumes two or three expansion slots to the left of slot 1.

The combination of the chassis, the host controller (and a PCIe cable if the host controller is a remote controller), and the chassis I/O software running on the host controller is referred to as a *chassis system*.

NOTE

In order for a PC to serve as a remote controller, its BIOS must support enumeration of the PCIe slots in the chassis; many computers are not capable of enumerating a sufficient number of PCIe slots to ensure that slots in an external chassis are enumerated.

Keysight provides the document “PCI and AXIe Modular Instrumentation Tested Computer List Technical Note” which lists the embedded, desktop, laptop, and rack-mounted PCs that have been verified to enumerate the PCIe slots in the M9018A chassis. Please use this document, available under the **Document Library** tab at www.keysight.com/find/M9018A, to guide your selection of remote controller PCs..

Organization of the Startup Guide

This guide is organized as follows:

Introduction (this chapter)—The goal of the Introduction is to familiarize you with the features and capabilities of the M9018A chassis. Central to this presentation is an interactive block diagram which is available in the electronic version of this guide on the Software and Product Information CD. Keysight recommends that you check www.keysight.com/find/M9018A to see if a later version of this guide is available.

"STEP 1: Verify the Shipment Contents"—This section describes how a chassis system is shipped and what is included with the chassis itself.

"STEP 2: Prepare the Hardware and Install the Software"—This section describes the computer hardware and software requirements, installation of an embedded controller, connection of a remote controller, and software installation on the controller.

"STEP 3: Turn On and Verify Operation of the Chassis System"—This section describes how to use Connection Expert and the chassis soft front panel (SFP) to verify operation of the chassis.

"STEP 4: Overview of Installing and Verifying Keysight Modules"—This section provides an overview of installing and verifying Keysight modules in the chassis, and is intended to supplement your module documentation.

"Appendix A: Chassis and Accessory Model Numbers"—This appendix lists the model numbers of the chassis and its accessories.

"Appendix B: Chassis Specifications"—This appendix provides several of the chassis technical specifications.

Chassis system documentation

The following Keysight documents can be found on the Software and Product Information CD (M9018-10001) that came with your chassis:

- *Keysight M9018A PXIe Chassis Startup Guide* (this document)
- *Keysight M9018A PXIe Chassis User Guide*
- *Keysight M9018A PXIe Chassis Interactive Block Diagram*
- *Keysight Multiple PXIe and AXIe Chassis Configuration* tool.

For the latest versions of the above documents, visit the Keysight website at www.keysight.com/find/M9018A. The following documents are also available on this website:

- Keysight M9018A PXIe Chassis Data Sheet ("M9018A Data Sheet")
- Keysight M9021A PCIe Cable Interface Data Sheet ("M9021A Data Sheet")
- Keysight PXI and AXIe Modular Instrumentation Tested Computer List Technical Note ("Tested Computer List") — This document lists the PCs that have been verified to work with the M9018A chassis.
- To assist you in locating the documentation that will best meet your needs, Table 1 lists the recommended chassis documents by audience. Also listed are the key topics covered in each group of documents.

Table 1 M9018A chassis documents by audience

Audience	Recommended Documents	Key Topics
First-time users of the M9018A chassis	- M9018A Startup Guide (this document) - M9018A Block Diagram - M9018A Data Sheet - M9021A Data Sheet - Tested Computer List - Documentation for each module	- M9018A chassis architecture and capabilities - Selection of the host controller PC - Connecting the chassis to a computer and powering up the system - Using Connection Expert and the soft front panel (SFP) to verify chassis operation - Installing Keysight modules in the chassis
Experienced users and system integrators	The above documents plus the: - M9018A User Guide - For detailed multiple PXIe and AXIe chassis information, refer to Keysight's Multiple PXIe and AXIe Chassis Configuration tool. This tool is available on the M9018A Product information - CD as well as on line at: www.keysight.com/find/pxie-multichassis.	- Rack mounting the chassis - Using the SFP to configure the chassis - Software programming overview - Troubleshooting issues with the chassis - Multiple Chassis Configurations
Software developers	- The above documents plus the: - IVI-C/COM help file - LabVIEW help file	- Programming to the IVI-C and IVI-COM interfaces - Programming to the LabVIEW interface

M9018A system overview

An M9018A system consists of the chassis, a computer operating as the host controller, and software on the controller to manage the chassis. Figure 3 shows the primary components of the M9018A system.

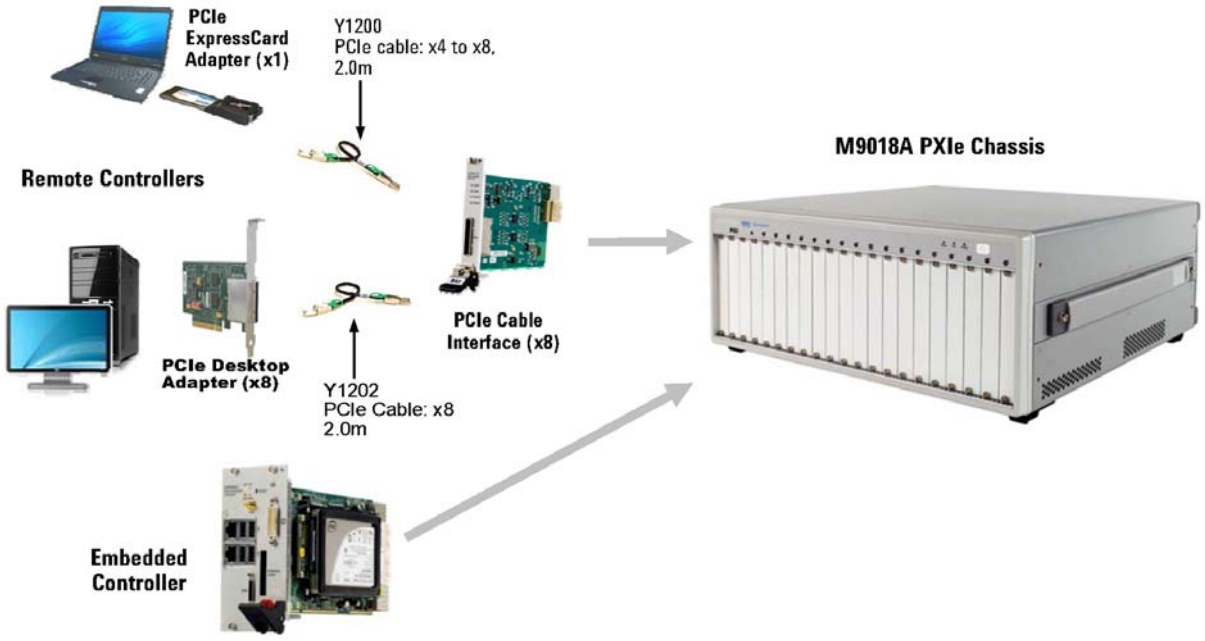

Figure 3 M9018A system components

The host controller can be a desktop PC, a laptop PC, a rack-mounted PC, or an embedded controller. To interface to a remote controller, a cable interface module such as the Keysight M9021A PCIe Cable Interface module is installed in slot 1 of the chassis.

The Keysight M9045A/B PCIe ExpressCard Adapter is installed in a laptop PC in order to interface to the chassis. The Keysight M9048A PCIe Desktop Adapter is installed in a desktop PC or a rack-mounted PC to interface to the chassis.

Keysight provides a rich set of software to manage the chassis, including Keysight IO Libraries Suite and the M9018A soft front panel (SFP). In addition, IVI-C, IVI-COM, and LabVIEW chassis drivers are provided to support development of custom chassis interface software.

NOTE The IVI-C, IVI-COM, and LabVIEW chassis drivers are separate and distinct from the drivers for the individual modules that plug into the chassis peripheral slots. The chassis drivers allow interfacing to chassis-specific functionality such as temperature sensors and fan speeds. An overview of the chassis drivers is provided in the M9018A User Guide, while details are provided in the IVI-C/COM and LabVIEW help files. For information on the functionality provided by the module drivers, refer to the documentation for each of your modules.

M9018A interactive block diagram

This section describes an interactive block diagram of the M9018A chassis. Keysight suggests that you use the interactive features to familiarize yourself with the architecture and capabilities of the M9018A chassis. View the complete interactive block diagram from the Windows Start button:

Start > All Programs > Keysight > M9018 > M9018 Block Diagram

You can also view the block diagram on the Software and Product Information CD or you can download the block diagram from www.keysight.com/find/M9018A.

There are two types of interactive features on the block diagram:

- **Mouse-over rounded rectangles**—Placing your mouse over any rounded rectangle will display an informational popup providing additional details.
- **Check boxes**—Clicking a check box will statically display additional information, such as a particular PXIe switch configuration or a particular set of trigger lines.

These features are described on the next two pages, followed by a static (non-interactive) version of the block diagram.

Table 2 lists the primary mouse-over rounded rectangles and checkboxes in the recommended order of viewing.

Table 2 Recommended order of viewing block diagram features

START HERE **Please place your mouse over this rounded rectangle to view information about this diagram.**	Place your mouse over this rounded rectangle on the diagram to view important information regarding using the diagram.
	Place your mouse over the Remote Controllers rounded rectangle to view information on the PCIe adapters that are used with laptop PCs, desktop PCs, and rack-mounted PCs to interface to the chassis. Information is also provided on the cables that are used between the adapters and the chassis.
	Place your mouse over this rounded rectangle to view information on the M9036A Embedded Controller. An embedded controller is a self-contained, Windows-based PC that is installed in slot 1 of the chassis and also consumes the two or three expansion slot to the left of slot 1.
	This rounded rectangle can be used to view information about the Keysight M9021A PCIe Cable Interface module (x8).

Table 2 Recommended order of viewing block diagram features (continued)

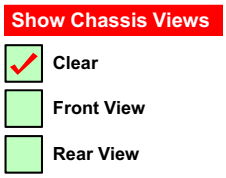	Click Front View to view a labeled drawing of the front of the chassis, and click Rear View to view a labeled drawing of the rear of the chassis. Of particular importance in the front view is the M9021A power slide switch, which must be positioned to the right to power the M9021A PCIe Cable Interface module, and must be positioned to the left for all other slot 1 modules.
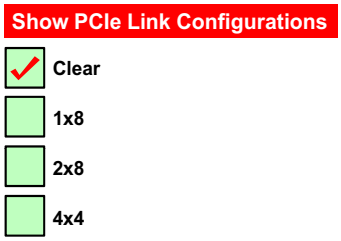	The M9018A chassis currently implements three PCIe link configurations, 2-Link Configuration: 1x8, 2-Link Configuration: 2x8, and 4-Link Configuration: 4x4. These configurations provide different PCIe connections from the system controller slot to the hybrid slots and the system timing slot. Click the check boxes on the diagram to view the PCIe connections associated with each configuration. The 1x8 configuration is the factory default configuration; see the M9018A User Guide for information on selecting the other configurations. Use the 1x8 configuration with laptop computer PCIe adapters such as the M9045A/B.
	Click this check box to view the type of boards supported by the chassis hybrid slots.
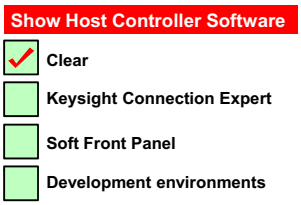	These check boxes can be used to display the two key user interface software components, Connection Expert and the chassis soft front panel, that run on the host controller. The Development environments check box can be checked to view the supported application development environments.

Because the interactive block diagram uses JavaScript, you may be prompted to enable JavaScript—select **Yes** if asked. If you're not prompted to enable JavaScript and need to do so in order to make the diagram interactive, look for the enable JavaScript check box as follows on Adobe Acrobat and Adobe Reader:

Edit > Preferences > JavaScript

If you print the block diagram, use a tabloid-capable printer (11"x17", which is the page size of the diagram). The diagram can also be printed on letter size paper by selecting "Fit to Printable Area" or equivalent.

Features selected using the check boxes will print the same as viewed on your monitor. However, mouse-over popups are not printable.

Keysight M9018A PXIe Chassis

START HERE
Please place your mouse over this rounded rectangle to view information about this diagram.

PCIe 2-Link and 4-Link Configurations

Links used of the two x8 links available

	Link 1	Link 2
1x8	✓	
2x8	✓	✓

Possible PCIe 2-Link Configurations

Total number of x8 links used — Lanes per link

Factory default

Links used of the four x4 links available

	Link 1	Link 2	Link 3	Link 4
1x4	✓			
2x4	✓	✓		
3x4	✓	✓	✓	
4x4	✓	✓	✓	✓

Possible PCIe 4-Link Configurations

Total number of x4 links used — Lanes per link

Show PCIe Link Configurations

- Clear
- 1x8
- 2x8
- 4x4

Show Host Controller Software

- Clear
- Keysight Connection Expert
- Soft Front Panel
- Development environments

Front panel ON/Standby pushbutton

XP4 XP3 XP2 XJ1

Slot 1 System Controller Slot

PCIe ExpressCard Adapter (x1)

Y1200B PCIe cable: x1 to x8 connectors, 2.0m

M9021A PCIe Cable Interface (x8)

Remote Controllers

M9048A PCIe Desktop Adapter (x8)

Y1202A PCIe cable: x8, 2.0m

Embedded Controller

ON/Standby pushbutton power activation signal

PCIe Switch Fabric Configurator
This program can be used to set the User Configuration to 2x8 or 4x4 (and point the virtual switch to the User Configuration), or point the switch to the Base Configuration.

User Configuration | Base Configuration: 1x8 (Factory default, read-only)

User virtual switch | Base | Load Base Configuration Pushbutton

When the host controller PC boots, it asserts its PCIe Reset signal which causes the User or Base Configuration to be loaded into the PCIe Switch Fabric, depending on the virtual switch position.

PCIe Switch Fabric

x8 x4 x4 x4 x8 x1 x1 x4 x4 x4 x4 x8 x4 x1 x4 x4 x8 x4 x4 x4

Eight backplane temperature sensors

XP4 XP3 XP1

Slot 2 Slot 3 Slot 4 Slot 5 Slot 6 — Hybrid Slots

Slot 7 Slot 8 Slot 9 — Hybrid Slots

PXI_CLK10_IN

XP4 XP3 TP2 TP1

Slot 10 System Timing Slot

Slot 11 Slot 12 — Hybrid Slots

Slot 13 Slot 14 Slot 15 Slot 16 Slot 17 Slot 18 — Hybrid Slots

Show SMBus

Show Clocks

- Clear
- PXI_CLK10
- PXIe_CLK100
- PXIe_SYNC100

PXIe_CLK100 | PXIe_SYNC100 | PXI_CLK10

Sync Generator | Clock Generator

VCXO | ÷10 | 10 MHZ OUTPUT | 10 MHZ REF OUT (rear panel BNC)

PLL FEEDBACK | PLL

10 MHZ INPUT | PXI_CLK10_IN | 10 MHZ REF IN (rear panel BNC)

Chassis EPROM

Chassis firmware (customer upgradeable)

x1 **Chassis Manager**

VCXO Input Select | Chassis 10 MHz Correction Signal | 10 MHz Input Select

Show Triggers

- Clear
- PXI_TRIG[0:7]
- PXI_STAR[0:16]
- PXIe_DSTAR A/B/C[0:16]

Show Boards Supported by the Hybrid Slots

Show Hybrid Slot Pin Outs

C20 power connector (rear panel)

To module slots and chassis electronics: 5Vaux, 3.3V, 5V, 12V, -12V

5Vaux | Primary Power Module (PPM) ON

Monitor Processor | Fan Monitor and Control | 5Vstandby | **Power Supply** | Fan 12V

INHIBIT (rear panel): DEF (default) | MAN (manual)

Inhibit (low = off)

FAN (rear panel): HIGH | AUTO

Fan assembly

ON/Standby pushbutton power activation signal

INHIBIT/VOLTAGE MON (rear panel)

DB-9 Connector	
Pin	Signal
1	Logic ground
2	+5 VDC
3	Reserved
4	+3.3 VDC
5	Inhibit (active low)
6	+12 VDC
7	Reserved
8	-12 VDC
9	Logic ground

Show Chassis Views

- Clear
- Front View

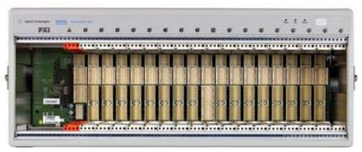

KEYSIGHT TECHNOLOGIES

© Keysight Technologies, Inc. 2012-2014

September 2014 M9018-90006

Nh|vljkw#P <34;D#S[Ih#4;0Vorw#Fkdvvlv#Vwdwxv#Uxlgh

<

Static-safe handling procedures

In this guide, you'll be handling electrostatic-sensitive chassis modules and PC adapters. To avoid electrostatic discharge damage, please read and follow these procedures.

CAUTION

Electrostatic discharge (ESD) can damage or destroy electronic components. Keysight modules and interface cards are shipped in materials which prevent static electricity damage. These items should only be unpacked and inspected at a static-safe work station. The following figure shows an example of a static-safe work station which uses the following two ESD protection methods:

- Conductive table-mat and wrist-strap combination.

- Conductive floor-mat and heel-strap combination.

ESD protection accessories can be purchased from numerous electronics suppliers.

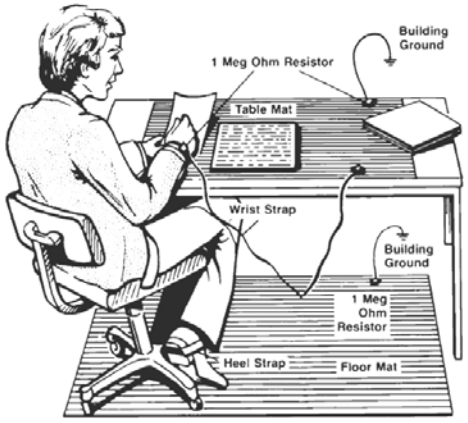

Both ESD protection methods listed above, when used together, provide a significant level of protection. Of the two methods, only the table-mat and wrist-strap combination (method 1) provides adequate ESD protection when used alone. To ensure user safety, the static-safe accessories must provide at least 1 MΩ of isolation from ground.

To avoid damaging components when unpacking or handling a module, do not touch the module connector pins or the components on the printed circuit board. Store all modules and interface cards in anti-static envelopes when not in use.

Additional information on preventing damage to your Keysight equipment can be found at www.keysight.com/find/tips.

STEP 1: Verify the Shipment Contents

Depending on your order, your shipment may arrive in separate boxes. For example, if you order the M9018A chassis, the M9021A PCIe Cable Interface module, and the Y1202A cable, your order will arrive in three separate boxes.

Carefully inspect your shipment for any shipping damage. Report any damage to the shipping agent immediately, as such damage is not covered by warranty.

NOTE **Keysight suggests that you save the chassis shipping container in case it ever becomes necessary to return the chassis to Keysight for service. Appendix B in the User Guide describes how to return the chassis to Keysight for service.**

M9018A chassis shipment verification

Please verify that your chassis shipment contains the following items:

- Keysight M9018A PXIe Chassis
- Power cord
- This document in hard copy
- *Software and Product Information* CD (M9018-10001) – This CD contains software, drivers, and all product documentation in PDF format for the M9018A chassis.
- *Automation-Ready CD with Keysight IO Libraries Suite* (Check for a later version at www.keysight.com/find/iosuite)

CAUTION **The weight of an empty M9018A PXIe chassis (no modules installed in the chassis) is approximately 34 lbs (15.5 kg). Lift the chassis using a single side handle only when the total chassis weight (chassis plus installed modules) does not exceed 75 lbs (34.0 kg). Otherwise use both side handles to lift the chassis.**

Installing modules in the chassis may increase its weight to a point where two people are required to lift the chassis. If two people are not available, use a mechanical lift to lift the chassis. The chassis should be transported using a rolling cart.

STEP 2: Prepare the Hardware and Install the Software

This section provides the following information:

- Host controller hardware and software requirements
- Setting up the chassis on a bench
- Removing and installing filler panels
- Installing an embedded controller in the chassis
- Connecting a host controller PC to the chassis
- Installing software on the host controller PC

CAUTION

The following procedures should be followed to ensure safety and to minimize the possibility of damaging electrical components:

- This product is designed for use in Installation Category II and Pollution Degree 2, per IEC 61010 Second Edition and 664 respectively.
- Mains wiring and connectors shall be compatible with the connector used in the premise electrical system. Failure to ensure adequate earth grounding by not using correct components may cause product damage and serious injury.
- Use only the power cord supplied with the chassis. Keysight power cords ensure continuity between the chassis grounding-type power plug and the safety ground terminal at the power outlet.
- Install the chassis so that the detachable power cord is readily identifiable and is easily reached by the operator. The detachable power cord is the chassis disconnecting device. It disconnects the mains circuits from the mains supply to the chassis before other parts of the chassis. The front panel switch is only a standby switch and is not a LINE switch. Alternatively, an externally installed switch or circuit breaker (which is readily identifiable and is easily reached by the operator) may be used as a disconnecting device.
- The chassis does not support hot-swapping of modules; i.e., inserting and removing modules with the chassis powered up. Before installing modules in the chassis, powered down the chassis and disconnected from AC power.
- To minimize the possibility of electrostatic discharge (ESD) damage to a module while installing it, follow the handling procedures described in “Static-safe handling procedures” on page 11.

Host controller hardware and software requirements

The Keysight IO Libraries Suite is the largest software component in the chassis software installation, and its performance is the biggest contributor to system performance. Therefore, the host controller requirements in Table 3 are based on optimizing the installation and performance of the IO Libraries Suite.

Table 3 Host controller hardware and software requirements

Operating System	Windows 7 SP1	Windows 7 SP1
OS versions	32-bit** and 64-bit, Starter, Home Basic, Home Premium, Professional, Ultimate, Enterprise	32-bit** and 64-bit, Starter, Home Basic, Home Premium, Professional, Ultimate, Enterprise
Processor Speed	1Ghz 32-bit (x86), 1GHz 64-bit (x64), Itanium64 not supported	1Ghz 32-bit (x86), 1GHz 64-bit (x64), Itanium64 not supported
Available computer memory	1 GB minimum	1 GB minimum
Available hard disk space*	1.5 GB available hard disk space, includes: 1GB available for Microsoft .NET Framework 3.5 SP1 100 MB for Keysight IO Libraries Suite	1.5 GB available hard disk space, includes: 1GB available for Microsoft .NET Framework 3.5 SP1 100 MB for Keysight IO Libraries Suite
Video	Support for DirectX 9 graphics with 128 MB graphics memory recommended (Super VGA graphics is supported)	Support for DirectX 9 graphics with 128 MB graphics memory recommended (Super VGA graphics is supported)
Browser	Microsoft Internet Explorer 7 or greater	Microsoft Internet Explorer 7 or greater

* Because of the installation procedure, less memory may be required for operation than is required for installation.

** 32bit operating systems do not support large multi-chassis systems. For details, refer to Keysight's Multiple PXIe and AXIe Chassis Configuration tool. This tool is available on the M9018A Product information CD as well as on line at: www.keysight.com/find/pxie-multichassis.

Refer to the M9036A Embedded Controller User Guide for supported operating systems on the M9036A.

Setting up the chassis on a bench

NOTE This guide assumes that chassis preparation, turn-on and verification are performed on the bench prior to installing the chassis in a rack. If you prefer to install the chassis in a rack first, please see the M9018A User Guide on the Software and Product Information CD for rack mounting instructions.

The primary consideration in using the chassis on a bench is ensuring adequate ventilation for cooling. Cooling air enters through the vent holes on the bottom, sides, and front of the chassis, and exits through the rear of the chassis. For bench use, ensure that the feet are installed on the chassis so that air can enter through the bottom of the chassis. Also ensure that there is at least 50 mm (2 inches) of clearance on the sides, front, and rear of the chassis.

Removing and installing filler panels

The chassis is shipped from the factory with all filler panels installed. For the 18 slots, the filler panels are 20.32 mm (.8 inches) wide; these are referred to as *narrow filler panels*. The expansion slot to the left of slot 1 is three slots wide; hence, the filler panel for the expansion slot is 60.96 mm (2.4 inches) wide and is referred to as a *wide filler panel*.

The filler panels are held in place by captive screws (two screws for narrow filler panels and four screws for wide filler panels). When installing a filler panel, the captive screws should be tightened securely to ensure the filler panel is well-grounded to the chassis.

Ensure that filler panels are installed in all empty slots. Missing filler panels will impact cooling of the chassis and may cause RFI (radio frequency interference) with other devices.

NOTE In addition to installing modules and filler panels in chassis slots, air inlet modules can also be installed in chassis slots. These modules can be placed adjacent to high power modules for additional cooling. Keysight provides an air inlet module kit as listed in “Appendix A: Chassis and Accessory Model Numbers” on page 38.

NOTE Please do not install modules in the peripheral slots yet. In this step, only slot 1, the system controller slot, will have a module installed. Deferring the installation of other modules until later will allow the chassis to be turned on and verified in its simplest configuration.

To prepare the hardware, either an embedded controller or a PCIe cable interface module will be installed in slot 1, depending on your configuration. Both of these installations are described in this step.

Setting the M9021A power slide switch

The chassis contains a slide switch that applies power to certain pins on the slot 1 connector in order to provide power to the M9021A Cable Interface module. This switch is located on the backplane board and is accessible through the 3-wide expansion slot to the left of slot 1. For a description of this switch, see the "Static-safe handling procedures" on page 11, and select the **Front View** check box under **Show Chassis Views**. Alternatively, go to www.keysight.com/find/pxi-chassis and select **M9021A PCIe Cable Interface** to view its installation manual.

As shown on the block diagram and in the installation manual, this switch must be positioned to the *right* prior to installation of the M9021A Cable Interface module in slot 1, and must be positioned to the *left* prior to installation of any other module, including an embedded controller, in slot 1.

WARNING **The chassis power cord shall be removed prior to changing the position of the M9021A power slide switch. Failure to remove the power cord could result in accidental contact with the adjacent high current and energy source connector, resulting in potential burns.**

To change the position of the slide switch, perform the following steps:

1. Turn off the chassis by first pressing the ON/Standby pushbutton and then detach the chassis power cord from AC power.
2. Reach in through the three-wise expansion slot to the left of slot 1, and position the M9021A power slide switch to the right in order to provide power to the M9021 Cable Interface module. The slide switch can be moved either with your fingertip or by using a tool such as a small screwdriver.

NOTE If you're installing an embedded controller, position the slide switch to the *left* in order to remove power from the pins intended to supply power to the M9021 Cable Interface module.

Connecting a remote controller PC to the chassis

A remote controller is an external, Windows-based PC that connects to the chassis through a PCIe cable. The remote controller can be a desktop PC, a laptop PC, or a rack-mounted PC.

NOTE

In order for a PC to serve as a remote controller, its BIOS must support enumeration of the PCIe slots in the chassis; many computers are not capable of enumerating a sufficient number of PCIe slots to ensure that slots in an external chassis are enumerated.

Keysight provides the document "Tested Computer List Technical Note" which lists the embedded, desktop, laptop, and rack-mounted PCs that have been verified to enumerate the PCIe slots in the M9018A chassis. Please use this document, available under the Document Library tab at" www.keysight.com/find/M9018A, to guide your selection of remote controller PCs.

For general controller requirements, such as RAM and hard disk requirements, please see "Host controller hardware and software requirements" on page 14.

To connect a remote controller PC to the chassis, perform the three steps listed below. When handling PC adapter cards and chassis modules, be sure to follow the static-safe procedures described in "Static-safe handling procedures" on page 11.

1 Install a PCIe cable interface module in the chassis

The first step is to install a PCIe cable interface module, such as the Keysight M9021A PCIe Cable Interface module, in the chassis system controller slot (slot 1). Cable interface modules contain a PCIe cable connector that permits a PCIe cable to be connected between the module and the remote controller. To install the cable interface module in slot 1, follow the instructions provided with the module as you perform the following steps:

a Turn the chassis off and unplug the chassis from AC power.

b Before inserting the module, inspect the chassis slot to ensure there are no bent pins on the slot connectors.

CAUTION

- To avoid damaging the module, do not touch exposed connectors or components on the printed circuit board as you install the module.
- Modules are usually shipped with thread protectors on the mounting screw threads. These protectors must be removed before installing modules in the chassis.

c Insert the module in the chassis slot by placing the module card edges into the top and bottom module guides.

CAUTION **Take care to ensure that the module is aligned perpendicularly to the chassis as you begin sliding it in. Otherwise, it's possible for components on the module (or on adjacent modules) to be damaged by contact between modules.**

d With the injector/ejector handle in the down position, carefully slide the module to the rear of the chassis. When you begin to feel resistance from the backplane connectors, push up on the injector/ejector handle to complete insertion of the module and latch it into place.

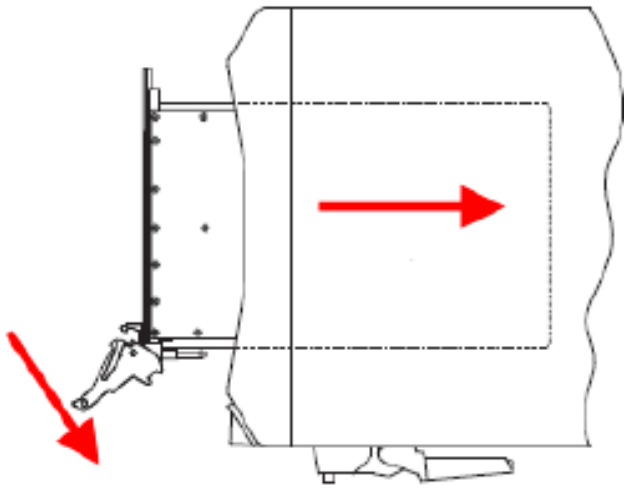

e Secure the module front panel to the chassis using the captive front panel mounting screws. All modules have two captive mounting screws. Tighten the screws for both mechanical security and to ensure proper grounding of the front panel.

IMPORTANT: Ensure that all empty chassis slots are covered by filler panels or air inlet modules.

f Plug in and power up the chassis. Verify that the chassis fans are operating and free of obstructions that may restrict airflow.

2 Install a PCIe adapter in the remote controller PC

Keysight offers the M9045A/B PCIe ExpressCard Adapter (x1) for laptop PCs and the M9048A PCIe Desktop Adapter (x8) for desktop and rack-mounted PCs. To install an adapter in your remote controller PC, follow the instructions provided with your adapter.

3 Connect a PCIe cable between the remote controller PC and the chassis

Connect the appropriate PCIe cable between the remote controller PCIe interface adapter and the chassis PCIe cable interface module.

NOTE **All PCIe cable connector components, including the connectors on the cables and the receptacles on the M9021A/M9045A/B/M9048A interface products, are limited to 250 mating cycles. Beyond this, signal integrity will be impaired. Therefore, the chassis and its accessories should not be used in applications where the number of connector mating cycles will exceed 250 cycles.**

Installing an embedded controller PC in the chassis

An embedded controller, such as the Keysight M9036A Embedded Controller, is a small form factor, Windows-based PC that is designed to be installed in the system controller slot (slot 1) of the chassis. The embedded controller also occupies the two or three expansion slots to the left of slot 1; the expansion slot does not contain a connector.

CAUTION **Before installing an embedded controller, turn the chassis off and unplug it from AC power.**

To install an embedded controller in the chassis, remove the filler panel in slot 1 and the three-wide filler panel to the left of slot 1. Keysight recommends that you retain these filler panels for future use—for example, if you later replace the embedded controller with a PCIe cable interface module to interface to a remote controller. Because the PCIe cable interface module only consumes one slot, the expansion slot must be covered with the three-wide filler panel to maintain proper airflow and RFI shielding.

CAUTION **To avoid damaging the embedded controller during installation, do not touch exposed connector pins or components on the printed circuit boards.**

Before installing the embedded controller, see "Setting the M9021A power slide switch" on page 16. Set the slide switch to the *left* in order to remove power from pins that are intended to be used by the M9021A Cable Interface module.

To install your embedded controller, follow the instructions provided earlier for the PCIe cable interface module as well as the instructions provided with your controller.

Once the embedded controller is installed in the chassis, you can interface to the controller by connecting a keyboard, mouse, and monitor to it; alternatively, you can interface to the controller through its network port using software such as Microsoft Remote Desktop.

NOTE

Keysight IO Libraries Suite and the M9018A chassis drivers are pre-installed on the M9036A Embedded Controller. If you're using this embedded controller, you can skip the remainder of this step, and proceed to "STEP 3: Turn On and Verify Operation of the Chassis System" on page 24.

Installation of Keysight software on the embedded controller is described in the next section. However, because the software is provided on CDs and because embedded controllers typically do not have optical drives, you should determine which software installation option will work best for you. The installation options include:

- Obtain a USB interface optical drive and connect it to one of the embedded controller USB ports.
- Copy the CD software to the embedded controller hard drive, and then execute the installation process from the hard drive. To do this, the CD software can be read on a PC optical drive, and then copied to the embedded controller over the network or by using a USB flash drive.
- If the embedded controller is connected to the network, you can download the required software from www.keysight.com/find/M9018A, and not use the CDs supplied with the chassis.

M9018A PCIe Link Configuration

PCIe link configuration refers to how the PXIe chassis PCIe Switch Fabric is configured to connect PCI Express signals between slot 1, the system controller slot, and the other chassis slots. For a review of the supported PCIe link configurations, please refer to the M9018A User Guide.

The M9018A chassis ships from the factory in "2-Link Configuration: 1x8". This configuration, referred to as 1x8, provides one x8 PCIe link from the system controller slot to the PCIe Switch Fabric. Use the 1x8 configuration with laptop computer PCIe adapters such as the M9045A/B. This link can be routed by the PCIe Switch Fabric to the chassis slots as either x4 or x8 links.

The other supported PCIe link configurations are:

- **2-Link Configuration:** 1x8 [Limited to PCIe Gen1 speed] — This fabric is specifically for use in subordinate chassis in multi-chassis configurations. For details, refer to *Keysight's Multiple PXIe and AXIe Chassis Configuration* tool. This tool is available on the M9018A Product information CD as well as on line at: www.keysight.com/find/pxie-multichassis.
- **2-Link Configuration:** 2x8 — Referred to as 2x8, this configuration provides two x8 links from the system controller slot to the PCIe Switch Fabric. Link 2 can be routed by the PCIe Switch Fabric to slots 2-9, while Link 1 can be routed to slots 10-18.
- **4-Link Configuration:** 4x4 — Referred to as 4x4, this configuration provides four x4 links from the system controller slot to the PCIe Switch Fabric. Link 1 can be routed by the PCIe Switch Fabric to slots 10-14, Link 2 can be routed to slots 15-18, Link 3 can be routed to slots 2-5, and Link 4 can be routed to slots 6-9.

If your system design requires another PCIe link configuration, such as 2x8, you'll need to use the chassis **Configurator** utility to change the PCIe Switch Fabric from 1x8 to 2x8.

The **Configurator** utility program is available from the Windows **Start** button; select **All Programs > Keysight > M9018 > PCIe Switch Fabric Configurator**. Instructions for using the **Configurator** program are provided in the M9018A Chassis User Guide.

NOTE For more detailed information, refer to the M9018A PXIe Chassis User Guide.

Installing software on the host controller

This section describes how to install the host controller software, and applies to both remote controllers and embedded controllers. To install the software, you must have administrator privileges on the host controller, and the software must be installed in the following order:

1 **Keysight IO Libraries Suite, version 16.2 or later**—This is a collection of libraries and utilities that enable you to connect your chassis to the host controller and run programs on the host controller that interact with the chassis. The IO Libraries Suite is used with all Keysight instruments, and is not specific to the M9018A chassis. Keysight recommends using the latest version of IO Libraries Suite available.

2 **M9018A chassis drivers**—This software consists of the chassis soft front panel (SFP) and the IVI-COM, IVI-C, LabVIEW, and MATLAB drivers for the M9018A chassis. These drivers each provide an API (application programming interface) that can be used to develop programs that interface to the chassis.

NOTE The software installation process is based on using the CDs that are shipped with the chassis. However, as noted in the previous section, you'll need to adapt the installation process if you have an embedded controller.

Compatibility of the M9018A Chassis Drivers with Keysight IO Libraries Suite

The table below shows the chassis driver releases and their compatibility with the releases of Keysight IO Libraries Suite. The table is ordered by M9018A chassis driver releases, with the most recent release lowest in the table.

Table 4 Chassis Drivers and IO Libraries Suite compatibility

M9018A Chassis Drivers Compatibility with Keysight IO Libraries Suite		
M9018A Chassis Drivers Version	IO Libraries Suite Minimum Version	IO Libraries Suite Version the Chassis Drivers were Released With
1.0.1.3	16.0	16.0
1.2.1.x	16.2	16.2
1.3.x.1	16.2	16.3 Update 1
1.5.21	16.3 Update 1	16.3 Update 1

Keysight recommends using the latest version of IO Libraries Suite available. However, for those customers interested in using the version of IO Libraries Suite that the M9018A chassis drivers were released with, that information is provided in the above table.

Installing the Keysight IO Libraries Suite

This section describes installation of the Keysight IO Libraries Suite. Note that IO Libraries Suite version 16.0 or later is required, version 16.2 or later is recommended.

NOTE Only one installation of the Keysight IO Libraries Suite is required on the host controller PC. This installation is used by both the M9018A drivers that are installed in the next section and the drivers associated with each module that you install in the chassis.

NOTE Two libraries, **IVI Shared Components** and **VISA Shared Components**, are required by the IO Libraries Suite. If these libraries are not already installed on your controller, the IO Libraries Suite installer will install them. If **IVI Shared Components** and **VISA Shared Components** are already installed, the IO Libraries Suite installer will upgrade these libraries to the latest version, if necessary, using the same installation location used by the previous version.

For information on Keysight IO Libraries Suite and to get the latest version, go to www.keysight.com/find/iosuite.

Installing the M9018A chassis drivers

The M9018A chassis drivers consist of three primary components, the M9018A soft front panel (SFP), the M9018A drivers, and the PCIe Switch Fabric **Configurator** program. To install the M9018A software, perform the following steps:

1. Insert the M9018A Software and Product Information CD into your optical drive. This should automatically display a browser window. If this window isn't displayed, use Windows Explorer to locate **autorun.exe** at the root level of the CD and then execute that program.
2. Click the **Install M9018 Software** link, which will bring up the Keysight M9018A InstallShield Wizard.
3. Click **Next** and follow the prompts to install the M9018A software. The final dialog will prompt you to restart your computer to complete the installation.

Using the SFP is described in "Using the soft front panel to monitor the chassis" on page 31. The M9018A chassis drivers are used to develop host controller programs to interface to the chassis, and are described in the M9018A User Guide. The **PCIe Switch Fabric Configurator** program is also described in the User Guide.

STEP 3: Turn On and Verify Operation of the Chassis System

This section provides the following information:

- Powering up the chassis
- Operation of the three LEDs mounted on the front of the chassis
- Using Connection Expert to connect to the M9018A chassis
- Using the chassis soft front panel (SFP) to verify operation of the chassis

NOTE

- Please do not install modules in the peripheral slots yet—this is done in STEP 4. The only module that should be installed in the chassis at this time is either an embedded controller or a PCIe cable interface module in slot 1 as described in STEP 2.
- This guide assumes that chassis preparation, turn-on and verification are performed on the bench prior to installing the chassis in a rack. If you prefer to install the chassis in a rack first, please see the M9018A User Guide on the Software and Product Information CD for rack mounting information.
- If you encounter difficulty in turning on the chassis system, please see the troubleshooting information in the M9018A User Guide.

CAUTION

This instrument has auto-ranging power supplies, meaning that the chassis does not have a voltage selector switch. Ensure that the AC supply line voltage is within the range of 100-120 VAC or 220-240 VAC, and 50/60 Hz frequency.

WARNING

If this product is not used as specified, the protection provided by the equipment could be impaired. This product must be used in a normal condition (in which all means for protection are intact) only.

NOTE

When you press the chassis power-on button, if the chassis does not power up and the front panel LEDs do not light, it is possible for the chassis to be in a safety shutdown state. Remove the chassis AC power cord from the chassis for one minute. Reconnect the power cord and turn on the chassis again. If it still does not power on, refer to the troubleshooting information in the M9018A User Guide.

Power sequencing of the chassis

This section describes the power sequencing required for a remote controller PC and the chassis. Also, the two methods of powering up the chassis are described.

Power sequence requirements

When powering up the system, the chassis should be powered up first. After powering up the chassis, you should wait at least three seconds before turning on the PC. The chassis front panel temperature LED, which is on for three seconds after the chassis is powered up, provides a convenient way to measure this delay, as shown below.

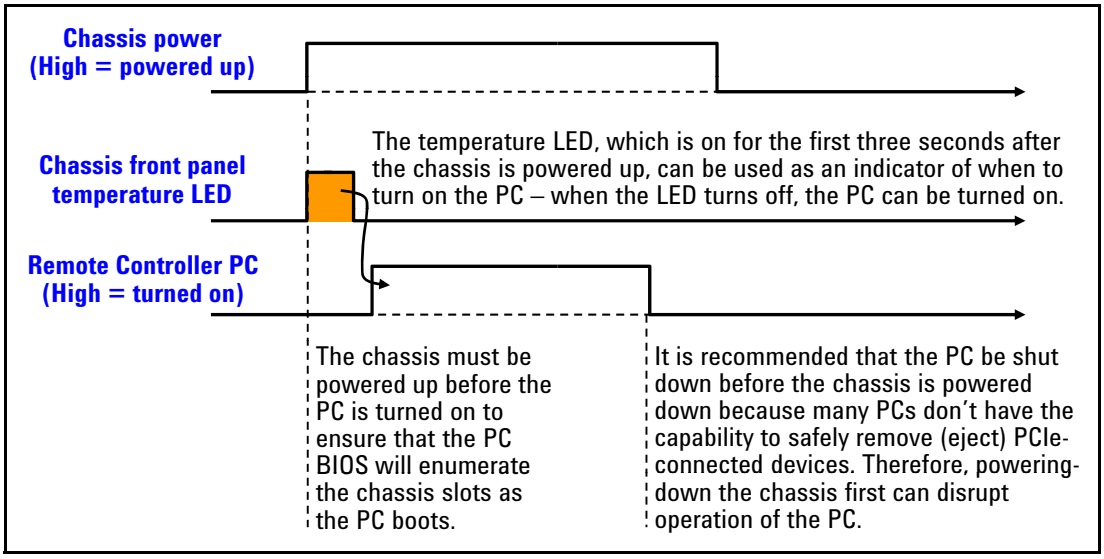

Figure 4 Wait three seconds after powering up the chassis before turning on the PC

The PC should be shut down before the chassis is powered down. This will prevent the chassis, as it's being powered down, from disrupting operation of the PC.

In brief, the PC should be off whenever the chassis is powered up or down. Because chassis modules are not hot-swappable, chassis modules should only be added or removed when the chassis is powered down.

The above power sequence doesn't apply to an embedded controller installed in the chassis because the embedded controller and chassis are powered together.

Methods of powering up the chassis

The method of powering up the chassis depends on the position of the **INHIBIT** rear panel switch, which can be set to the **DEF**#(default) position or to the **MAN** (manual) position). These two methods are shown on the "M9018A interactive block diagram" on page 6 and work as follows:

- **INHIBIT** switch in the **DEF**#position – In this position, the front panel power pushbutton is used to switch the chassis between ON and Standby–hence, this pushbutton is known as the *ON/Standby pushbutton*. Using this pushbutton requires that a module is installed in the system controller slot (slot 1). This can be a module such as the Keysight M9021A PCIe Cable Interface module or an embedded controller.
- **INHIBIT**#switch in the **MAN** position – In this position, the **Inhibit** signal on the rear panel DB-9 connector controls chassis power. The chassis is powered up by applying a logic high signal to the **Inhibit** signal. When the **Inhibit** signal is low, the chassis is in Standby (off except for 5Vaux, an auxiliary power supply).

Keysight recommends leaving the **INHIBIT** switch in the **DEF** position when connecting the AC power cord to the chassis. After inserting the power AC power cord, then move the **INHIBIT** switch to the **MAN** position.

Use of the ON/Standby pushbutton to power up the chassis is assumed unless otherwise noted. For information on using the **Inhibit**#signal on the rear panel DB-9 connector to power the chassis up and down, please see the M9018A User Guide.

Chassis front panel LEDs

The chassis contains three LEDs on its front panel to the left of the ON/Standby (power) pushbutton, as shown in Figure 5.

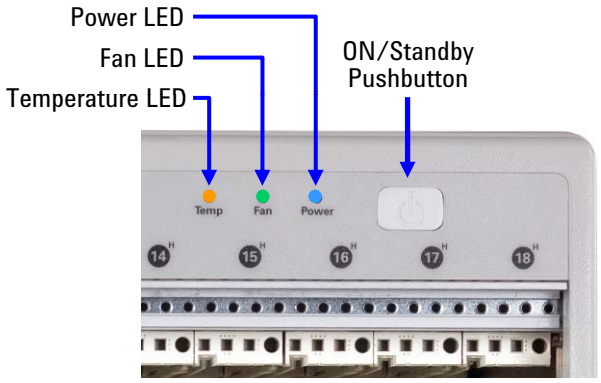

Figure 5 The three front panel LEDs

The front panel LEDs, depending on whether they are off, on continuously, or flashing, provide important information on the status of the chassis, and should be monitored regularly. Table 5 lists each LED and describes the information it provides.

Table 5 Information provided by the front panel LEDs

LED	Off	On continuously	Flashing
Power LED (blue)	Indicates that the chassis is turned off. If you attempt to turn the chassis on but the Power LED remains off, this can indicate several possible problems – please see the M9018A User Guide for details.	Indicates that the four main supply voltages (3.3V, 5V, 12V, and -12V) plus 5Vaux are within their respective limits. The factory default limits are plus and minus 5% around the nominal values. The 3.3V, 5V, 12V, and -12V limits can be individually changed for each supply using the SFP and programmatically. The limits, if changed, are reset to 5% at the next chassis power cycle.	Indicates that one or more of the four supply voltages are outside of their limits, either the 5% factory default limits or, if changed, the user set limits. Refer to the M9018A User Guide for troubleshooting suggestions. If the power supply condition causing the flashing to occur is no longer present, the Power LED will return to on continuously, i.e. the flashing state is not latched.
Fan LED (green)	Typically indicates that the chassis is turned off. This could also indicate a failed LED or a failure of the LED drive circuitry. See the M9018A User Guide for details.	Indicates that all three fans are operating above 1000 RPM, the factory default limit. The fan speed limit can be changed using the SFP or programmatically. The limit, if changed, is reset back to 1000 RPM at the next chassis power cycle.	Indicates that one or more of the three fans are operating below the limit, either the 1000 RPM factory- default limit or, if changed, the user-set limit. If the fan speed condition causing the flashing to occur is no longer present, the Fan LED will return to on continuously, i.e. the flashing state is not latched.
Temp (Temperature) LED (amber)	To avoid this amber LED being interpreted as indicating a temperature problem in the on state, this LED is *off* if the chassis temperatures are OK. To allow you to validate that this LED is working, the LED is turned on for the first three seconds after the chassis is powered up.	This LED is never on continuously. It will either be off if the temperatures reported by the eight temperature sensors are all below the limit (see left column), or it will be flashing if one or more of the temperature sensors are reporting a temperature above the limit (see right column).	Indicates that at least one of the eight temperature sensors is reporting a temperature above the limit, either the 70°C factory default limit or, if changed, the user set limit.The limit, if changed, is reset back to 70°C at the next chassis power cycle. If the temperature condition causing the flashing to occur is no longer present, the Temperature LED will turn off, indicating that the chassis temperatures are OK.

The chassis will not intentionally modify its operation because of conditions that cause one or more LEDs to flash. In other words, the chassis will attempt to continue normal operation despite flashing LED(s). However, a flashing LED may

indicate a condition that will prevent the chassis from operating correctly. For example, a flashing Fan LED indicates that one or more rear panel fans are under speed, which may cause the temperature of the chassis to rise and exceed specifications. This, in turn, may cause a thermal shutdown of the power supply. Therefore, flashing LEDs should be tended to promptly. Refer to the M9018A User Guide for further information.

PC startup requirements for Keysight IO Libraries Suite

There are additional PC startup requirements for Keysight IO Libraries Suite over and above the power sequence presented earlier. This section describes the PC startup requirements for Keysight IO Libraries Suite, version 16.0 and version 16.1 (and later). Improvements have been made in Keysight IO Libraries Suite 16.1 that simplify the PC startup process, which is why Keysight recommends use of version 16.1 or later.

The specific component of interest in Keysight IO Libraries Suite is Connection Expert. The next two sections describe the PC startup requirements for Connection Expert 16.0 and 16.1.

PC startup events for Connection Expert 16.0

In addition to following the power sequence described earlier, the PC must be restarted after Windows comes up to ensure that the chassis is recognized by Connection Expert 16.0 when it starts. Figure 6 shows the complete sequence leading up to starting Connection Expert.

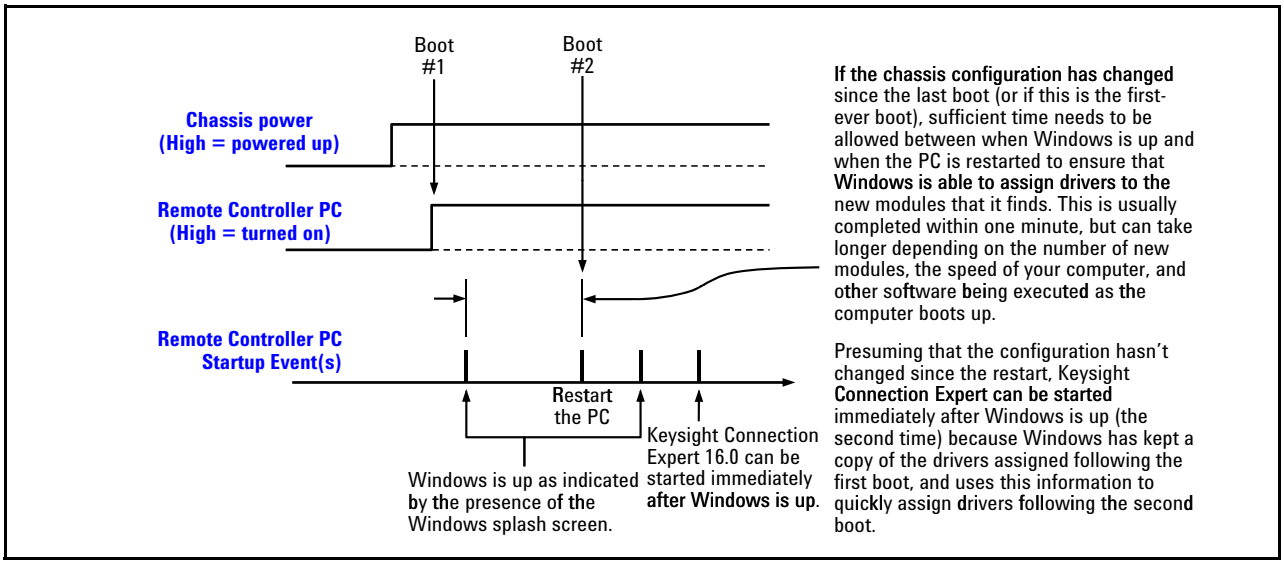

Figure 6 Restarting of the Remote Controller PC after Windows starts for Connection Expert 16.0

Restarting of the PC after Windows is up ensures that Connection Expert 16.0 will recognize the chassis. Note the need, before doing the restart, to wait a sufficient length of time after Windows comes up if the chassis configuration has changed. This wait time is also required on the first-ever boot of the PC with of the chassis.

If Connection Expert 16.0 ever fails to recognize the chassis or appears to have an incorrect view of the chassis modules, the PC should be restarted using the sequence shown in Figure 6.

While Figure 6 depicts a system with a remote controller PC, the same requirement applies to a chassis containing an embedded controller. After powering up the chassis (which powers up the embedded controller), the embedded controller should be restarted.

PC startup events for Connection Expert 16.1 or later

With IO Libraries Suite 16.1 or later, the need for the restart shown in Figure 6 has been reduced. However, there is still a need, before starting Connection Expert, to wait a sufficient length of time after Windows comes up if the chassis configuration has changed. This wait time is also required on the first-ever boot of the PC with of the chassis. This sequence is shown in Figure 7.

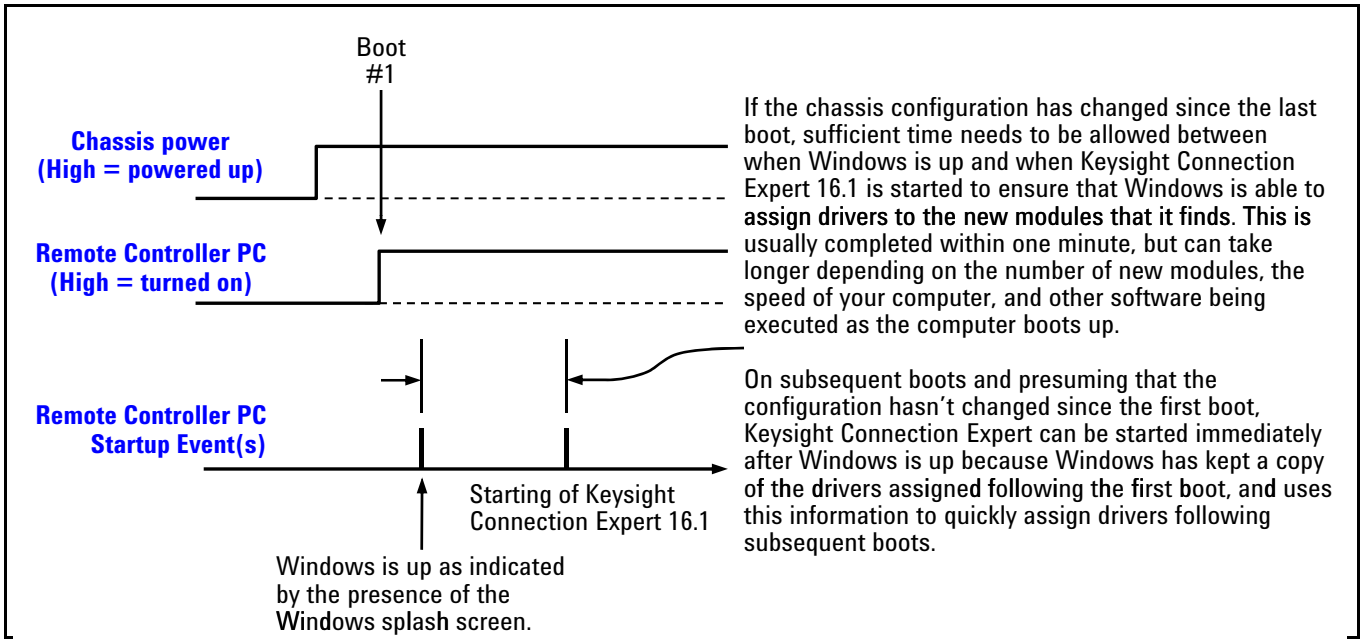

Figure 7 Startup sequence for Connection Expert 16.1 or later

NOTE Even with IO Libraries 16.1 and later versions, it is always advisable to boot the PC a second time to ensure that the PC properly enumerates the chassis.

Using Connection Expert to connect to the chassis

This section describes use of Connection Expert to confirm that the host controller can connect to the chassis and applies to both versions, 16.0 and 16.1.

1 First, start Connection Expert on the host controller. Once Connection Expert is running, a chassis indicator should appear under the PXIO label in the Instrument I/O on this PC pane as shown in Figure 8—in this case, the chassis indicator is “Chassis1”. Clicking “Chassis1” displays the contents of each slot in the M9018A chassis in the right pane under the label Keysight model M9018A PXI chassis.

2

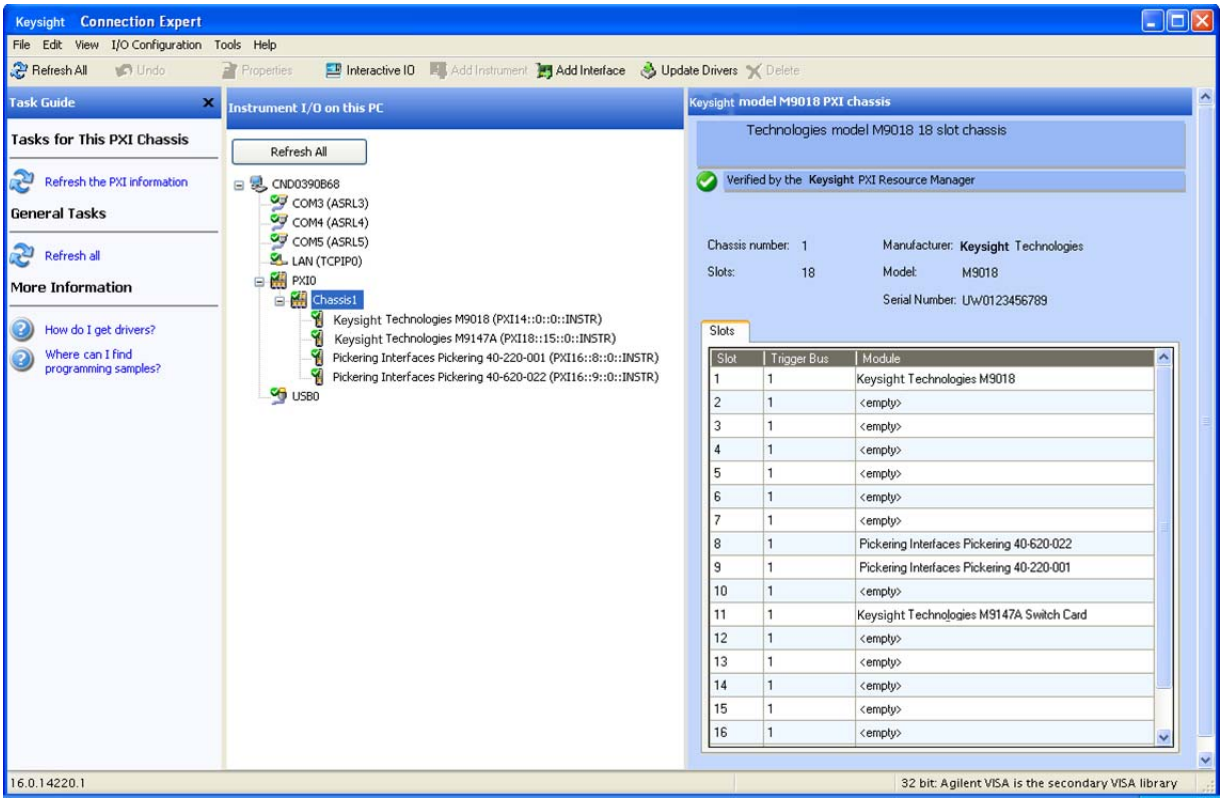

Figure 8 Connection Expert display of the chassis contents

If Connection Expert successfully displays the chassis slots, please continue to the next section, and verify that the soft front panel can interface to the chassis. If Connection Expert fails to display the chassis slots, see the M9018A User Guide for troubleshooting suggestions.

Using the soft front panel to monitor the chassis

The M9018A soft front panel (SFP) can be used both to monitor the status of the chassis as well as configure various chassis parameters, such as the maximum temperature threshold for the temperature alarm. This section describes how to use the SFP to *monitor* the status of the chassis; configuring chassis parameters is described in the M9018A User Guide.

Starting the SFP and selecting Hardware Mode or Simulation Mode

The SFP has two modes, Hardware Mode and Simulation Mode. In Hardware Mode, the SFP interacts with the chassis itself. The SFP will display chassis information and allow you to set chassis parameters such as temperature thresholds and voltage alarms.

In Simulation Mode, the SFP *simulates* chassis operation and does not communicate with the chassis. Simulation Mode is useful to learn the capabilities of the SFP and the chassis. In SImulation Mode, the alarms are not active.

Independent of whether you plan to run the SFP in Hardware Mode or Simulation Mode, the SFP is started from the Vwduwmenu as follows:

Start > All Programs > Keysight > M9018A > M9018 SFP

If no chassis has been detected by Connection Expert, the SFP startup dialog will appear as shown in Figure 9. The absence of a chassis listed under P rgxdnv indicates that no chassis has been detected; therefore, the SFP can only be run in Simulation Mode.

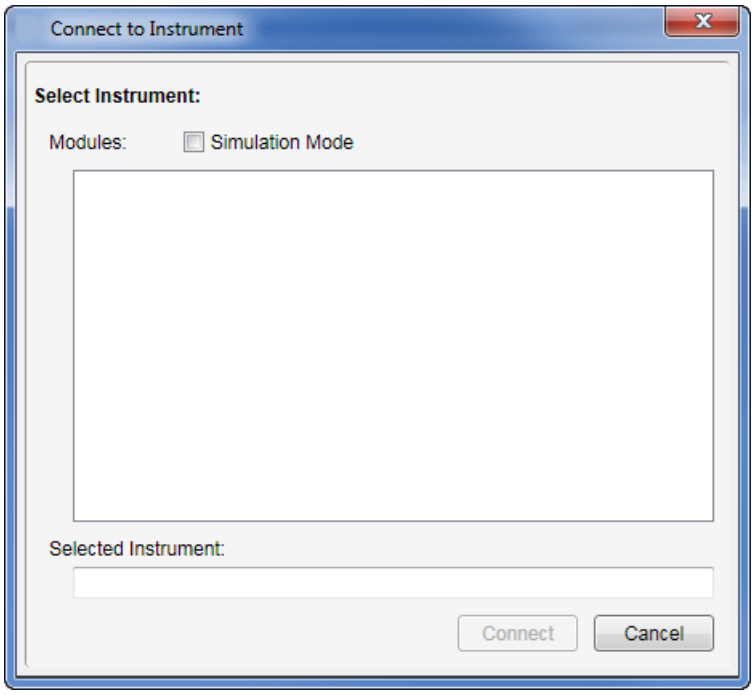

Figure 9 SFP startup dialog when no chassis is detected.

To run in Simulation Mode, select the Vlpxodwlrq#P rgh check box in Figure 9. This will display “M9018A” in the P rgxdnv list. Then click “M9018A” in the P rgxdnv list to select it, which will display “M9018A” in the Vhdnfwhg#Iqvwuxp hqw# field. Click Frqqhfw to start the SFP in Simulation Mode.

If a chassis has been detected, “M9018A” and the PCI bus address of the chassis will be listed under P rgxdnv, as shown in Figure 10.

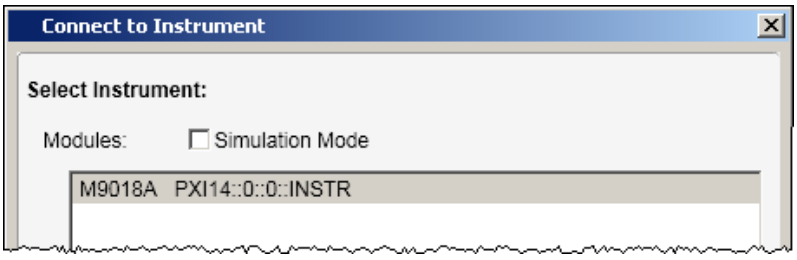

Figure 10 SFP startup dialog when a chassis is detected by Connection Expert

Click the chassis entry under P rgxdnv to select it, which will display the chassis entry in the Vhdnfwhg#Iqvwuxp hqw# field. Click Frqqhfw to start the SFP in Hardware Mode.

If Connection Expert detects a chassis, the chassis will be listed in Connection Expert. This provides another option for starting the SFP. To start the SFP from Connection Expert, select the chassis in the **Instruments I/O on this PC** pane, select the **Installed Drivers** tab in the right pane, and click **Start SFP** as shown in Figure 11. This will automatically bring up the SFP in Hardware Mode because of the presence of the chassis.

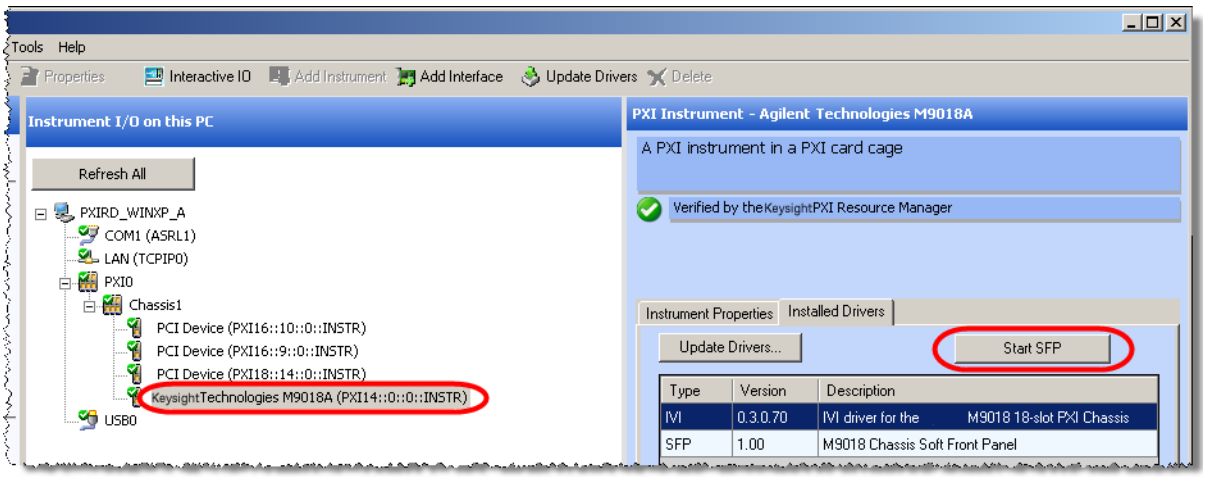

Figure 11 Starting the SFP from Connection Expert

Note that only a single instance of the SFP can be run at one time on the host controller PC.

Using the SFP to monitor the chassis

This section describes how to use the SFP to monitor the chassis in Hardware Mode.

NOTE

To prevent inadvertently changing parameters such as the chassis temperature alarm, the SFP includes an Allow Control check box that is unchecked by default as shown below. The unchecked box prevents any configuration change from being made. In the M9018A User Guide, which describes how to use the SFP to configure the chassis, this check box will be checked.

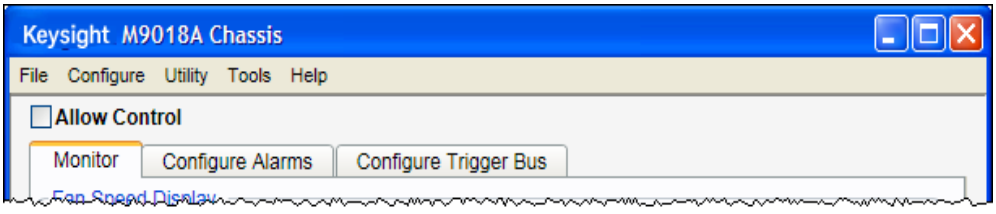

Figure 12 shows the Monitor screen of the SFP. This screen displays the speed of the three fans, the temperatures reported by the eight backplane temperature sensors, and the four main power supply voltages. This screen also displays the source of the 10 MHz reference clock and the current PCIe link configuration.

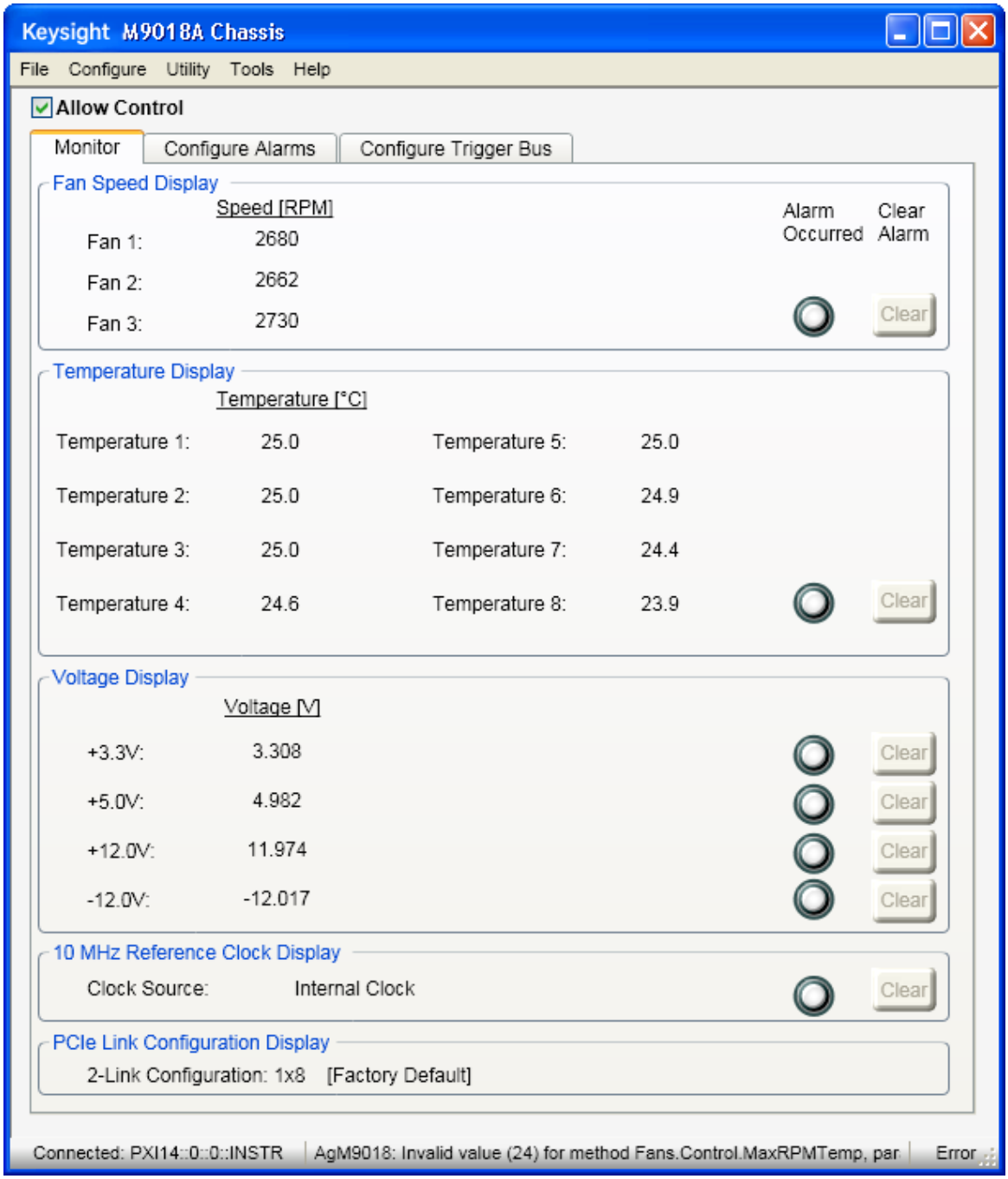

Figure 12 The `P rqlwru`screen of the M9018A soft front panel

As you can see, there are seven Alarm Occurred indicators on the right side of the P rqlwruscreen. These alarms are enabled by default and operate as described in Table 6. If the chassis is operating normally and is using the default alarm thresholds, none of the alarms should be set. For information on configuring these alarms to other than their default thresholds, please see the M9018A User Guide.

Table 6 SFP default alarm thresholds and operation

Alarm	Description
Fan speed alarm	The fan speed alarm is illuminated if the speed of any of the three fans drops below 1000 RPM. The alarm is latched and will persist even if all fans resume operation above 1000 RPM. The fan speed alarm can be cleared using its Clear button; however, if any of the three fans are still operating below 1000 RPM when the Clear button is clicked, the fan speed alarm will remain illuminated.
Temperature alarm	The temperature alarm is illuminated if the temperature reported by any of the eight temperature sensors is above 70 °C. The alarm is latched and will persist even if all temperature sensors subsequently report temperatures below 70 °C. The temperature alarm can be cleared using its Clear button; however, if any of the temperature sensors are still reporting a temperature above 70 °C when the Clear button is clicked, the temperature alarm will remain illuminated.
3.3V alarm	Each of the four voltage alarms has upper and lower voltage limits of 5% about the nominal voltage. For example, the 12V alarm has an upper voltage limit of 12.6V and a lower voltage limit of 11.4V. A particular voltage alarm is illuminated if that voltage falls outside of the range specified by the upper and lower voltage limits. The alarm signal is latched and will persist even if the voltage subsequently returns to within the specified range. The voltage alarm can be cleared using the Clear button; however, if the voltage is still outside of the specified range when the Clear button is clicked, the voltage alarm will remain illuminated.
5V alarm	
12V alarm	
-12V alarm	
10 MHz reference clock source changed alarm	This alarm is illuminated if the 10 MHz reference clock source changes. For example, if an external 10 MHz reference clock source is being provided through the rear panel BNC connector, that signal will be used as the chassis 10 MHz reference clock source. If this signal is disconnected, the 10 MHz reference clock source will revert to the chassis internal 10 MHz reference clock source, and this alarm will be illuminated. This alarm, like the other alarms, is latched and can be cleared using its Clear button.

STEP 4: Overview of Installing and Verifying Keysight Modules

This section provides an overview of installing Keysight modules in the chassis and verifying their operation. For detailed instructions, see the documentation provided with your module.

NOTE

Installation of Keysight modules should only be performed if you've been able to successfully view the chassis slots with Connection Expert as described in "Using Connection Expert to connect to the chassis" on page 30. Preferably you've also been able to use the M9018A soft front panel with the chassis as well.

CAUTION

The following procedures should be followed to ensure safety and to minimize the possibility of damaging electrical components:

- Before installing any module in the chassis, the chassis must be disconnected from AC power.
- To minimize the possibility of ESD damage to a module while installing it, follow the static-safe handling procedures described in "Static-safe handling procedures" on page 11. Do not touch exposed module connector pins or components on the printed circuit boards. When removing modules from the chassis, store them in anti-static envelopes.
- Modules are usually shipped with thread protectors on the mounting screw threads. These protectors must be removed before installing modules in the chassis.

CAUTION

If you're using a remote controller, ensure that you follow the power sequencing requirements shown in "Power sequencing of the chassis" on page 25. This sequencing is important both when powering up the chassis and powering down the chassis.

Installing modules

If you plan to install multiple high power Keysight modules in the chassis, see the M9018A User Guide for information on power planning and chassis cooling. Prior to installing your modules, please review the installation instructions for the PCIe cable interface module in "Install a PCIe cable interface module in the chassis" on page 17 – the instructions for this module are applicable to all modules installed in the chassis.

Installing the module software

NOTE

The M9018A chassis drivers that you installed in "Installing the M9018A chassis drivers" on page 23 are completely separate from your module software. The chassis drivers permit interfacing to chassis functionality such as temperature sensors and fan speeds, while your module software is required to interface to your particular module.

The documentation for your Keysight module will indicate that Keysight IO Library Suite should be installed. However, only one installation of IO Library Suite is required on the host controller PC. Presuming that you installed IO Libraries Suite as described in "Installing the Keysight IO Libraries Suite" on page 23, it does not need to be installed again when installing software for Keysight modules. If you did not install IO Libraries Suite earlier, it must be installed *before* you install your module-specific software.

After ensuring that IO Libraries Suite is installed, follow the instructions provided with your module to install its software.

Verifying your module

Follow the instructions provided with your Keysight module to verify its operation. Module verification typically includes the following steps:

1. Verify that your module is displayed within the chassis in Connection Expert as described in "Using Connection Expert to connect to the chassis" on page 30, and as described in your module documentation.
2. Bring up the soft front panel (SFP) for your module, if available, and verify that the SFP can interface correctly to the module.

Appendix A: Chassis and Accessory Model Numbers

Table 7 lists the model number of the chassis and its accessories. Information on these parts can be found by starting at www.keysight.com/find/pxi-chassis.

Table 7 Chassis and accessory model numbers

Model Number	Description
M9018A	PXIe Chassis: 18 slot, 3U, 8 GB/s
opt 900-932	Power cord options
M9021A	PCIe Cable Interface module (x8)
M9045A/B	PCIe ExpressCard Adapter (x1)
M9048A	PCIe Desktop Adapter (x8)
Y1200A	PCIe cable: x4 to x8, 2.0m (for use with M9045A)
Y1200B	PCIe cable: x4 to x8, 2.0m (for use with M9045B)
Y1202A	PCIe cable: x8, 2.0m (for use with M9048A)
Y1212A	Slot Blocker Kit
Y1213A	PXI EMI Filler Panel Kit: 5 single-slot
Y1214A	Air Inlet Module Kit
Y1215A	Rack Mount kit for the M9018A

Appendix B: Chassis Specifications

This appendix lists the key chassis specifications. For more detailed specifications, please see the Keysight M9018A Data Sheet available at www.keysight.com/find/M9018A.

Safety

Complies with European Low Voltage Directive 2006/95/EC
- IEC/EN 61010-1, 2nd Edition - Canada: CSA C22.2 No. 61010-1-04 - USA: UL Std No. 61010-1, 2nd Edition
EMC
This ISM device complies with Canadian ICES-001. Cet appareil ISM est conforme a la norme NMB du Canada.

Operating conditions

Indoor/outdoor	Ambient Temperature	Humidity	Altitude*
For indoor use only	0 °C to 55 °C	Maximum relative humidity 80% for temperatures up to 31 °C, decreasing linearly to 50% relative humidity at 40 °C	Up to 3,000 meters

* This specification applies to Keysight M9018A chassis serial numbers TW52460101 and later. Chassis with prior serial numbers were limited to 2000 meters.

CAUTION This product is designed for use in INSTALLATION CATEGORY II and POLLUTION DEGREE 2, per IEC 61010 Second Edition and 664 respectively.

Chassis weight and size

Weight	Size
13.4 kg (29.5 lbs)	444.4mm W x 191.8mm H x 466mm D (with feet installed) 444.4mm W x 177.8mm H x 466mm D (with feet removed)

AC power supply - Category II

	Voltage	Power
Operating voltage/power (low line)	100-120V, 1000W nom[1]	717.5 W DC Output Power[1]
Operating voltage/power (high line)	220-240V, 1200W nom	867.5 W DC Output Power
Input frequency	50/60 Hz	
Mains supply voltage fluctuations are not to exceed ±10% of the nominal voltage		
Transient overvoltages typically present on the Mains supply.		

1 Wklv#vshflilfdwlrq#dssolhv#wr#Nh|vljkw#P <34;D#fkdvvlv#vhuldo#qxp ehuv#WZ 85793434#dqg#dwhu#
Fkdvvlv#z lwk#sulru#vhuldo#qxp ehuv#dp lwhg#rz 0dqh#srz hu#wr#<33Z #qrp /#99:18#Z #GF#Rxwsxw#Srz hu1

DC supplies[1]

Voltage	Maximum Current[2]	Load Regulation	Maximum ripple and noise (20 MHz BW)
+3.3 V	60 A[3]	1%	1.5% (pk-pk)
+5 V	58.8 A	1%	1.5% (pk-pk)
+12 V	51.3 A[3, 4]	1%	1.5% (pk-pk)
-12 V	4 A[3]	1%	1.5% (pk-pk)
+5 Vaux	1.5 A	1%	50 mV (pk-pk)

[1] The maximum current from each supply is the same for both low-line and high-line inputs. However, the total power supplied for all rails (except 5 Vaux) must not exceed 710 W on low-line (100-120 Vac input)
[2] The total power supplied for all rails (except 5 Vaux) must not exceed 860 W.
[3] The total power supplied for 3.3 V, 12 V, and -12 V rails must not exceed 616 W.
4 For Keysight M9018A chassis with serial numbers before TW52460101, the maximum current allowed on the +12 V rail was 47.2 A.

PCIe cable connector and receptacle mating cycles

Connector on:	Maximum number of mating cycles:
Y1200A/B and Y1202A PCIe cables	250
M9021A Cable Interface module	250
M9045A/B ExpressCard Adapter	250
M9048A Desktop Adapter	250

Important safety information

To ensure comprehensive availability of chassis safety information, this section lists important warning and caution safety notices from the M9018A User Guide.

WARNING

- **This is a Safety Class 1 Product (provided with a protective earthing ground incorporated in the power cord). The mains plug shall only be inserted in a socket outlet provided with a protective earth contact. Any interruption of the protective conductor inside or outside of the product is likely to make the product dangerous. Intentional interruption is prohibited. Inspect the protective conductor periodically to ensure that it is uninterrupted.**
- **No operator serviceable parts inside. Refer servicing to qualified personnel. To prevent electrical shock, do not remove covers.**
- **To prevent electrical shock, disconnect the chassis power cord before cleaning. Use a dry cloth or one slightly dampened with water to clean the external case parts. Do not attempt to clean internally.**
- **Cleaning connectors with alcohol shall only be done with the chassis power cord removed and in a well-ventilated area. Allow all residual alcohol moisture to evaporate, and the fumes to dissipate prior to energizing the chassis.**

WARNING

Restoring the chassis PCIe switch fabric to its factory default configuration requires pressing a pushbutton internal to the chassis while the chassis is powered up. Only qualified, service-trained personnel shall be allowed to remove the instrument cover and actuate the pushbutton while the instrument is energized. High current and high energy source connectors are proximate to the pushbutton which could cause potential burns if short circuited.

WARNING

To prevent injury during rack mounting, the chassis should be empty of modules and two people should lift the chassis into the rack.

CAUTION

- Chassis should never be stacked on top of each other. To position chassis vertically, they should be rack mounted as described in this chapter.

- In preparing the chassis for rack mounting, do not stand the chassis on its side; the side handles can cause the chassis to tip over.

- Depending on the power consumed by the chassis, a 1U space may be required below the chassis to ensure adequate ventilation for cooling. Be sure to provide this space if required as described in this chapter.

myKeysight

www.keysight.com/find/mykeysight

A personalized view into the information most relevant to you.

www.axiestandard.org

AXIe

Advanced TCA® Extensions for Instrumentation and Test (AXIe) is an open standard that extends the Advanced TCA for general purpose and semiconductor test. Keysight is a founding member of the AXIe consortium.

www.lxistandard.org

LXI

LAN eXtensions for instruments puts the power of Ethernet and the Web inside your test systems. Keysight is a founding member of the LXI consortium.

www.pxisa.org

PXI

PCI eXtensions for Instrumentation (PXI) modular instrumentation delivers a rugged PC-based high-performance measurement and automation platform.

www.keysight.com/find/ThreeYearWarranty

Keysight's combination of product reliability and three-year warranty coverage is another way we help you achieve your business goals: increased confidence in uptime, reduced coat of ownership and greater convenience.

Keysight Assurance Plans

Keysight Advantage Services
www.keysight.com/find/AssurancePlans

Five years of protection and no budgetary surprises to ensure your instruments are operating to specifications and you can continually rely on accurate measurements.

www.keysight.com/quality

DEKRA Certified
ISO 9001:2008

Keysight Electronic Measurement Group DEKRA Certified ISO 90001:2008 Quality Management System

Keysight Channel Partners

www.keysight.com/find/channelpartners

Get the best of both worlds: Keysight's measurement expertise and product breadth, combined with channel partner convenience.

www.keysight.com
www.keysight.com/find/modular
www.keysight.com/find/pxi-switch

For more information on Keysight Technologies' products, applications or services, please contact your local Keysight office. The complete list is available at: www.keysight.com/find/assist

For other unlisted Countries:
www.keysight.com/find/contactus

This information is subject to change without notice
© Keysight Technologies 2014
Edition 7 September 2014

M9018-90001
www.keysight.com