LTR	REVISION	ERN	INITIAL	DATE
~			OS	2017-07-27

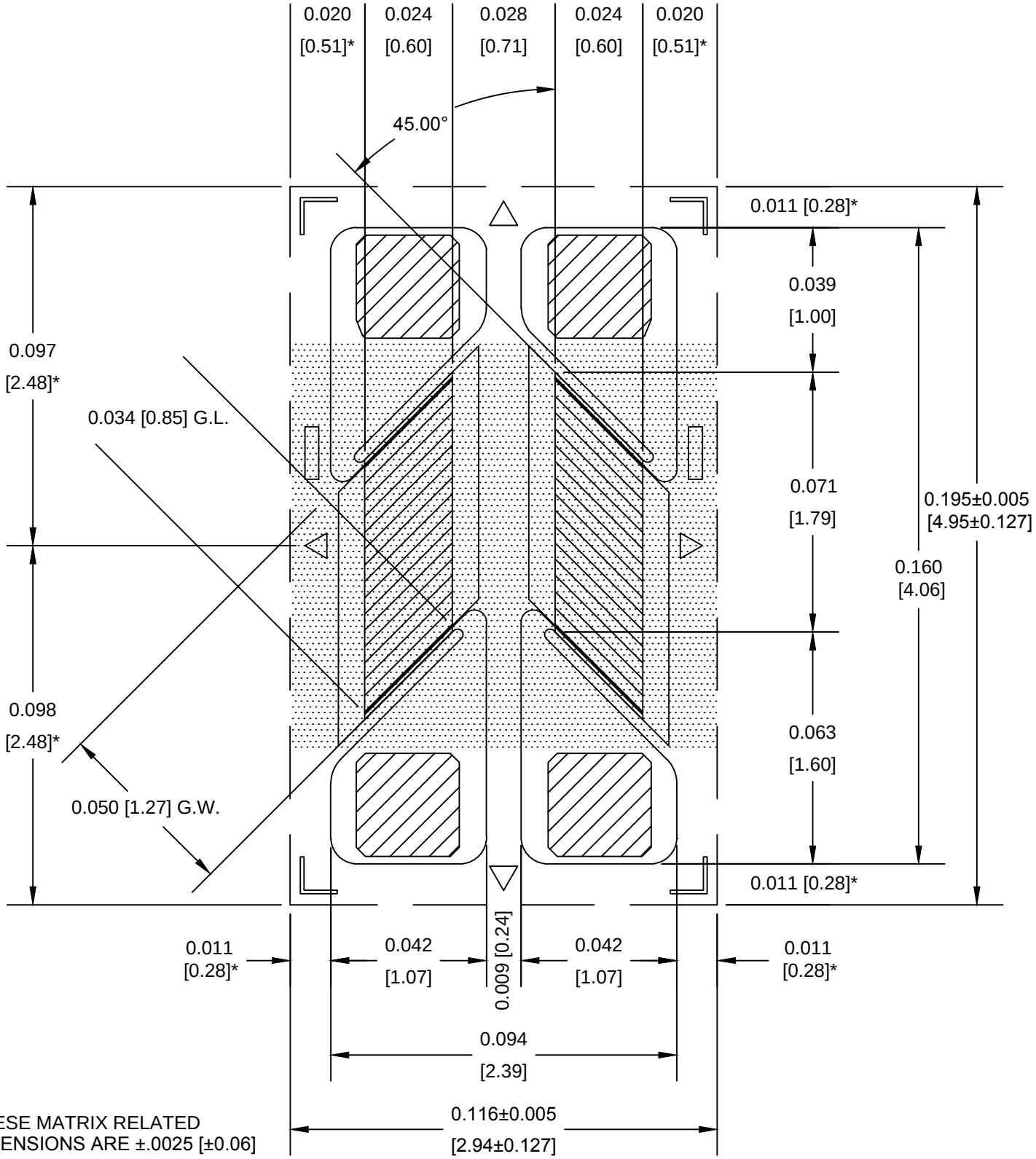

* THESE MATRIX RELATED DIMENSIONS ARE ±.0025 [±0.06]

THESE DRAWINGS/SPECIFICATIONS ARE THE EXCLUSIVE PROPERTY OF MICRO-MEASUREMENTS. THEY SHALL NOT BE REPRODUCED OR COMMUNICATED TO OTHERS, IN WHOLE OR IN PART, NOR BE USED AS A BASIS FOR MANUFACTURE OR SALE OF THE ITEMS REPRESENTED, WITHOUT THE WRITTEN PERMISSION OF MICRO-MEASUREMENTS.

Micro-Measurements
Raleigh, North Carolina USA

S5278 PATTERN LAYOUT

CONSTRUCTION:	OPTIONS:
N2K, N5K	E5, DG
RESISTANCE:	REFERENCE:
500±0.2%	

DRAWN BY:	DATE:	SCALE:	ALL DIMENSIONS ARE IN INCHES [mm].
OS	2017-07-27	N.T.S.	
PROJ. ENG.	DATE:	DWG. #	REVISION:
AH	2017-07-27	MS-S5278-10454	~