FEATURES

- 5-phase & 8-phase dual output PWM Controller
- Phases are flexibly assigned between Loops 1 & 2
- Intel VR12 SVID Interface with Gamer Override
- Input Voltage Management for up to 3 Input Voltages
- Phase Current Capture Mode
- Phase Switching frequency from 200kHz to 1.2MHz
- CHiL Efficiency Shaping Features including Variable Gate Drive, Dynamic Phase Control
- Programmable 1-phase or 2-phase for Light Loads and Active Diode Emulation for Very Light Loads
- CHiL Adaptive Transient Algorithm (ATA) minimizes output bulk capacitors and system cost
- Designed for use with coupled inductors
- Auto-Phase Detection with auto-compensation
- Per-Loop Fault Protection: OVP, UVP, OCP, OTP
- I2C/SMBus/PMBus system interface for telemetry of Temperature, Voltage, Current & Power for both loops
- Non-Volatile Memory (NVM) for custom configuration
- Compatible with CHiL ATL and 3.3V tri-state Drivers
- +3.3V supply voltage; 0ºC to 85ºC ambient operation
- Pb-Free, RoHS, 6x6 40pin & 8x8 56pin QFN packages

DESCRIPTION

The CHL8255/8 are dual-loop digital multi-phase buck controllers with an Intel VR12 interface. The CHL8255 drives up to 5 phases and the CHL8258 drives up to 8 phases. They feature Input Voltage Management allowing up to 3 input voltages to be monitored to ensure adequate power is delivered to the load.

The CHL8255/8 NVM saves pins and enables a small package size.

The CHL8255/8 includes the CHiL Efficiency Shaping Technology to deliver exceptional efficiency at minimum cost across the entire load range. CHiL Variable Gate Drive optimizes the MOSFET gate drive voltage as a function of real-time load current. CHiL Dynamic Phase Control adds and drops active phases based upon load current. The CHL8255/8 can be configured to enter 1-phase operation and active diode emulation mode based upon load current or by command.

CHiL's unique Adaptive Transient Algorithm (ATA), based on proprietary non-linear digital PWM algorithms, minimizes output bulk capacitors. In addition, a coupled inductor mode, with phases added/dropped in pairs enables further improvement in transient response and form factor.

The I2C/PMBus interface can communicate with up to 16 CHL8255/8 based VR loops. Device configuration and fault parameters are easily defined using the CHiL Intuitive Power Designer (IPD) GUI and stored in on-chip NVM.

The CHL8255/8 provides extensive OVP, UVP, OCP and OTP fault protection and includes thermistor based temperature sensing with VRHOT signal.

The CHL8255/8 includes numerous features like register diagnostics for fast design cycles and platform differentiation, simplifying VRD design and enabling fastest time-to-market with its "set-and-forget" methodology.

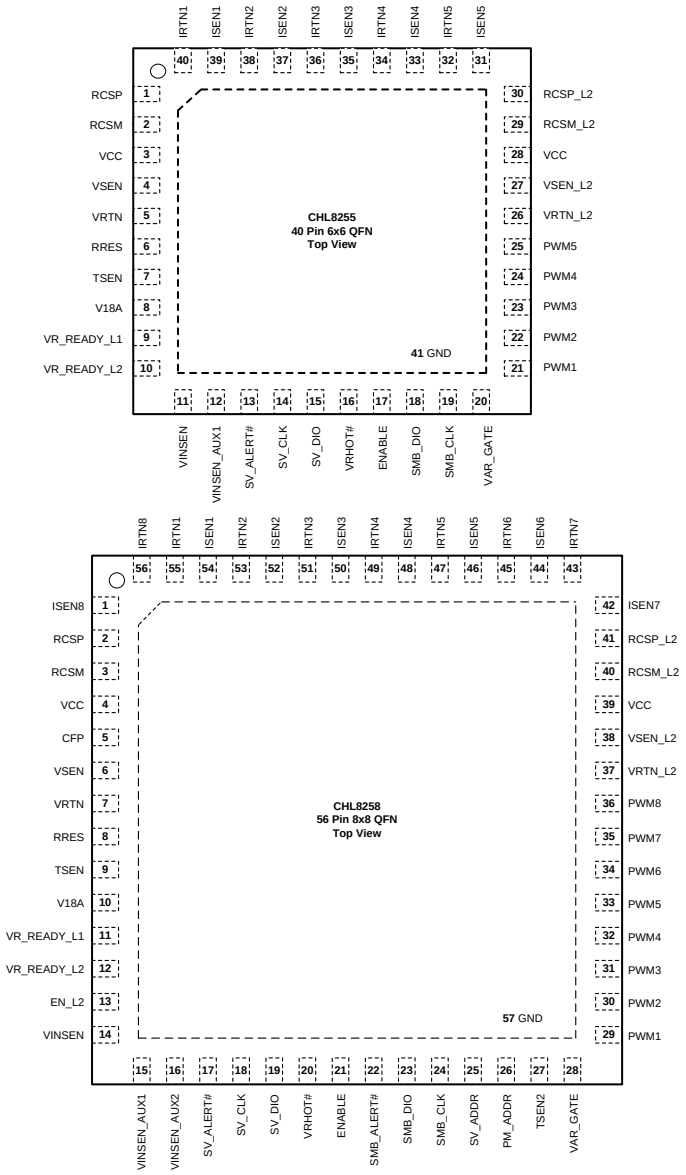

Figure 1: CHL8255 & CHL8258 Packages

APPLICATIONS

- Intel GPU systems

Trademarks and registered trademarks are the property of the respective owners.
PB0015, Rev 1.0, October 7, 2010

One Highwood Drive, Tewksbury, MA 01876
Tel: +1(978) 640-0011
www.chilsemi.com
© 2010 CHiL Semiconductor Corp. All rights reserved

TYPICAL APPLICATIONS BLOCK DIAGRAM

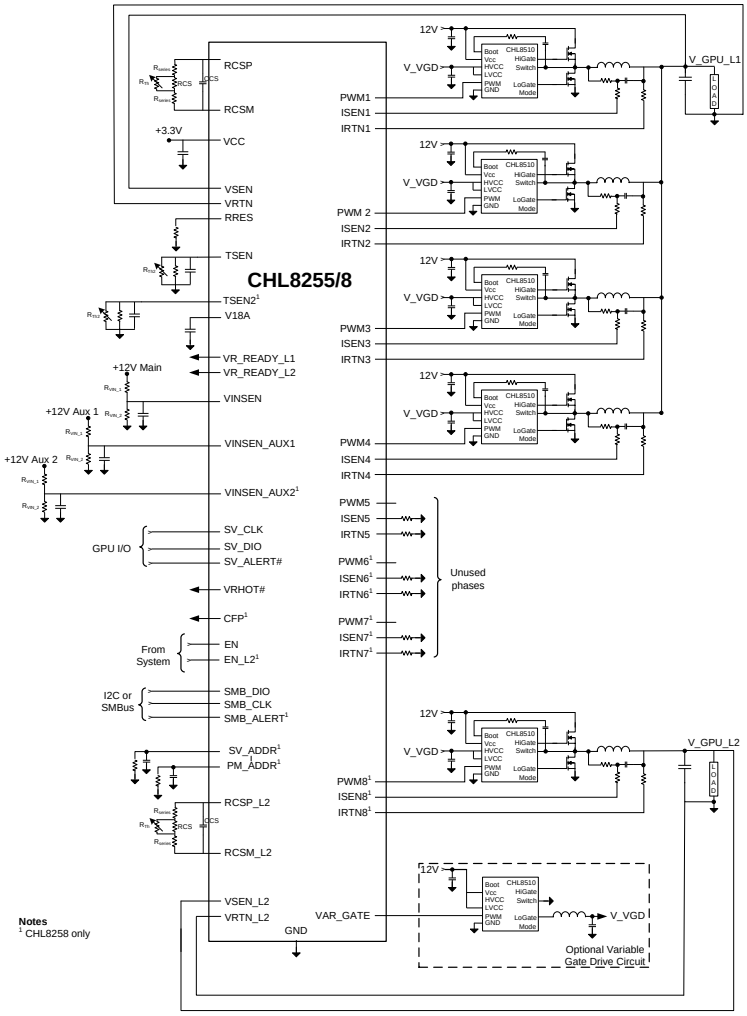

ORDERING INFORMATION

CHL825 □ - □ □ □ □ □

- T: Tape & Reel
- Package type
  - R : QFN
- Operating Temperature
  - C: Commercial Standard
- xx: Configuration file
- Part
  - 5: CHL8255
  - 8: CHL8258

Package	Tape & Reel Qty	Part Number
QFN	3000	CHL8255-00CRT[1]
QFN	3000	CHL8255-xxCRT[2]
QFN	3000	CHL8258-00CRT[1]
QFN	3000	CHL8258-xxCRT[2]

Notes

1 For unprogrammed/default parts, use configuration file 00. Unprogrammed parts will not start up until programmed in order to insure a safe power up.

2 -xx indicates a customer specific configuration file.